MODEL ENGINEER

Vol. 195 No. 4261

25 November - 8 December 2005

75TH MODEL ENGINEER EXHIBITION

29-31 December

SANDOWN PARK
ESHER
SURREY

CURLY BOWL

NEW I/C ENGINE

LETTERS TO A GRANDSON

VOL 195 NO 4261 £2.50
9 770026 732131 61>
HIGHBURY

Model Engineer is published by
Highbury House Communications Plc
Berwick House, 8-10 Knoll Rise, Orpington, Kent BR6 0EL

EDITORIAL

Editor
David Carpenter (01689-887255)
Technical Editor
Neil Read (01604-833670)
Production Editor
Kelvin Barber
Associate Editor
Malcolm Stride
Technical Consultants
Mike Chrisp
Stan Bray,
J. Malcolm Wild FBHI,
D. A. G. Brown
Editorial Administrator
Rachel Homer (01689-886677)

PRODUCTION

Design
Carol Philpott
Production Manager
Dave Osborne
Printed by
Polestar (Colchester)
Origination by
Atelier Data Services

SALES & MARKETING

Group Sales Manager
Colin Taylor (01689-886649)
Sales Manager
Tony Robertson (01689-886650)
Subscription Marketing Executive
Seema Kumari (01689-887209)

CIRCULATION

Circulation Director
Owen Arnot - 01202 200218
Non-newstrade Distribution
Mike Reynolds-Jones
(0121-788-3112)

MANAGEMENT

Publisher
Jez Walters
Group Financial Controller
Tom Stringer

SUBSCRIPTIONS & BACK ISSUES

Direct Subscriptions and Back Issues are available from Model Engineer, Tower House, Sovereign Park, Market Harborough, Leics. LE16 9EF
Order hotline: 0870 8378600; Customer Service: 0870 8378668
Email: modelengineer@subscription.co.uk
(Operating hours: 8am-9.30pm Mon-Fri; 8am-4pm Sat.)
Rates for 26 issues (annual):
UK: £65.00 Europe: £80.00 US Airmail: $130.00
RoW Airmail: £86.00
Cheques payable to Highbury House Communications Plc
Second class postage paid at Rahway NJ USA.
Postmaster, please send address corrections to Model Engineer c/o Mercury Airfreight International Inc, 2323 Randolph Avenue, Avenue 1, NJ 07001. Usps 0011099.
US Subscription Agent: Wise Owl Worldwide Publications, 5150 Candlewood Street, Suite #1 Lakewood, CA 90712-1900, USA
Phone: 562-461-7574; Fax: 562-461-7212.
Email: info@wiseowlmagazines.com
Website: www.wiseowlmagazines.com
Visa/MC/Discover accepted.
Canadian Distribution by Gordon & Gotch Periodicals (Toll free 1-800-438-5005).
Model Engineer is published fortnightly.

© Highbury House Communications Plc
2005
All rights reserved
ISSN 0026-7325

The Publisher's written consent must be obtained before any part of this publication may be reproduced in any form whatsoever, including photocopiers, and information retrieval systems.

All reasonable care is taken in the preparation of the magazine contents, but the publishers cannot be held legally responsible for errors in the contents of this magazine or for any loss however arising from such errors, including loss resulting from negligence of our staff. Reliance placed upon the contents of this magazine is at readers' own risk.

IN THIS ISSUE

● Vol. 195 No. 4261 25 NOVEMBER 2005

SMOKE RINGS
Editorial news, views and comment.
PAGE 609

POST BAG
Letters to the Editor.
PAGE 610

LBSC MEMORIAL BOWL
Neil Read reports on one of the most enjoyable events in the model engineer's calendar, the Curly Bowl.
PAGE 612

FRENCH GREAT WHEEL SKELETON CLOCK
Ian Beilby concludes the construction of a most attractive clock, including how to obtain a good finish on the parts.
PAGE 614

LETTERS TO A GRANDSON
Adrian continues his education with a lesson from M. J. H. Ellis about length standards and the value in the workshop of the spirit-level
PAGE 617

I/C TOPICS
Nemett writes about an exciting new single cylinder 4-stroke engine designed to be within the compass of all model engineers.
PAGE 618

POWER SLOTTING ATTACHMENT
D.L. Walters describes a useful slotting attachment for Myford lathes which can be adapted to suit other makes.
PAGE 620

SPOTTER SCOPE
Useful, easy to make device.
PAGE 623

ANNA
A practical tender for this large scale Manning Wardle locomotive.
PAGE 625

BUILD YOUR MODEL WITH FORESIGHT
Mick Appleyard give some really useful hints about workshop practice to avoid difficulties.
PAGE 629

RHOMBIC HOT AIR ENGINE
Les Kerr describes a fascinating hot air engine with a visible rhombic drive.
PAGE 632

MG TC
Stephen Atkinson describes how to make some of the trim of the 1940s model MG sports car.
PAGE 634

On the cover ...

Michael Law and his nicely turned out Juliet take a preliminary lap, before handing over to the judges in the LBSC Memorial Bowl Competition held at the Winterfields Railway of the Bedford Model Engineering Society. The Juliet took the top prize, despite a derailment. However, the judges had seen enough to make this version of LBSC'S little 0-4-0 a clear winner. Michael actually started making this locomotive when he was just 12 years old, and came back to finish it in the 1990s.

(Photograph by Neil Read)

LILLIAN
Keith Wilson gives more advice on building his narrow gauge creation, and more.
PAGE 637

ELECTRONIC BOILER CONTROL
An invaluable device for ship modellers.
PAGE 641

CLUB PROFILE - ROCHDALE
Junior members are one of the factors contributing to the continuing success of this friendly club.
PAGE 643

STEPHENSON'S VALVE GEAR
Don Ashton gives a defintive description of locomotive links for Stephenson's valve gear.
PAGE 644

CLUB DIARY
Recent activities and forthcoming events.
PAGE 645

75th MODEL ENGINEER EXHIBITION 2005
Your entry form for the world's oldest and finest model engineering exhibition.
PAGE 646

TURN TO PAGE 646 FOR DETAILS OF THE MODEL ENGINEER EXHIBITION

INDEX to ADVERTISERS

Arc Euro Trade	601	Jones and Bradburn	602
Camden	IFC	Maxitrak	600
Chester	OBC	Meridienne	601
Chronos	608	MEX Rules	648
Classified	648-653	Peter Clark	600
Compass House Tools	600	Polly Models	601
Entry Form MEX	644	REEVES 2000	654
G + M Tools	604	Stirling-Technik	601
Hemingway Kits	600	The Old Model Company	602
Home and Workshop	IBC	Xmas Subs Ad	606-607
Jade Products	600		

Jade Products 65 Ilmer Close
Rugby Warks. CV21 1TY
< Tel 01788 573056 >

JADE

Auto Darkening Welding Helmets

Vari Shade Range 9 - 13
External rotary control
12 month Warranty
After Sales-Spare Parts

CE quality marked
full EN379 & EN175
certification

Battery £54.95

Solar £67.95

Prices incl VAT
UK delivery £3.95
www.autodarkhelmet.co.uk

NEW! from maxitrak
5" Chaloner
from £2495

Maidstone Engineering Supplies
A complete range of materials
B.M.S. Brass. Phos Bronze. Copper. Stainless steel. Nuts & Bolts. Nylon. St/Tube. Screws. Studding. Rivets. Drills.Reamers. etc.

PROMPT MAIL ORDER

CATALOGUE £3.50
CATALOGUE £1.00

www.maxitrak.co.uk

MAXITRAK/M.E.S 10 Larkstore Park Lodge Road Staplehurst Kent
TN12 0QY Tel : 01 580 893030 Email : info@maxitrak.co.uk

Hemingway Kits, 126 Dunval Road, Bridgnorth, Shropshire WV16 4LZ, UK
WORKSHOP ACCESSORY KITS
Tel/Fax: +44 (0)1746 767739
Email: kirk@hemingwaykits.fsnet.co.uk
Website: hemingwaykits.com

BUILD YOUR OWN £30.44 (UK P&P £6.25)

REAR TOOL POST

George Thomas' uniquely versatile & practical design, suitable for the Super 7 Lathe. Turret indexes in seconds. Max capacity 2" (50mm)

Kit includes castings, fasteners and springs together with all steel required for both G H Thomas and Riley turrets

We are BACK! - Largest range of classic designs now with unrivaled Stocks and Service

Send £2 (refundable) for our latest Workshop Catalogue or visit our updated website

Hemingway

COMPASS HOUSE
MODEL ENGINEERING

5" Gauge Class 23
"Baby Deltic"
Features
4 Axle hung motors
Sprung bogies
Electronic controller
*Ready to Run**
From £1495.00

BATTERY ELECTRIC LOCOMOTIVES
7¼" Gauge Class 35 *"Hymek"*

With its four axle hung 280 watt motors and 150 amp electronic controller our *"Ready to run* Hymek"* will pull a three car train all afternoon!

From only £2995.00 on the track!

*Requires two batteries *Not included*

Colour Catalogue £2.50 Post paid
HIGH STREET, ROTHERFIELD, EAST SUSSEX, TN6 3LH, UK
PHONE: 01892 852968 - 07711 717067
www.compass-house.co.uk
E-Mail: sales@compass-house.co.uk

Highest Prices Paid For
Railway Relics

CANONBIE Totems EDENBRIDGE TOWN

£400 Min. Substanially more for classic locations

Posters

Locomotive Plates
Highest prices for nameplates, smokeboxes & workplates. Up to £2,500 for GWR cabsides

Carriage Prints
Up to £150 offered

Cast Iron/Enamel Signs
Especially from smaller companies

Clocks

Signalling Items & Handlamps
Tablets, Key Tokens, Shelfplates etc.

Tickets, Handbills & Paperwork
Any quantities considered

IMMEDIATE COLLECTION & SETTLEMENT ANYWHERE IN U.K.
FREE VALUATIONS INCLUDING PROBATE/INSURANCE

PETER CLARK 01788 521491
9 Manor Road, Leamington Spa CV32 7RJ

Arc Euro Trade - December Offers

Unbeatable Value Engineering Products by Mail Order

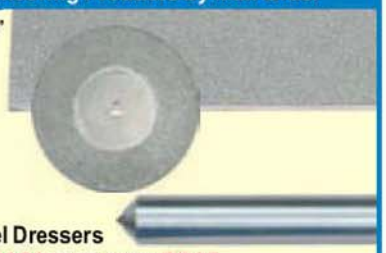

Diamond Stones 6"x2"x¼"
#300: £3.50
#600: £3.50
#1200: £3.50

Diamond Discs (4 pack)
ø22mm: £2.00
ø40mm: £2.95

Single Point Diamond Wheel Dressers
0.25 carat: £3.00, 0.5 carat: £4.00, 0.75 carat: £5.00

Offer prices valid until 31-12-05 (while stocks last). P&P extra. VAT included.

Order on-line at: **www.arceurotrade.co.uk**

Or phone for our catalogue
Tel: 0116 269 5693
10 Archdale Street, Syston, Leicester, LE7 1NA

Arc Euro Trade

Polly Model Engineering Limited

Incorporating Bruce Engineering

For all your model engineering requirements.

POLLY MODEL ENGINEERING LIMITED

Manufacturers of the renowned **Polly 5"** gauge passenger hauling, coal fired steam loco kits, which are easily assembled with hand tools and minimal skill. Polly loco kits provide an ideal introduction to the model engineering hobby. Latest **Polly VI** illustrated, **kit price only £5995 inc VAT.**

Manufacture is complemented by our Bruce Engineering Model Supplies business, giving a comprehensive range of steam fittings, accessories, materials, books, etc. We specialise in supply of quality injectors (JC, Chiverton), pressure gauges, etc.

Stationary engine kits: we produce a wide range of over 45 different models, including designs by Anthony Mount, our own large R&B gas engine, etc., and supply the full range of **Stuart Models.**

Practical Scale: Drawings, Castings, lost wax parts, laser cut frames, CNC rods, CNC platework, etc for the range of locos designed by Neville Evans and serialised in Model Engineer.

See us at exhibitions or find these & other items in our Supplies Catalogue £1.75 posted UK $5 worldwide
Polly Loco Kit Catalogue £3 Stuart Models Catalogue £5

Polly Model Engineering Ltd (Inc.Bruce Engineering)
Bridge Court, Bridge St., Long Eaton. Nottingham, NG10 4QQ
tel. 0115 9736700 fax 0115 9727251
www.pollymodelengineering.co.uk

VISA MasterCard

London Model Engineering Exhibition 2006

10th Great Year

LME'06

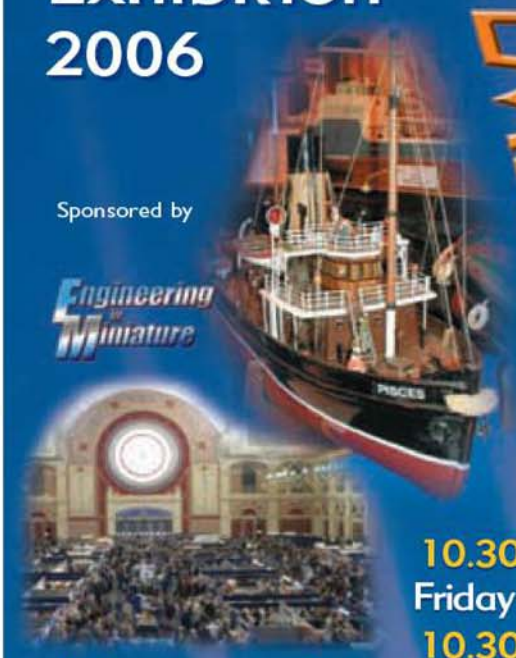

Sponsored by

Engineering in Miniature

10.30am – 6.00pm
Friday and Saturday
10.30am – 5.00pm
Sunday
(Last Admissions 4pm)

Alexandra Palace

Great Hall
20th, 21st, 22nd January 2006

Free Car Parking

Travel by rail to Alexandra Palace station or by underground to Wood Green.
Courtesy buses from Alexandra Palace car park.

Alexandra Palace

FOR FURTHER INFORMATION & QUEUE BUSTER TICKETS SEE OUR WEBSITE : WWW.LONDONMODELENGINEERING.CO.UK OR TEL: 01926 614101

QUEUE BUSTER ADVANCE TICKETS

Save £££'s by booking before 4th January

	Discount	No. of tickets	Full Price	No. of tickets
Adult	£8.00	☐	£9.00	☐
Senior Citizen	£7.00	☐	£8.00	☐
Child (5-14 incl)	£4.00	☐	£5.00	☐
Family Ticket 1 (1 adults and up to 3 children)	£12.00	☐	£14.00	☐
Family Ticket 2 (2 adults and up to 3 children)	£20.00	☐	£23.00	☐

After this date, full price tickets are available in advance until 9th January

Please supply tickets as indicated above at a total cost of £.....(please endose SAE)

Name ..... Address .....

.....

.....

Post Code ..... Daytime Telephone No. .....

I endose a cheque/P.O. payable to Meridienne Exhibitions Ltd.,
or please charge my ☐ VISA ☐ MasterCard ☐ Maestro

Card Number ☐☐☐☐ ☐☐☐☐ ☐☐☐☐ ☐☐☐☐ ☐☐

Start Date _ _ / _ _ Expiry Date _ _ / _ _ Issue No. _ _ _ ME

Card Security No. (last three digits on card signiture strip) _ _ _

Meridienne Exhibitions Ltd., The Fosse, Fosse Way, Leamington Spa, Warks, CV31 1XN
Tel: 01926 614101, Fax: 01926 614293
email: info@meridienne.co.uk www.meridienneexhibitions.co.uk

• Stationary Engines
• Materials
• Boilers

Founded 1906 by Mr Stuart Turner

• Marine Engines
• Steam Fittings
• Fixings

STUART MODELS

Workshop Machinery Models

Stuart Pillar Drill

The Stuart Pillar Drill is now available from stock. this is the second release from our range of workshop machinery models, and makes an elegant counter piece to our first release, the Stuart Engineering Lathe.

Stuart Pillar Drill
Set of castings materials, fixings and precut gears

£147.00 inc Postage & VAT

Stuart Engineering Lathe
Set of castings materials, fixings and precut gears

£149.00 inc Postage & VAT

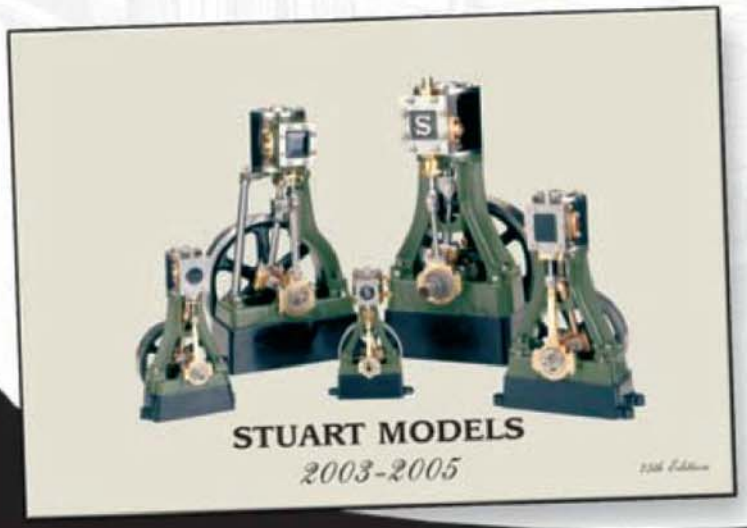

STUART MODELS
Full Colour Catalogue

The all new Stuart Models catalogue is now available, featuring many new models including our range of workshop machinery, which are available as Sets of Castings, Machined Kits and Ready to Run Models.

Please send £5.00 for our New Catalogue

STUART MODELS
• Dept. ME, Braye Road, Vale, Guernsey, UK, GY3 5XA •
• Tel 01481 242041 • Fax 01481 247912 • www.stuartmodels.com •

GLR DISTRIBUTERS INTRODUCTORY OFFER FOR THEIR NEW RANGE OF STATIONARY STEAM ENGINES

TINA
1" Bore x 1.1/2" Stroke - Slide Valve
Length of Baseplate 12" - Diameter of Flywheel 6"
Height 6"- Width 6" - Weight 4.1/2 Kilos
Complete with full building Manual, Drawings
and Materials (Hardwood base £15 extra)
All drawings are in Imperial
Unbeatable value at this price
£145.00 + £07.00 Carriage to mainland UK
All prices include vat

RACHEL
Unusual wall mounted Steam Engine, based
on drawings by
Otto Lilienthal of Germany in 1882
Cylinder 22mm bore x 40mm stroke
Flywheel 170mm dia. Machined by request.
All drawings are in Metric
Top quality Iron and Gunmetal castings
26 professional A4 drawings
Build this beautiful engine for just
£250.00 + £7.00 Carriage to mainland UK
All prices include vat

MULTI -TUBULAR BOILER KIT
Runs on Coal - Gas - Spirit
4" dia. x 16swg Copper tube - 8.1/2" high
25 5/16" x 20g Copper tubes
Firebox 3.1/2" dia. 3.1/2" long
Working pressure 80 psi.
Suitable for all above engines
£65.00 + Carriage £7.00 to mainland UK
Set of 6 Fittings £85.00
All prices include vat

SUZANNE
Beautiful Vertical Steam engine used in
Dresden, Germany in the 19th century.
Redrawn by Willie Schneeberger of Switzerland
Top quality Iron and Gunmetal castings
20 professional A4 metric drawings
Cylinder 30mm Bore x 48mm Stroke
Flywheel 180mm. Machined by request.
This fantastic engine can be built for just
£250.00 + £7.00 Carriage to mainland UK
All prices include vat

Pictures are illustrations of models when machined by our customers

GLR DISTRIBUTORS LTD. UNIT C1, GEDDINGS ROAD. HODDESDON, HERTS. EN11 0NT
Tel. 01992 470098 Fax. 01992 468700 E-Mail peteglr@btopenworld.com

A Workshop in your Garden

EASY SELF ASSEMBLY

- **Concrete construction**
- **Fire-resistant**
- **Maintenance-free**
- **Extensive range**

For a colour brochure call
01386 438 990
or visit
www.garages-sheds.co.uk

Leofric

Hillside House, Stratford Rd
Mickleton Glos GL55 6SR

OMC-2 Beam Engine

Based on original designs from 1836–1860 and working on 6v dc this fully working electro-magnetic engine kit represents how pioneers of the time, tried to mimic steam engine technology in their efforts to use the newly discovered phenomenon of electricity.

With over 140 parts to assembly and no machining or soldering necessary, this kit brings a satisfying learning experience for both adults and youngsters alike. **Made in England, our engine kits range from £99.87 inc. delivery.**

THE OLD MODEL COMPANY

PO Box 455 Chichester, West Sussex PO18 9ZH
Tel and Fax: 01243 575403
Email: oldmodels@btinternet.com www.oldmodels.co.uk

ChronoS Engineering Supplies

GRAND OPEN WEEKEND

25th – 26th – 27th November
Friday Saturday Sunday

- **MANY SPECIAL OFFERS**
- **DEMONSTRATIONS**
- **FREE GIFT FOR EVERY VISITOR**
- **REFRESHMENTS**

WIN A LATHE IN OUR FREE PRICE DRAW

PLENTY OF FREE PARKING AND
VERY NEAR TO THE A5 AND M1 (Junction 11)
OPEN FRIDAY 7am - 5pm SATURDAY 9am - 5pm SUNDAY 9am - 3pm

CHRONOS LTD - UNIT 14, DUKEMINSTER TRADING ESTATE, CHURCH STREET, DUNSTABLE, BEDS LU5 4HU
TEL (01582) 471900 (5 Lines) Email: sales@chronos.ltd.uk Web: www.chronos.ltd.uk

gandmtools

Probably the best website in the model engineering world

email: sales@gandmtools.co.uk web: www.gandmtools.co.uk

LATHES

Smart & Brown 1024 Toolroom Lathe, Tooled, 3ph...£1250.00
Pultra 1750 Bench Lathe, Drive Unit, Collets, Chucks, Tooling, 1ph,VGC £1500.00
Pultra 1750 Bench Lathe, Motor, Well Tooled, Collets,1ph, VGC....£1500.00
Pultra 1770 Bench Lathe c/w Handrest, Tailstock,10 Collets,No Motor....£ 350.00
Boxford AUD 4½" x 18" Lathe, Tooled, New Single Phase Motor Fitted £1250.00
Boxford CUD 4½" x 18" Lathe, 3 Jaw Chuck & Toolpost, 3ph ....£ 475.00
Boxford CUD 5" x 22" Lathe, Well Tooled, Single Phase, VGC £1450.00
Boxford Model A 4½" x 18" Lathe, Stand, Gearbox, PCF, Tooling, Single Phase....£1250.00
Myford Super 7 Bench Lathe,1ph....£ 575.00
Myford ML7 Lathe on Stand, 1ph, 3 Jaw & Toolpost£ 475.00
Myford ML7 Lathe on Stand, 1ph, 3 Jaw Chuck and Toolpost ....£ 450.00
Colchester Triumph 2000 Gap Bed Lathe, 7½" x 50", 3ph, Tooled £2500.00
Colchester Chipmaster 5" x 20" Lathe, Metric, Tooled, Quiet, VGC, 3ph ....£ 950.00
Colchester Bantam 1600 5" x 20", (Late Type) Chucks, Lever Op Collet Att, Coolant, QCTP, Guards, Light, Manual, 3ph, VGC....£2500.00
Colchester Bantam 1600 5" x 20" Tooled, Coolant, QCTP, VGC, 3ph £1450.00
Colchester Bantam, 800 5" x 20" Tooled, 3ph, Choice of 2, Each....£ 950.00
Harrison 280 CNC Manual/CNC Training Lathe, Faults £2000.00
Harrison M300 6" x 25" Gap Bed, Well Tooled Inc Lever Op Collet Chuck, 3ph £2750.00
Harrison M300 6" x 25" Gap Bed, Tooling Inc Taper Turning Att, 3ph £2500.00
Harrison 11" Centre Lathe and Tooling, 3ph....£ 750.00
Harrison 4½" x 25" Centre Lathe with Tooling, 3ph £ 750.00
Pultra 1770 Cabinet Mounted Micro Lathe, Drive Unit, Well Tooled, 3ph....£1250.00
Chester 920 Bench Lathe with Tooling, 1ph....£ 550.00

DRILLING MACHINES

Fobco Star Bench Drill,1ph....£ 200.00
Fobco 7 Eight Pillar Drill, 3ph, VGC, Choice of 2 ....£ 575.00
Elliott Progress 1S Pillar Drill, 3ph....£ 150.00
Pollard Pillar Drill, 3ph....£ 75.00
Boxford Union Pillar Drills, Rack Op Table, 3ph....£ 325.00
Boxford Union Pillar Drill, 3ph, Excellent Condition £ 450.00
Thoka Arbo No 2 6 Station Turret Drill Head, 3MT ..£ 175.00
Spares Available for Fobco Star,7/8 and 10/8 Pillar & Bench Drills....£ POA
Startrite Mercury Bench Drill,3ph....£ 150.00
Clearance of Meddings, Startrite, Progress, Tauco, Fobco, Union Pillar & Bench Drills, Choice of 25 all Three Phase From....£ 35.00
Meddings Pacera Pillar Drill ....£ 325.00

MILLING MACHINES

Boxford 190VMC CNC Bench Mill, Tooled,1ph....£2250.00
Boxford 260VMC CNC Milling Machine, Tooled, 1ph, Stand £2500.00
Sixis Vertical/Horizontal Milling Machine, Tooled, 3ph £1250.00
Marlow Vertical Mill, 3ph, Power Feed, 3 MT Spindle ....£ 650.00
Aciera F3 Vertical/Hori Tolroom Mill, 3 Axis DRO, Well Tooled, 3ph....£9500.00
Tom Senior M1 Vertical/Horizontal Mill, 240 volt Single Phase, Requires Work!....£ 775.00
Bridgeport Varispeed Turret Mill, 42" x 9" Table, Power Feed, 3ph....£1250.00
Bridgeport Turret Mill, 3ph....£ 850.00
Alexander 2A Die Sinker/Engraver, Single Phase, 240 Volt, VGC ....£ 500.00
Adcock & Shipley Vertical Mill, 40 INT, 3ph....£ 450.00
Boxford 165HMC CNC Horizontal Machining Centre £1450.00
Burke Machine Tool Co. Small Horizontal Mill, Old.£ 250.00
BCA Jig Borer/Mill, Stand, Collets, 3ph....£ 975.00
Tom Senior Vertical Milling Head,2MT....£ 500.00
SIP Mill/Drill, NEW, 1ph, 3MT....£ 799.00
Stand For Above ....£ 145.00
Mikron 79 Gear Hobber....£ 450.00
Strausak Gear Hob Sharpener....£ 350.00
Alexander 2B 4 Spindle Engraver, 3ph ....£ 750.00
Bechler Pinion Leaf Cutting Machine....£ 300.00
AEW Viceroy Horizon Vertical Mill, Power Feed, 30 INT, Vice, 3ph....£1200.00

POWER HACKSAWS/BANDSAWS ETC

Axminster Power Tools Metal Cutting Bandsaw, 1ph£ 150.00
Startrite Metora 10" Cut Off Saw, 3ph....£ 375.00
Midhage HS804 Precision Circular Saw,150mm Blades, 3ph ....£ 250.00

GRINDERS, LINISHERS, POLISHERS

Victa Eagle Hand Feed Surface Grinder, Mag Chuck, Dual Dials, 3ph, VGC....£ 750.00
Alexander Single Lip Grinder, 3ph....£ 750.00
Christen 05-8 Drill Point Grinder, 3ph, VGC....£1250.00
Dronsfield Eagle Surface Grinder, Coolant Unit, Mag Chuck, 3ph....£ 550.00
Viceroy Double Ended Grinder, Pedestal Stand, 3ph, VGC ....£ 250.00
Christen 05-8 Drill Point Grinder,3ph, Lots of tooling.£1250.00
Brierley ZB25 Drill Point Grinder on Cabinet Stand, Some Tooling, 3ph....£ 750.00
Clarkson Radius Grinding Attachment....£ 275.00
Viceroy Double Ended Buffer/Polisher,3ph....£ 225.00
Turner 6" x 16" Heavy Duty Belt Linisher, Spare Belts, 3ph ....£ 500.00
Hauser Jig Grinder, Well Tooled, 3ph....£1750.00
Jones & Shipman 540 Surface Grinder, Mag Chuck, 3ph £1000.00
Canning 2HP Polishing Spindle, 3ph....£ 350.00

SHAPERS

Main Gear For Alba Shaper & Box of Other Spare Parts ....£ 100.00
Box Table & Other Parts for Elliott 10M Shaper LOTE 100.00

BOXFORD SPARES & TOOLING

Change Gears (Also Fit Southbends)

16T-£10,18T-£11,20T-£11.21T-£11,22T-£11,23T-£11,24T-£11,26T-£11,27T-£11,28T-£11,30T-£12,31T-£12,32T-£12,35T-£12,36T-£12,37T-£12,38T-£14,40T-£14,41T-£14,42T-£14,44T-£14,45T-£14,46T-£14,48T-£14,50T-£15,52T-£15,53T-£15,54T-£15,56T-£15,59T-£15,60T-£15,64T-£15,71T-£18,75T-£18,79T-£18,80T-£20,88T-£22,100T-£25,127T-£30,100/127T Compound Gear-£55,127/135T Compound Gear - £95.00, 54/18T Compound Gear-£30.00, 72/18T Compound Gea r- £35.00,
32T Tumbler Reverse Gear....£ 12.00
Boxford Manual "Know Your Lathe" New Copies & Drawings & Parts List....£ 25.00
Boxford 4" Chuck Backplate, Drilled, Used....£ 10.00
Boxford 5" Chuck Backplates, New....£ 20.00
Boxford 5" Catchplate....£ 15.00
Pratt Burnerd 4" 4 Jaw Chuck....£ 75.00
Toolmex 6" 4 Jaw Independent Chuck Fitted Boxford Backplate,NEW....£ 155.00
Boxford Lathe Cabinets, Cupboards, Coolant Tank, Tray Ideal for Many Small Lathes....£ 100.00
Headstock, Saddle & Apron Parts Available....£ POA
4½" & 5" Tailstocks....£ 125.00
Boxford Change Gear Cover....£ 40.00
Boxford Change Gear Quadrant....£ 15.00
Boxford Topslide Assembly....£ 45.00
Boxford T-Slotted Boring Table, 8½" x 7", Fits in Place of Cross Slide, NEW....£ 135.00
Boxford Power Crossfeed Saddle Assembly....£ 250.00
Boxford T-Slotted Cross Slide, NEW, Fits AUD, BUD, CUD, TUD, Models A,B & C....£ 125.00
Boxford Taper Turning Attachment,Complete....£ 300.00
Boxford Screw Cutting Gearbox & Leadscrew....£ 375.00
Boxford Cross Slide Stop....£ 25.00
Boxford Cut Off Slide....£ 250.00

MYFORD SPARES & TOOLING

Change Gears:

20T£7.00,21T£7.00,22T£7.00,24T£7.00,25T£7.50,26T£7.50,27T£7.50,28T£8.00,29T£8.00,30T£8.00,31T£8.50,32T£8.50,33T£8.50,34T£8.75,35T£9.00,36T£9.00,37T£9.50,38T£9.50,39T£9.50,40T£9.50,42T£9.75,43T£10.00,44T£10.00,45T£10.50,46T£11.00,47T£11.00,48T£11.00,50T£13.50,51T£13.50,53T£14.50,54T£14.50,55T£14.75,56T£15.00,57T£15.00,58T£15.00,59T£15.50,60T£15.50,61T£16.50,62T£16.50,63T£17.00,64T£17.00,65T£18.00,66T£18.50,70T£18.50,75T£19.50,80T£21.50,81T£21.50,85T£24.00,90T£24.00,91T£25.00,95T£26.00,100T£27.00,127T£35.00
Metric Conversion Set, Comprises Quadrant, Gears, Spacers and Studs, NEW....£ 185.00
Myford 3 Point Steady, NEW....£ 105.00
Myford 2 Point Steady, NEW....£ 45.00
Myford ML7 Long Cross Slide, NEW....£ 105.00
Myford Super Manual Inc Gearbox Info....£ 22.00
Toolmex 100mm 3 Jaw, Myford Mount, NEW....£ 125.00
Toolmex 160mm 4 Jaw Ind Chuck, Myford Direct Mount, NEW....£ 145.00
Myford 7" Faceplate....£ 30.00
Myford 9" Faceplate....£ 40.00
Myford 4½" Catchplate....£ 15.00
Myford 4" Chuck Backplate....£ 18.00
Myford 5" Chuck Backplate....£ 20.00
Myford MA73 V Block....£ 12.00
Myford Cross & Top Slide Fitted Single Toolpost, Late Type, Unused....£ 225.00
Myford Super 7 Tailstock....£ 175.00
Myford ML7 Saddle/Apron....£ 125.00
Myford ML7/Super 7 Lathe Bed (well used)....£ 40.00
Myford Super 7 Cabinet Stand with Cupboard, Rusty Bottom Edge, Long Bed....£ 200.00
Myford Super 7 Saddle,Apron & Cross Slide....£ 250.00
Myford Dividing Head & Tailstock, 2 Division Plates, Immaculate....£ 400.00
Myford Part No 1430 Series 7 Leadscrew Handwheel & Pointer....£ 25.00
Myford Rear Toolpost....£ 48.00
Myford Swivelling Vertical Slide....£ 225.00
Myford/Toolmex Quick Change Toolpost + 4 holders£ 115.00
Myford Quick Change Gearbox & Leadscrew....£ 575.00
Myford Handwheel Operated Cut Off Slide,with 2 Toolposts, VGC....£ 200.00

10 Assorted Slitting Saws
£25.00 plus vat.

Fobco Star Bench Drill, 1ph
£200.00 plus vat.

Marlco Chuck & 3 Collets
£65.00 plus vat.

Schaublin 13 Vertical / Horizontal Mill, 3ph, Digital Read Out, Vice, Chuck
£1500.00 plus vat.

Smart & Brown 1024 Centre Lathe, 3 & 4 Jaw Chucks, Faceplate, QCTP, Collets, 3ph
£1250.00 plus vat.

Moore & Wright Combination Set, Boxed, VGC
£65.00 plus vat.

Marlow Vertical Mill, Power Feed, 3ph, Dirty But In Good Condition **£650.00 plus vat.**

Vanco 1" Belt Linisher, 1ph, Selection of Unused Belts, VGC **£425.00 plus vat.**

Sixis 103 Vertical / Horizontal Mill, 30INT, Power Feeds, Chuck, 3ph **£1250.00 plus vat.**

Tesa Lever Clock
£45.00 plus vat.

All items are subject to availability. All items are subject to postage and packing and vat @ 17.5%.

Opening times Monday–Friday 9am–1pm & 2pm–5pm. Saturdays 9am–1pm only

G AND M TOOLS, THE MILL, MILL LANE, ASHINGTON, WEST SUSSEX, RH20 3BX

emails: sales@gandmtools.co.uk web: www.gandmtools.co.uk

Telephone 01903 892510 fax 01903 892221

75

THE 75TH EXHIBITION

THE MODEL ENGINEER EXHIBITION

Sandown Park, 29-31 December 2005

COMPETITION DISPLAYS

WORLD CLASS MODELS FREE DAILY LECTURES

TRADE STANDS CLUBS AND SOCIETIES

OPENING TIMES

29.12.05	10AM TO 5PM
30.12.05	10AM TO 5PM
31.12.05	10AM TO 3PM

Prices

	On The Door	Advance*	Group**
ADULT 1 DAY	£8.00	£7.00	£6.00
CONCESSIONS 1 DAY	£7.00	£6.00	£5.00
CHILDREN 1 DAY (From 5-15 yrs)	£4.00	£3.50	£2.50
FAMILY 1 DAY (2 Adults & up to 3 children)	£18.00	£15.50	N/A
ADULT 2 DAY	£12.50	£10.50	N/A
CONCESSIONS 2 DAY	£10.50	£8.50	N/A
CHILDREN (from 5-15 yrs) 2 DAY	£4.50	£4.00	N/A

* The advance ticket line closes 16th December 2005.

** Group bookings only available in advance. One ticket free per 10 ordered.

TICKET HOTLINE 0870 1295 040

WWW.MEEX.CO.UK

All attractions correct at time of going to press, but may be subject to change or cancellation.

Get Xtra This Xmas!

Up to 10% Discount and a Free CD

Practical Woodworking
~~£43.00~~ £39.00 (13 issues)

The Woodworker
~~£44.20~~ £40.00 (13 issues)

Model Engineer
~~£65.00~~ £58.00 (26 issues)

Model Engineers' Workshop
~~£30.00~~ £27.00 (8 issues)

Military Modelling
~~£53.00~~ £48.00 (15 issues)

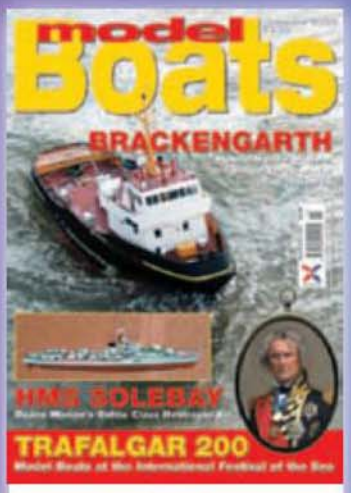

Model Boats
~~£40.00~~ £36.00 (12 issues)

RCM&E
~~£42.00~~ £38.00 (12 issues)

Crafts for Children
~~£20.00~~ £18.00 (6 issues)

Popular Patchwork
~~£44.00~~ £40.00 (12 issues)

Crazy Crafts
~~£33.00~~ £30.00 (12 issues)

Gardens Monthly
~~£40.00~~ £36.00 (12 issues)

Free CD with every subscription!

SUBSCRIBE NOW AND CHOOSE YOUR FREE CD!

Take advantage of this amazing offer when you subscribe to any of our titles – not only will you receive your favourite magazine delivered to your door, but you will also receive a FREE CD of your choice! Choose from:

CD1 STRICT TEMPO
Brush up your Ballroom skills with 60 great dance melodies to full Ballroom specifications, performed by the Platinum Dance Orchestra. Includes a step-by-step dance guide.

CD2 20 MAGICAL SONGS FROM ANDREW LLOYD WEBBER
A superb selection of Andrew Lloyd Webber hits from musicals including Evita, Jesus Christ Superstar and Phantom of the Opera, performed by the Showtime Orchestra and Singers.

CD3 SERENADES SUR PARIS
Conjure up Parisian Café life between the wars with 25 tracks from stars like Edith Piaf, Charles Trenet, Maurice Chevalier, Tino Rossi, Yves Montand, Fernandel and many others.

CD4 HOOKED ON CLASSICS
An amazing 80 classical favourites from the Royal Philharmonic Orchestra, including works by Mozart, Bach, Tchaikovsky and others.

CD5 THE RAT PACK
20 great hits from show-biz legends and three of the greatest entertainers of the 20th century – Dean Martin, Frank Sinatra and Sammy Davis Jr..

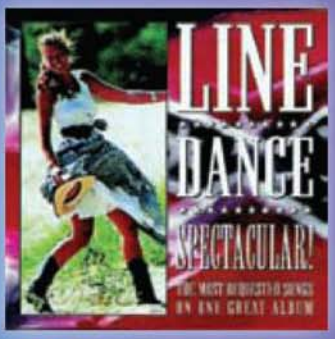

CD6 LINE DANCE SPECTACULAR
15 of the most requested Line Dance songs performed by the Dockery Boys, George Moody and the Country Squires.

CD7 JAZZ BRITANNIA
20 of the finest original Trad Jazz recordings by Kenny Ball, Acker Bilk, Chris Barber, Bob Wallis, Terry Lightfoot, Ian Menzies, Sandy Brown, and many more.

CD8 CHILDREN'S PARTY
22 favourite party songs, including Baby One More Time, Agadoo, DISCO, Saturday Night, Barbie Girl, Tragedy, Teletubbies Say Eh-Oh, YMCA, Just A Little Bit and many more.

Christmas subscription hotline: 0870 837 8600 (Quote ref X020)

YES! I would like to subscribe to (UK only*):

- ☐ Practical Woodworking
- ☐ The Woodworker
- ☐ Model Engineer
- ☐ Model Engineers' Workshop
- ☐ Military Modelling
- ☐ Model Boats
- ☐ RCM&E
- ☐ Gardens Monthly
- ☐ Crafts for Children
- ☐ Crazy Crafts
- ☐ Popular Patchwork

FREE CD: (Please select one per subscription ordered):

- ☐ Strict Tempo (CD1)
- ☐ 20 Magical Songs from Andrew Lloyd Webber (CD2)
- ☐ Serenades sur Paris (CD3)
- ☐ Hooked on Classics (CD4)
- ☐ The Rat Pack (CD5)
- ☐ Line Dance Spectacular (CD6)
- ☐ Jazz Britannia (CD7)
- ☐ Children's Party (CD8)

(CD will be sent to subscription purchaser)

HIGHBURY

PLEASE RETURN COMPLETED FORM TO:
Christmas Offer, Tower House, Sovereign Park, Market Harborough, Leic. LE16 9EF

For any queries on this offer please call our customer services on 0870 837 8668 or visit www.subscription.co.uk/help/highbury

Offer Ends 31st December 2005
Photocopies of this page are acceptable

Terms & conditions: *UK offer only. Offer valid until 31st December 2005. For Christmas gift subscriptions the recipients will receive the first available issue on sale after Christmas. Offer subject to availability.

Is this a renewal of a current subscription? ☐ Yes ☐ No

YOUR DETAILS

Title ..... First name .....
Surname .....
Address .....
Post code ..... Tel .....

RECIPIENT'S DETAILS (For gift subscriptions)

Title ..... First name .....
Surname .....
Address .....
Post code ..... Tel .....

PAYMENT DETAILS

I enclose a cheque/postal order for £ .....
(made payable to Highbury House Communications Plc)
Please charge my credit card for £ .....
☐ Visa ☐ Amex ☐ Mastercard ☐ Switch
Cardholder's name .....
Card no. ☐☐☐☐☐☐☐☐☐☐☐☐☐☐☐☐
Expiry date ..... Issue no ..... Valid date .....

Signature .....

☐ Please tick this box if you do not wish to receive any further information from HHC Plc
☐ Please tick this box if you do not wish to receive any further information from third party companies selected by us

X020

ChronoS
ENGINEERING SUPPLIES

See us at the London Model Engineer Shows
at Sandown 29th – 31st December and
Alexandra Palace 20th – 22nd January 2006

Online Catalogue – www.chronos.ltd.uk

PHONE FOR OUR FREE 8–PAGE XMAS GIFT IDEAS LEAFLET!!

TOS SELF CENTERING CHUCKS

3JAW SC

Code	TYPE	PRICE
XP66	80MM	£56.95
XP67	100MM	£62.95
XP68	125MM	£69.95

4JAW SC

Code	TYPE	PRICE
XP69	80MM	£69.95
XP70	100MM	£72.00
XP71	125MM	£79.00

PART MACHINED BACKPLATES

Code	SIZE	TO SUIT	PRICE
XP78	4"	MYFORD	£17.50
XP79	5"	MYFORD	£18.50
XP80	5"	BOXFORD	£18.50

1 KG CASE HARDENING COMPOUND

Code MX30D
~~£24.95~~
£19.95!!

0-12BA TAP & DIE SET IN A WOODEN BOX

Code MX33 PRICE ~~£39.95~~ **£26.95!!**

8PC HSS BLACKSMITHS DRILL SETS

Code	SET	PRICE
MX50	9/16 - 1" C 1/16 INCREMENTS	£28.00
MX51	13-14-15-16-18-20-22 & 25MM	£28.00

SOBA 4" HZ/VT ROTARY TABLE

Code MX60

£72.00

SET OF TNUTS, STUDS ETC - CODE MX63 ~~£15.00~~ £12.00
NEW TAILSTOCK - CODE MX61Z £39.95!!

VERTEX BSO DIVIDING HEAD!!

Code XP17 PRICE ~~£255.00~~ **£194.00**

NEW - EXPANDING ARBOR SET

1/4 - 3/8 - 1/2 - 5/8 - 3/4 - 7/8 - 1" 11/4"

Code XP95 PRICE ~~£29.95~~ **£24.95**

PARRALLEL LATHE TEST BARS

Code	SIZE	PRICE	
MX183	1MT	~~£45.00~~	£35.00
MX184	2MT	~~£45.00~~	£35.00
MX185	3MT	~~£49.00~~	£37.00

DIGITAL MEASURING EQUIPMENT

Code	ITEM	PRICE	
MX150	6"/150MM CALIPER	~~£39.95~~	£15.95
MX151	4"/100MM CALIPER	~~£25.00~~	£29.00
MX152	DIAL GAUGE MET/IMP	~~£85.00~~	£45.00
MX153	DIAL TEST IND MET/IMP	~~£79.95~~	£69.00
MX154	MICROMETER 0.1"/O-25MM	~~£65.00~~	£55.00

ALUMIMIUM EDGE FINDER - NEW!!

WITH CLEAR RED LIGHT!

Code MX122 PRICE **£19.95** (16MM DIA)

NEW DCMT INDEXABLE LATHE TOOL SETS

SOBA - INDUSTRIAL QUALITY!!

Code	SHANK	PRICE
MX124	8MM	£52.50
MX125	10MM	£54.00
MX126	12MM	£62.00
MX127	16MM	£74.00
MX128	INSERT	£4.00

GLANZE INDEXABLE BORING TOOLS C/W 3 TIPS

Code	SHANK	PRICE	
GZ6	6MM	~~£26.95~~	£16.95
GZ8	8MM	~~£26.95~~	£16.95
GZ10	10MM	~~£26.95~~	£16.95
GZ12	12MM	~~£29.95~~	£17.95
GZ16	16MM	~~£31.95~~	£18.95

GLANZE INDEXABLE PROFILING TOOLS C/W 2 TIPS

Code	SHANK	PRICE	
PR06	6MM	~~£20.35~~	£17.95
PR08	8MM	~~£21.35~~	£18.95
PR010	10MM	~~£23.45~~	£21.00
PR012	12MM	~~£26.45~~	£25.00

GLANZE RH TURNING TOOLS C/W 3 TIPS

Code	SHANK	PRICE	
SCL6SP	6MM	~~£23.00~~	£16.00
SCL8SP	8MM	~~£23.00~~	£16.00
SCL10SP	10MM	~~£24.00~~	£17.00
SCL12SP	12MM	~~£26.95~~	£20.00

SETS OF 8 HSS LATHE TOOLS

Code	SHANK	PRICE	
MX79	6MM	~~£24.95~~	£22.50
MX80	8MM	~~£29.95~~	£28.00
MX81	10MM	~~£34.95~~	£32.00
MX82	12MM	~~£44.95~~	£40.00

LONG REACH PARTING TOOL WITH SMALL BLADE

Code MX78
£8.95

12MM SQUARE SHANK - 150MM LONG WITH A SPECIAL SMALL HSS BLADE 150MM LONG X 12MM WIDE BY 1.5MM THICK
IDEAL FOR MYFORD ETC

MINI BORING & THREADING SET

New!! Mini HSS internal Threading & Boring Set HSS 6mm Round Shank with a 9mm Square Split Holders.
IDEAL FOR MYFORD ETC

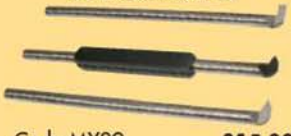

Code MX89 **£15.00**

ALL PRICES INCLUDE VAT & CARRIAGE (UK MAINLAND)

CHRONOS LTD UNIT 14, DUKEMINSTER ESTATE, CHURCH ST, DUNSTABLE, BEDS, LU5 4HU

TEL (01582) 471900 FAX (01582) 471920

WWW.CHRONOS.LTD.UK

EMAIL SALES@CHRONOS.LTD.UK

VISIT US AT OUR 6500 SQ FT PREMISES!!

SMOKE RINGS
With the Editors

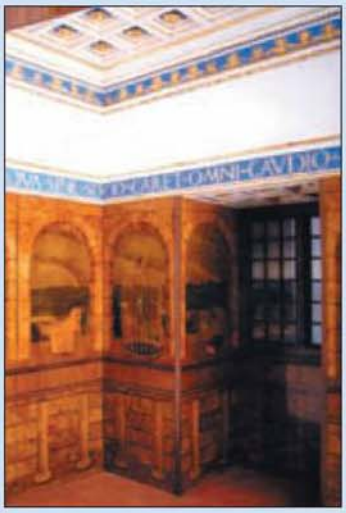

Not strictly ME

Our photograph on this page was sent in by Barry Hipwell, who describes himself as a 'miniaturist'. The reason Barry wrote to us was because he is looking for two or possibly three, depending on the cost, Peatol lathes for use by his students in Denmark. Barry enclosed the photo which is of a stunning model 12½in high.

Barry made the marquetry wall panels, and Danish student, Ursula Dyrbye-Skorsted, made the ceilings and cornices. The model is now in a private collection in Gloucestershire.

Maybe not everybody's idea of model engineering, but architectural models have certainly had a place in this magazine, especially in its earlier days. Would be good to see a few more, now and again.

Meanwhile, if you can help Barry in his search for Peatol lathes, call him on 01509 215619

Faking it 1

A letter in Post Bag in the last issue revealed that fake Myford spares were being sold on the internet on eBay. Traders have been cashing in on the Myford name for some time. Almost anything comes up with a search for Myford, just because the trader adds the phrase 'for Myford' or 'suits Myford', or even 'for Myford workshop'.

All of which is a pain if you are looking for something that originated in Beeston, and have to wade through hundreds of items with only the most tenuous connection to the most famous lathes in model engineering.

The practice of the business reported in the last issue is far worse, describing apparently shoddy goods as 'Myford'. Myford has been a by-word for quality and service to model engineers for generations. It is one of the cornerstones of the hobby, along with this magazine, our Exhibition and the SMEE.

With the Myford label you should know where you are. However, it is now important to be sure that the 'bargain' on eBay is all its cracked up to be. So be sure to ask the seller the right questions before you bid.

Incidentally, many of the items on eBay can be found for lower cost at places like the Model Engineer Exhibition. And you can see and handle them before parting with hard-earned cash.

Faking it 2

Even more worrying is the appearance of faked boiler and insurance certificates. The Southern Federation of Model Engineering Societies has issued a warning about dodgy certificates. Apparently owners of locomotives and traction engines have been turning up with doctored certificates as evidence of fitness to run.

York City and District Model Engineers reports that it also has experience of individuals turning up at the Dringhouses tracks and producing certificates which were of unknown validity, and impossible for the track marshal to decide if they were alright, as they were not in acceptable form.

York has decided now to limit running to boiler and insurance certificates issued by recognised national bodies such as the Southern Federation, Northern Association of Model Engineers, and the 7 ¼in. Gauge Society.

Shock proof

Earlier this year the horology (clock and watch repair) students at Epping Forest College received a shock when the next academic programme was published, the course fees for Practical Horology Courses had more than trebled. Inevitably, the course folded to the dismay of students.

With very little time to liaise, a group of the students decided to try to keep the course alive and looked at all the options available. One student found a workshop that, with some work, would make a suitable venue not to far from the original Loughton campus. A meeting followed, a committee was formed, and The Epping Forest Horology Club was established.

It was discovered that the equipment used by Epping Forest College was in fact owned by the British Horological Institute which was happy for that equipment to continue to be used for horological learning.

Work parties were formed and the equipment moved from the College to the new premises ready to start in November.

The former lecturer at the college agreed to continue with the classes at the new venue on various afternoons and evenings. Short courses in various different horological areas will be available during the year.

The group would be delighted to meet potential new members, so if you are interested in clocks then please telephone The Epping Forest Horology Club on: 0208 599 8579.

Or for more information visit www.efhc.org.uk

Post note

Any post addressed to Highbury Leisure Publishing will now automatically be re-directed to Future Publishing as they now own this company name following the sale of most of the company. Anything addressed using the old post code BR6 0PS will also be re-directed.

Future Publishing will send any post back to us in Orpington but obviously there will be a delay in us receiving it.

So, please, make sure all mail is correctly addressed. Believe it or not we still receive mail addressed to places we left years ago, to people who left the company years ago. Here is our correct address:

Model Engineer
Highbury House Communications plc
Berwick House
8-10 Knoll Rise
Orpington
Kent BR6 0EL

If you use any other address will take ages to get here, if it ever does.

CHUCK, the MUDDLE ENGINEER **by B. TERRY ASPIN**

POST BAG

Digital callipers

SIRS, - What is the basic principle used in the length measurement within a digital calliper? A very simple question I have asked myself, and friends, several times. Despite careers spent in high-tech industries none of us are sure of the answer. We can clearly postulate many possibilities but what method is actually used? I am sure that some *Model Engineer* readers will know and save my having to perform a destructive dismantling of a calliper.

Iain Miller, Fife.

Control of information

SIRS, - Further to my earlier e-mail, and the follow-up in *M.E.*, rather than debate each item raised by later correspondence, let us leave it to individual intelligent engineers to decide to what extent the insipid control freak mentality is pervading, not just our own pursuits, but also society in general.

Not only are we are being told what we can and can't access and do, but there is legislation in the pipeline, which threatens the availability of all forms of materials to both the public and in fact industry.

To find that the advocates of this interference are within our ranks, is somewhat worrying. My original comments stand.

Barry Hares, by e-mail.

From the book

SIRS, - In view of the contributions in recent *Model Engineers* (4238, 4241, 4245 and 4251) readers may be interested in E. S. Cox's comments in his book *British Railways Standard Steam Locomotives* published by Ian Allan in 1966. E. S. Cox was appointed Executive Officer (Design) for British Railways in 1948, and was responsible for co-ordinating the previous railway Drawing Offices in producing the BR Standard range of designs for locomotives and rolling stock

He writes; *"It was at first proposed to use bar frames for all of the larger engines with wide fireboxes..."* Work was thus started on the basis of alternative forged steel or cast steel frames, the specialist manufacturers being consulted in each case. While satisfactory designs could be evolved, it was soon found that a production bottleneck would occur because available machine capacity and handling space in railway workshops was insufficient. Even if supplied new by industry, as was perfectly possible, the frames would still require handling in railway shops for maintenance purposes, and when it became clear that both cost and weight would be increased, the idea was abandoned.

He goes on to refer to the narrowing of the frame plates to the axlebox centre lines to avoid offset loading through the spring hangers as per the Bulleid pacifics, and the consequent need to stiffen the cross bracing to offset the increased racking action of the piston thrusts. This narrowing was only possible with the wide firebox locomotives as on the rest the frames needed to be as wide as possible to accommodate their fireboxes.

It is of interest that not only were forged steel bar frames considered but also cast steel engine beds, but I also wonder whether part of the final decision not to use was political as the import of such frames, almost certainly from the USA, would have needed the use of hard won dollar reserves which HM Government may not have found favourable in the 1950s. Certainly this factor prevented Bulleid importing Berkeley Mechanical Stokers a few years earlier following the success with that fitted to Merchant Navy locomotive No. 35005.

My old friend Dennis Monk's comments re the Britannia slide bar problems suggest the motion brackets were not stiff enough. The same style of suspended slide bars were used on the Southern 'Lord Nelson' 4-6-0s, 'Schools' 4-4-0s, and all Bulleid 4-6-2s. I do not recall these causing any particular problems, and this was not a feature that was changed during the rebuilding of the Merchant Navy and West Country locomotives in BR days under Ron Jarvis's direction.

Mike Johns, Devon.

Help needed

SIRS, - Can any reader of *M.E.* with knowledge of printing help me with the dating of engraved drawings? Many modellers use engravings as the source material in their research for a model. As I understand the history of the printing of illustrations, in the early days an artist/engraver would draw the object, in our case perhaps a steam engine, directly onto the copper plate. This would be followed by the engraving of the plate to produce grooves of varying depth and width into which the ink would be spread and the surplus scraped off the smooth surface. The paper is then pressed onto the plate, under high pressure, and the ink would be transferred to the paper in mirror image, (intaglio?) This process would depend on the artist's view of the subject and his knowledge of mechanical devices, which in the mid 1900s would be limited as the object he was called upon to illustrate would be at the cutting edge of technology, to use a modern phrase. I understand that the next development was to work from a photograph which would improve the detail and I wonder if this was followed by the photographic emulsion being applied directly to the copper plate? This would further improve the accuracy of the detail and proportion. The next step would be the discovery of chemically etching the copper to produce the plate and the highly skilled engraver would be out of a job. By this time, or at this time, the printing process changed to letter press, where the ink is spread onto the smooth plate which is pressed onto the paper to transfer the ink to the paper, (like a rubber stamp). The dates at which these events took place could help to identify the year of manufacture, or invention, of many 19th century mechanical devices. Would some student or historian of printing please correct my understanding of engraving and fill in the dates of their invention, as this would help many researchers into 19th century mechanical devices as well as steam engines.

Tony Webster,
Northamptonshire, by e-mail.

Gatling gun reply

SIRS, - I have to agree with D. L. Francis (*M.E.* 4254, 19 August 2005), *M.E.* is no place for a 'quasi-political diversion' into issues of our modern day. However, I do take issue with his misrepresentation of the points raised in my letter (*M.E.* 4247, 13 May 2005). My interests include machines and mechanisms and their action. Machines like the Gatling Gun and the 1851 Colt 'Navy' Pistol are in scope. I am not particularly drawn, as he states, to firearms. I thought I had made the point of wanting to stay within UK law very clear and yes, I do have worries about where this legislation is heading but *M.E.* is not the place to air this one. I also have more than a passing interest in Saxon sword manufacture but again events suggest caution.

My interests seem to be paralleled to some extent by the current interest in modelling artillery pieces albeit in wood and, on the face it, a safe choice of material. However, this material would reduce the time to convert to fire a cartridge using domestic tooling to minutes and also yield a weapon that is undetectable by conventional systems, a definite contravention. Readers may recall the origin of the term 'barrel' central to this argument. Our language is scattered with similar references, *"going off half cocked"* comes to mind here.

Why would anyone want access to the drawings for a Gatling Gun? Why, to see how it works. Do I need to make one? No not really, life is too short but I can at least dream. Would any other reader like access to a set of drawings? Well, maybe. For me as an Internet user these things are but a click away but for many here it has got to be the old fashioned way. Clearly my protagonist has failed to make this simple link to what makes a lot of other readers here tick: we have wide-ranging modelling interests and a need to know about stuff and maybe make some of it. This is why we buy *Model Engineer* and I suspect why Mr. Francis buys it.

I can't quite picture any model engineer reader hooking up the finished scale Gatling Gun to the traction engine and embarking on a life of crime. Where would he/she get the ammunition, make it? Oops another interest exposed. How did they mass-produce all those complex shaped cartridge cases in the past with such high reliability and in relative safety? In a similar vein, has anyone thought about how they make Shredded Wheat or Shreddies? Maybe a reader can help me here, maybe scope for a series of articles.

So, where should *Model Engineer* be going? Well I think the current editorial team already have a very good grasp on this one and are doing their utmost to continue to build a wider readership with an interesting and varied range of topics. Like Mr. Francis, not all topics are to my tastes but I am open to almost anything that has some mechanical, historical or similar interest.

Steve Walkley, via e-mail.

Juneero update

SIRS, - I read Peter Spenlove-Spenlove's letter referring to Juneero (*M.E.* 4255, 2 September 2005) with great interest and would

Views and opinions expressed in letters published in *Post Bag* should not be assumed to be in accordance with those of the Editors, other contributors, or Highbury House Communications Plc.
Correspondence for *Post Bag should* be sent to: -
The Editor, *Model Engineer*,
Berwick House, 8-10 Knoll Rise, Orpington, Kent, BR6 0EL; fax: 01689-886666
or to **david.carpenter@highburygroup.com**
Publication is at the discretion of the Editor.
The content of letters may be edited to suit the magazine style and space available.
Correspondents should note that production schedules normally involve a minimum lead time of six weeks for material submitted for publication.
In the interests of security, correspondents' details are not published unless specific instructions to do so are given.
Responses to published letters are forwarded as appropriate.

like to make the following points.

The Juneero was a multi purpose tool which would cut, bend and punch holes in Juneero strip, cut and bend Juneero rod and was supplied complete with a 6BA die to thread the rod. The tool also clamped both strip and rod whilst being worked on. The strip and rod were sold in packs of 12, about one foot long, were heavily greased and wrapped in paper. The sheets that Peter refers to are not Juneero. The Juneero enabled one to make Meccano-like models but to limit the number of holes to the actual requirement of the model under construction, thus losing the colander appearance of most Meccano models.

I believe that its downfall was that the raw materials were greasy and you could not work with Juneero without getting dirty. I remember the many hours of pleasure I derived from the tool and also my mother's displeasure at my appearance after such sessions.

I had for many years hankered for a replacement for my old toy and about three years ago, whilst browsing at one of the trade stands at the annual Guildford show, I found a boxed Juneero which I purchased for £15. I enclose a photograph.

David Nunes, via e-mail.

More on Myfords

SIRS, - In reply to Mr. R. G. Burton of Lusaka (*M.E.* 4254, 19 August 2005) his Myford looks to be the same as one I have just bought. This is a Model 'M', 3½in. by 16 or 28in. between No.1 MT centres. The lathe has 12 speeds, 874 - 26rpm.

His looks to have the cast iron stand with the holes for the treadle drive and a suds tray as mine (No. 1459 of 1944).

He should have 14 change wheels and the machine will cut English and Metric threads according to the booklet I have. I will photocopy this if required; otherwise I suggest Mr. Burton searches for a copy of the Garner Book of the Myford Lathe which has all the information

I am surprised that Myfords themselves cannot identify the machine.

J. Bailey, London.

Which Myford

SIRS, - I refer to the letter and photograph from Mr. R. G. Burton of Lusaka, Zambia as shown in *M.E* 4254, 19 August 2005.

The picture is of a 3½in. Myford M lathe which was produced by the company from c1943 until 1947/48. This lathe is identical in almost every respect to the pre-war Drummond M type lathe as produced in considerable quantities by Drummond Bros. of Guildford from c1923 until 1943. The design changes in the Myford M relate to the top slide and method of tool fixing together with the addition of the rather bulbous change wheel guard which for me does nothing to enhance the appearance of the lathe.

During the war, the Drummond Company were heavily engaged in the manufacture of special automatic lathes under contract from the Ministry of Supply. Under a Government order, Drummond were ordered to dispose of their small lathe division which at that time manufactured both the Drummond M and the Drummond A, the famous low cost round bed lathe, which had been in production since 1908. The business was transfered to the Myford Company who at that time made their ML2 and ML4 lathes. The number of Drummond M lathes built by Myford is not known and it is believed that Myford, while having all the patterns and drawings to manufacture the round bed lathes, are not known to have manufactured any under the Myford insignia. However, it is believed that the drawings were used as the basis of the ML8 wood turning lathe which did indeed have a round bed of similar proportions and design.

The Myford M was manufactured until c1947 and was dropped from the product range on the introduction of the ML7 which is still in production. This is not the place to debate the design advantages of the old Drummond M compared with the more modern ML7, sufficient to say that this writer has had considerable experience using both machines and has a definite preference for the older machine. In fairness, however, the ML7 was probably developed using many of the features found on the old Drummond machines, and in the fullness of time the ML7 has come to be regarded as the benchmark 3½in. lathe for the model engineer, throughout the world.

As a matter of interest, following the unfortunate demise of the short-lived Drummond Association during the early 1990s, much archive material was lodged safely with SMEE following the death of Richard Bird, who was not only a superb draughtsman but was also a Drummond enthusiast who collected a wealth of information. The writer is privileged to be the keeper of this archive on behalf of the SMEE and is always willing to answer any queries and make available copies of drawings of parts and old catalogues via the editor.

John Anning, Devon, via e-mail.

David Nunes' Juneero replacement found at the annual Guildford show.

When is a Myford not a Myford?

SIRS, - The picture supplied by R. G. Burton (*M.E.* 4254, 19 August 2005) is of a Drummond 'M' series, not a Myford. Although Myford purchased Drummond some years ago, they seem to not want to know about it when asked any questions about Drummond products. If any one knows of any spares for the 'M', I desperately need a new lead screw nut, and am willing to purchase same.

Derek Jones, via e-mail.

Myford lathes

SIRS, - With reference to the enquiry about the Myford Lathe, number J3824 (*M.E.* 4254, 19 August 2005).

I purchased mine, a Drummond/Myford number J5133 from the makers just after the war in 1948. It was during the take over period of the Drummond Company. No parts are available; I would dearly love a new lead screw for mine. It has given wonderful service.

Derek Dean, Scotland.

Regulated pumps

SIRS, - If we are to be all technically accurate, then I cannot let D. A. G. Brown's comments on 'LBSC nonsense' of having a regulated pump bypass valve go unchallenged.

My calculation suggests that a locomotive running at 90psi steam chest pressure (100psi boiler pressure) and 25% cut-off might have a mean effective pressure of 33psig. Using the dimensions of my locomotive, two double acting cylinders 1.5in. bore by 2.312in. stroke gives a work output of 541in. lb per rev. The water pump is 0.5in. bore by 0.4in. stroke, and allowing that to be working at 105psi gives a work requirement of 8.4in. lbs per rev. Thus even if I had the bypass open to the extent that it just didn't feed to the boiler, I would only be wasting 1.5% of the cylinder output.

A more realistic estimate might be that I waste half of the pump outlet, i.e. 0.75%. I'm prepared to put up with this for the convenience of being able to set the bypass and then almost (not quite!) forget it.

One member of our club has a locomotive whose pump is just too small, so he keeps the bypass shut all the time, and tops up the boiler with the injector. This seems to have a lot of merit.

Duncan Webster, via e-mail.

Richard Bennett (right) gives Chief Judge Dennis Monk a thorough briefing before allowing the assessment lap to begin.

Brian Apthorpe poses for the camera with his very tidy 5in. gauge Maid of Kent before his 'shake down' lap.

LBSC MEMORIAL BOWL COMPETITION 2005

Neil Read
reports on a particularly enjoyable and successful event.

This year the competition for the LBSC Memorial Bowl was organised by Bedford MES and was held at their well appointed, Winterfields Railway situated at Haynes approximately six miles south of Bedford. The actual competition was held on Sunday 25 September as part of the host club's LBSC Rally Weekend. The Saturday part of the event was held in glorious sunshine and we understand that a good time was had by all. However, as your scribe, Mrs. scribe and the chief judge made their way down to the track on Sunday the skies were dark and cloudy and rain was falling. Things did not look very promising but by the time we reached Haynes and had met up with event organisers Ted Jolliffe and David Combes, had had a cup of coffee and sorted out the entries the skies had cleared and stayed that way for the rest of the day.

For those who do not know, the competition for the Curly Memorial Bowl is a relaxed event for locomotives designed or inspired by the great man. The rules have changed with the times and the locomotive does not now have to have been built by the competitor. This has resulted in some older locomotives reappearing to delight followers of LBSC's designs. The aim of the event is not to pick out the biggest or most shiny locomotive but to select those that Curly himself would have approved of and enjoyed driving. This tricky task is carried out by our chief judge Dennis Monk and our other regular judge Steve Eaton. Each year a judge is also co-opted from the host society and, on this occasion, this role was very ably filled by local man Les Shaw.

The judges examine each locomotive and chat to the owners about their design and construction. The engines are then put in steam and, after a 'shake down' run by the owner, they are handed over to the judges for them to drive and assess. The process takes 45min. or so per engine so there is a limit on the number of entries that can be accommodated in one day. Seven entries were received this year with one reserve, which is about right.

So, who was competing? The first contestant was Richard Bennett with his $3^1/2$in gauge 0-4-4-0 Mallett hybrid (**photo 1**). This locomotive is constructed using features from a number of LBSC designs and, as a consequence, has been christened No.57 no doubt inspired by the number of varieties offered by a certain, well-known food manufacturer. The high-pressure cylinders are standard Juliet with Stephenson valve gear. The low-pressure cylinders are *Evening Star* with slip eccentric valve gear. A Hielan Lassie boiler is used and the high and low-pressure cylinders are linked using steam proof, flexible tubing. One injector is fitted as well as an axle driven water pump. The tender utilises a Virginia chassis.

It was found that steam was raised in approximately 12 minutes. On the track some slippage was noted initially but then the locomotive settled down and the judges were each able to make their assessment runs. A most interesting locomotive and one which its owner has clearly enjoyed building and enjoys running even more.

Contestant number two was Brian Apthorpe with his 5in. gauge Maid of Kent (**photo 2**). This Midland compound look-alike was bought by Brian as an unfinished box of bits and took seven years to complete. It uses K. N. Harris valve gear, has two injectors but no axle pump, LBSC mechanical lubricator, ball valve water taps, O-ring clacks and a working water gauge in the tender. Cast iron cylinders and pistons are fitted. The overall impression was of a clean and very efficient locomotive that steamed easily and performed faultlessly. The judges seemed to enjoy this entry so much so that our Chief Judge

Left to right: Les Shaw, Henry Wood, Steve Eaton and Dennis Monk photographed examining Henry's Black Five.

Michael Law enjoys a 'shake down' lap with his very smart Juliet. Despite a derailment Michael went on to win the competition.

Zane Horton with his smart Pansy. The views from the Bedford MES track are spectacular.

Barry Harrison takes the diminutive Austere Ada for a leisurely run.

Les Aylott and his 3½in. gauge Maisie make regular appearances at the Bedford MES track.

felt compelled to complete a second circuit of the track in the course of his assessment!

Entry number three was Henry Wood who had entered the Warrington & District MES club locomotive - a 3½in. gauge Black Five Doris (**photo 3**). This was taken over as a project when a member of this society died and finished in two years. It features a Jim Ewins adjustable lubricator, top boiler feed with clack, back feed to tender via a clack. Slide valves are fitted to the cylinders. A screw regulator is fitted as is an axle pump, one injector and a hand pump. Even the pressure gauge on this locomotive was built by Henry. A four-element superheater is fitted. The locomotive is beautifully finished and fully 'kitted out' with lamps and an oil can, etc.

Steam was raised to the point where the blower was removed in approximately 8min. and the locomotive ran as good as it looks. By this time our judges were starting to look a little worried. It was clear the competition was going to be a close run thing with entries this good.

We now come to contestant number four, who was Michael Law with his 3½in. Juliet (**photo 4**). This was started when Michael was twelve years of age but was then shelved until the 1990s. When work restarted it was completed over a four-year period. An axle pump and a hand pump are fitted plus an injector. A Weir pump is underway but has not yet been finished and fitted. Baker valve gear is used and mechanical lubrication. Working hand brakes are fitted. The locomotive is obviously well made and nicely finished. Steam was raised in approximately 10min. and the shake down run was completed without problems. However, when the first judge was making his assessment run the locomotive derailed. Fortunately, he was able to stop the locomotive leaving the track but sufficient damage was done to prevent further tests. However, sufficient information had been obtained for the judges to mark the locomotive and so it was possible to include this entry in the results.

Contestant number five was Zane Horton with his 5in. gauge Pansy (**photo 5**). The owner built this fine looking locomotive over a period of 29 years. Features include a hand pump, axle pump one injector and cast iron cylinders that were machined from the solid bar. All the cab fittings were nicely done although the judges commented that they found the regulator a little sharp in use. Steam was raised in approximately 14 minutes. Progress seemed a little jerky during the shake down run by the owner but he pointed out that this might have been due to him being used to running the engine on a ground level track. However, once warmed up things smoothed out and the judges were able to complete their assessment without further problems.

The only 2½in. gauge locomotive entered in this year's competition was a W.D. Austerity (Austere Ada) by Barry Harrison (**photo 6**). This venerable locomotive was started by Barry's father in law in 1944, the boiler being built in a full size boiler shop. A single superheater is fitted, as are a hand pump, an axle pump and injector. A mechanical lubricator is also fitted. Steam was raised in approximately 7min. in this little boiler and the locomotive took to the track. Some problems were experienced with the locomotive derailing on the track but this was 'tweaked' by the organisers and the runs proceeded to plan. A vintage performance from a vintage locomotive.

Local man Les Aylott was contestant number seven with his 3½in. gauge Maisie. This was built 14 years ago over an 18-month period. Steam brakes are fitted and an axle pump and hand pump but no whistle. The boiler is straight LBSC with stainless steel superheaters. Mr. Aylott is well known at the Bedford MES track and has the distinction of having his silhouette on the station-building weather vane (**photo 8**). The locomotive was quickly brought into steam and completed the laps with the judges with no problems whatsoever.

It was now time for the judges to convene and allocate the awards. As stated before this was no easy task and some minutes passed with the judges in solemn conclave. However the task was eventually completed and the results announced. Third prize went to Brian Apthorpe and his Maid of Kent; second prize was awarded to Henry Wood and his Black Five whilst the prestigious Memorial Bowl was awarded to Michael Law and his Juliet (**photo 9**).

Our thanks to Bedford MES chairman Alan Gildersleve and his band of indefatigable helpers led by Ted Jolliffe and David Combes for a superb event. A special word of thanks are also due to the ladies of the society who kept us well supplied with food and drinks throughout the day. Thanks are also due to the competitors for entering the contest and their good-natured banter throughout the day. As we left chief judge Dennis Monk commented: *"That was one of the best LBSC Bowl events ever"*. I will drink to that!

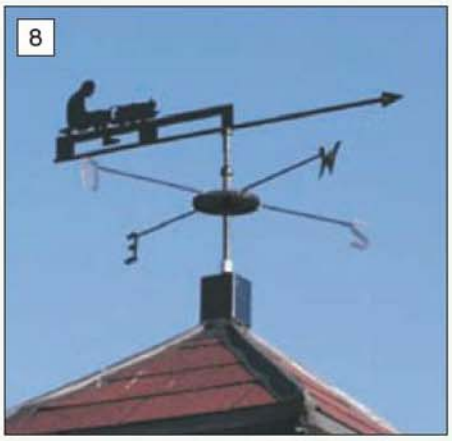

The weather vane on the station building shows a silhouette of Les Aylott driving his Maisie.

A jubilant Michael Law holds the Curly Bowl aloft in triumph.

Clock in early stages of reassembly ready for the top frame to be fitted.

Ready for setting the mainspring. It should be clamped down for this operation.

Here the movement is rigidly screwed to a board held in the vice.

BUILDING THE FRENCH GREAT WHEEL CLOCK FROM CLASSIC CLOCK KITS

Ian Beilby

concludes this series with details of the final assembly.

●*Part IV continued from page 498 (M.E. 4259, 28 October 2005)*

Once the great wheel has been polished the fusee click and click spring should be replaced in the wheel recess. The steel click should be brought to a high polish, and when fitted in the wheel, the pivot and the acting face of the click should be lightly oiled. The tip of the click spring where it bears on the click should also be lightly lubricated.

The fusee can then be reassembled with the great wheel. Again, light clock oil should be applied where the wheel runs on the fusee arbor and in the groove for the slip washer. It will be found necessary to insert the blade of a very small screwdriver or scriber in order to hold back the fusee click when reassembling the fusee and great wheel.

The final item to attend to is the clock's base plate. I am sure most constructors will wish to mount the clock on an appropriate base and enclose the clock in some sort of glass or Perspex case. The clock really should be housed in a glass case of some sort, if for no other reason than to keep out household dust and dirt.

In order to fasten the brass movement plate to a wooden base, four countersunk screw holes will require drilling in the movement plate prior to polishing. Do make sure that you drill the countersinks in the top of the plate!

The edges of the plate should first be draw-filed and then be polished along with the rest of the plate. Once this has been done the movement is ready for reassembly.

A suitable base was made and the plinth covered in a velvet pad. As my clock was to be housed in a Perspex case, all the necessary measurements were taken from the movement before constructing the base and ordering the case.

All the component parts of the clock are highly polished and cotton gloves should be worn when reassembling the movement in order to avoid touching the brass with your hands; the natural grease from your hands will stain and tarnish the brass.

Escape wheel restrained, and the fusee line fed on to the fusee.

First the three frame pillars should be tightly screwed in place in the rear frame. Normally when assembling a clock the dial is the last item to be fitted in place, but here the dial and dial bezel are attached from the rear of the front frame, and so the dial and bezel should be fitted to the front frame next. Check that the chapter ring and numerals are correctly aligned before tightening the screws.

The mainspring barrel supports along with the mainspring barrel should next be fitted to the movement base plate. Before fixing the barrel between the supports, the barrel arbor should be lightly oiled where it runs in the front and back caps of the barrel. In practice the arbor does not actually revolve, but the barrel does.

When the mainspring barrel is fitted in place between the supports the arbor pivots can be lightly oiled. The mainspring ratchet should be placed on the square and the click and screw should be fitted in place. The click screw should not be tightened at this stage.

The screws securing the supports to the movement plate should be firmly tightened. The rear frame should be laid on its back and the great wheel, centre wheel and escape wheel fitted in place, **photo 49**.

The top frame can now be fitted in place and secured with the pillar screws. Before fitting the front frame in place ensure that the fusee line is located inside the frame pillars. Now the frames are assembled it should be possible to check the end-shake of the wheel arbors. The wheels should spin quite freely coasting to a gradual halt. There should be no sudden stoppage of the wheels. The frames can then be firmly secured to the base plate with the four steel screws.

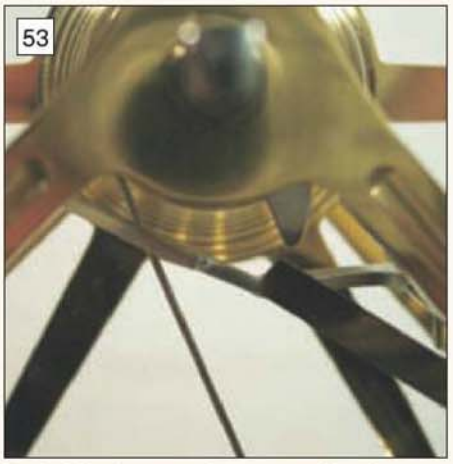

Beak of the fusee stop just approaching the notch in the stop lever.

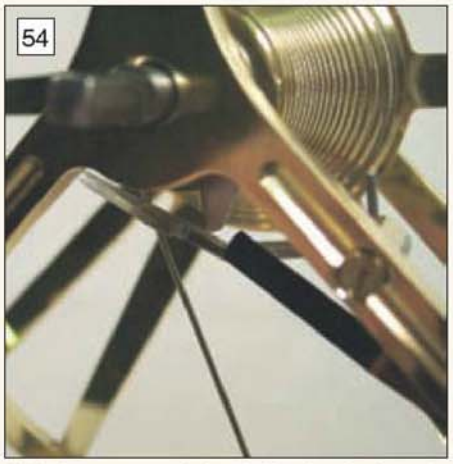

With the next turn of the winding key the fusee is arrested.

After winding all the line is on the mainspring case and the ratchet click secured.

The clock is seen to best advantage on a properly made base board.

To keep the clock clean a proper glass or Perspex case is required.

Photo 50 shows the movement at this stage of assembly. Before setting-up the mainspring, the movement must be securely fastened to a dummy baseboard.

You can see in **photo 51** that I have clamped a board in the vice, and secured the movement to the board via the four screw holes previously drilled in the movement plate.

Before winding the fusee line and setting-up the mainspring, the fusee stop-lever and return spring should be fitted to the inside of the front frame. Traditionally, when setting-up a fusee movement, the fusee line is simply wound onto the mainspring barrel and then the barrel ratchet is set-up for a further half turn.

A far better method in my opinion is one recommended by John Wilding. John recommends this particular method in many of his books on clock repairing.

His advice, and the method that I always adopt, is to first wind the line onto the fusee, just as you would when winding the clock. The escape wheel must be prevented from turning, and so a pipe cleaner should be inserted between the crossings of the escape wheel and the movement frames. The fusee is then wound-up and the wire carefully fed into the grooves of the fusee. In **photo 52** you can see the escape wheel secured and the fusee line fed onto the fusee. Permanent tension must be kept on the line whilst winding the fusee in order to prevent the line from tangling.

When the fusee is full, the mainspring barrel is rotated and the surplus line is taken up on the periphery of the barrel. At this point the barrel ratchet and click are engaged thereby keeping tension on the line. The screw for the click should not be over-tightened at this stage.

The fusee stopwork can now be easily checked. The fusee line should bring the fusee stop lever to the front of the fusee, and the notch in the lever should arrest the beak on the fusee stop piece. The stop lever should arrest the fusee on the last winding turn of the fusee, when the fusee is full of line. In **photos 53** and **54** you can see the beak of the fusee stop just approaching the notch in the stop lever. With the next turn of the key the fusee is arrested.

The line is adjusted on the perimeter of the barrel so that the stop lever misses the beak of the fusee stop on all but the last winding turn of the fusee. By winding the line in this way, the mainspring is in its unwound state, and there is very little tension on the line, hence any lateral adjustment of the line on the barrel is easy to achieve. I found on my clock that the stop lever required bending upwards slightly, and that the inner face of the lever required a small amount of filing in order to engage with the beak of the fusee stop. These are all final adjustments that have to be made with the actual components in situ.

Once you are happy with the action of the fusee stopwork, the wheel pivots should be oiled in preparation for winding the line onto the mainspring barrel.

Good quality clock oil should be used, and used sparingly, you do not want oil running down the front of the frames! I would also mention that only the pivot holes in the frames are oiled, no oil whatsoever is placed on the pinions or wheel teeth.

A spanner or letting-down key should be fitted to the square on the mainspring arbor and the mainspring wound-up a quarter of a turn.

The pipe cleaner is then removed from the escape wheel, and you should find that the wheel train starts to run. Continue winding the mainspring in stages, until all the line from the fusee is transferred onto the mainspring barrel. At this point the mainspring arbor is given another half turn in order to set-up the mainspring.

With the ratchet click positively engaged with the mainspring ratchet, the click screw is now firmly tightened. In **photo 55** you can see all the line has been transferred onto the mainspring barrel and the ratchet click secured in place.

The mainspring is now set-up or preloaded. The mainspring must be set-up in this way in order for the most efficient part of the spring to be utilised when delivering power to the wheel train. The pallets and back cock should now be fitted to the movement, and the movement can then be wound-up.

Just to digress slightly, the fact that there are two arbors with winding squares visible on a fusee skeleton clock sometimes causes confusion with owners. The larger square on the mainspring barrel arbor is only used when setting-up or letting-down the mainspring. The smaller square on the fusee arbor is used to wind the clock.

I appreciate this is common knowledge to the initiated, but it is surprising how often I am asked this question by the owners of these clocks.

The action of the stop work should be checked, and if working correctly the fusee stop lever should arrest the fusee when full of line. With all the line on the fusee, the clock is designed to run for fourteen days.

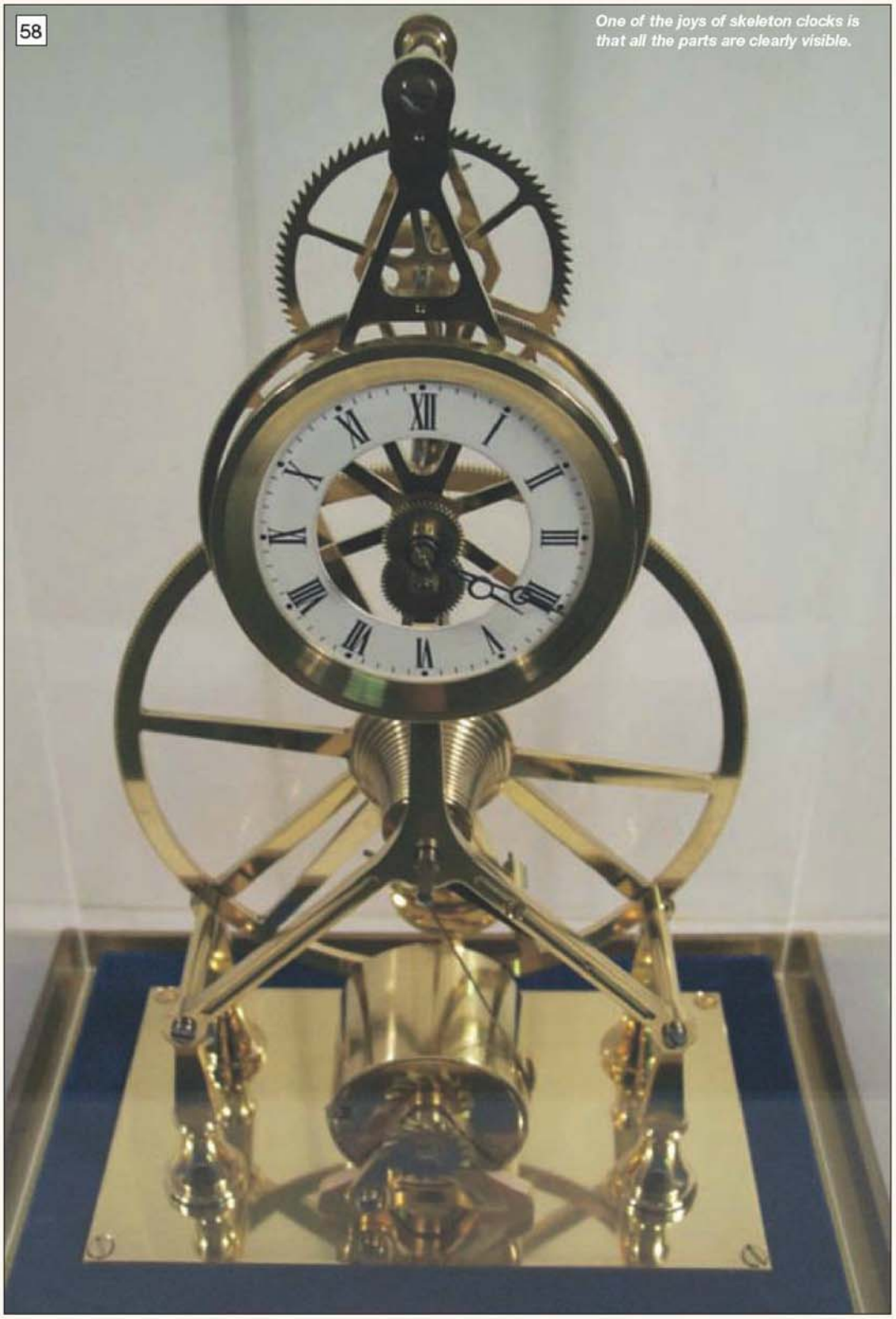

58

One of the joys of skeleton clocks is that all the parts are clearly visible.

The back cock is provided with an elongated hole in order to provide for fine depth adjustment to the pallets. When happy with the action of the escapement the pallets should be lightly oiled.

The motion work is fitted in place on the front frame, and the centre arbor should be lightly oiled before fitting the cannon pinion onto the arbor. The hands can then be fitted and secured with the cross pin. The pendulum crutch is a friction fit on its arbor, and beat adjustment is obtained by holding the pallets and adjusting the crutch to the left or right. Finally the pallet arbor pivots should be oiled.

The clock was unscrewed from the dummy board and screwed to its permanent baseboard as can be seen in **photo 56**.

A Perspex case had been made and a photo of the completed clock fully 'cased-up' can be seen in **photo 57**. A Perspex or glass case really should be provided in order to protect the clock and also provide all-round sight of the movement. I have not lacquered any of the parts of the clock but other constructors may wish to do so, I feel this is a matter of personal choice.

In conclusion I would like to say how much I have enjoyed assembling and finishing this charming clock, and hope other readers will agree that the effort has been well worth while.

I have endeavoured to show how this can all be done by virtually anyone with a little guidance and a few simple hand-tools. Although I have access to a lathe, the lathe was not used in any of the polishing operations when finishing the clock. The entire clock was hand finished throughout.

This was done in a deliberate attempt to show that no expensive or specialist equipment is required in order to assemble and finish one of these kits. I am confident that just about anyone who buys one of these kits should be able to assemble and finish the kit, and be justifiably proud of his/her achievement.

For a model engineer interested in the mechanics of a clock movement, this design of clock has a lot to offer. Owing to the clock's simple design, all aspects of the mechanism are clearly visible and understandable even to a lay man. As can be seen in **photo 58**, the mainspring barrel, fusee, gearing, motion-work, pendulum and escapement, all important features of clockwork, are visually displayed on this clock, and shown in the most practical of all formats. No amount of drawings or written words can better explain that which you see and understand with your own eyes.

For the more experienced clock maker/ engineer the kit would make a wonderful platform which could be modified or altered depending on his/her own particular skills and ambition. With a bit of thought (and work) a different more complicated escapement, grasshopper etc, could be fitted, or even a platform escapement or going barrel substituted.

Without doubt these kits from Classic Clocks Kits are the next best thing to making your own clock. The quality of materials and workmanship is excellent, and for those who either do not possess all the necessary equipment or time to make their own clock, these kits provide the perfect answer.

As a footnote, when I expressed an interest in assembling and writing about one of these kits, the owners of Classic Clock Kits very kindly offered to let me have a kit, (for a consideration) provided I returned the clock when finished.

Thankfully I declined their offer, and bought the kit for myself. Having seen the quality of these clocks and had the pleasure of assembling the kit, I would have been very sorry and most reluctant to have to return it. **Classic Clock Kits can be contacted at 75 Foxley Lane, Purley, CR8 3HP; tel: 02086 685 559; website: www.classicclockkits.com**

LETTERS TO A GRANDSON

M. J. H. Ellis
continues his discussion of length standards.
●*Number 82*

Dear Adrian, In my last letter I held forth about how an accurate end-bar can be made, equal in length to the distance between the scribed lines on a standard 'line' bar. A yard-long bar of either kind is not very useful in the workshop; and so it is necessary to derive from the 3ft. long end-bar others of shorter length.

The technique used is that of producing either two or three bars which (1) when compared with one another are of equal length; and (2) when placed end to end are equal in length to an accurate, longer, bar.

This process can be repeated to produce progressively shorter bars down to one only 1in. long; and it can then be possible to use these in combinations to give any integral number of inches from 1 to 36. I certainly do not pretend to have any expert knowledge on the subject, but I can see that it is necessary to proceed by a ratio of 1:2 or 1:3 because the factors of 36 are, providentially, 2 x 2 x 3 x 3. Also, that supposing that we have, for example, bars which are 2 and 3in. length, it will be easier to derive a bar 1in. long by difference (3 - 2 = 1) than to set about it by producing two 1in. bars from the 2in. one.

I would be interested to hear if you can devise a better system, but I have done a little experimentation, resulting in the sequence shown in my sketch (**fig 1**). This gives a series of bars of eight different lengths, combinations of which will give every integral number of inches from 1 to 36. The diagonal links denote division by means of two or three shorter bars (the harder way); whereas a horizontal line indicates that the sub-division is done the easier way, by difference.

You should understand that the emphasis in these procedures is on detecting which of two bars is the longer, rather than measuring the magnitude of the difference. The comparator, which is a specialised instrument used for the purpose, is analogous to a galvanometer, not to a micro-ammeter.

On the assumption that you know even less about comparators than I do, I will now impart the following information, recently acquired from a text-book. (Can you imagine your father making such an admission!) Most comparators are of the vertical type. They are something like a drilling-machine, having a flat base and a column from which the measuring head projects. A vertical plunger takes the place of the spindle, and can move up and down to sense the height of the work-piece. The mechanism may be an elaboration of that of the Dial Test Indicator, by means of which a tiny movement of the sensing probe produces a greatly magnified movement of the pointer. For what it may be worth, it is my opinion that this system may perhaps impose more load on the sensing mechanism than is desirable, and that in principle some sort of servo-system might be preferable.

In fact, there are alternatives to purely mechanical amplification. In one design, for example, a horizontal disc mounted on the upper end of the plunger forms one plate of an electrical condenser (I know they are called 'capacitors' nowadays, but what was good enough for Faraday and Lord Kelvin is still good enough for me) and, the other plate of the condenser being fixed, the change in capacity could be detected and amplified electrically. To the point, indeed, where it is possible to detect a difference of a millionth of an inch.

Here comes another *obiter dictum*. Somewhere or other, I read that Lord Kelvin was held in such veneration in Glasgow, that on occasion, when he feared that he might miss the London express, he sent word to the station, and the prestigious train was held for him! I must tell you more about him, for he was a remarkable combination of percipient scientist and ingenious inventor. I may not like unnecessary innovations like 'capacitor' but I applaud the honour implicit in 'degrees Kelvin', i.e., degrees Centigrade above the absolute zero of temperature, -273.1deg. C. By the way, before I leave the subject of the illustrious Ulsterman, it is worth mentioning that it was his sensitive mirror galvanometer which made trans-Atlantic telegraphy possible. A beam of light, reflected from a pivoted mirror was the equivalent of a weightless pointer of unrestricted length, and the same principle has been adapted in an optical form of comparator.

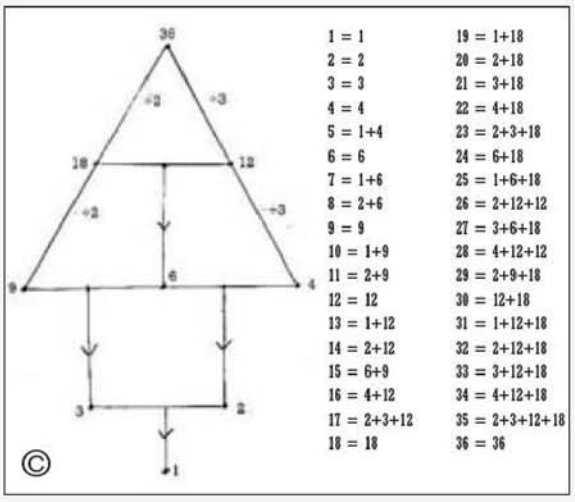

1 = 1	19 = 1+18
2 = 2	20 = 2+18
3 = 3	21 = 3+18
4 = 4	22 = 4+18
5 = 1+4	23 = 2+3+18
6 = 6	24 = 6+18
7 = 1+6	25 = 1+6+18
8 = 2+6	26 = 2+12+12
9 = 9	27 = 3+6+18
10 = 1+9	28 = 4+12+12
11 = 2+9	29 = 2+9+18
12 = 12	30 = 12+18
13 = 1+12	31 = 1+12+18
14 = 2+12	32 = 2+12+18
15 = 6+9	33 = 3+12+18
16 = 4+12	34 = 4+12+18
17 = 2+3+12	35 = 2+3+12+18
18 = 18	36 = 36

All this having been said, however, it seems to me that the simplest and most versatile means of comparing the lengths of two bars was that devised in the National Physical Laboratory ('N.P.L.'). I would never have thought that such simple equipment could be capable of such sensitivity, for all it uses is no more than a spirit-level.

Please refer to my sketch (**fig 2**), in which AC represents the glass vial, and B is the middle of the bubble. The length of the vial is 2d, and the amount of curvature (i.e., the maximum departure from a straight line) is x. O is the centre of the circle of which AC is an arc. Its radius is r.

Then by the theorem of Pythagoras,

$$r^2 = d^2 + y^2$$

But $y = r - x$, therefore:

$$d^2 + (r - x)^2 = r^2, \text{ i.e.,}$$
$$d^2 + r^2 - 2rx + x^2 = r^2, \text{ whence}$$
$$d^2 - 2rx + x^2 = 0,$$
$$2rx = d^2 + x^2, \text{ so}$$
$$r = (d^2 + x^2)/2x \qquad (1)$$

Suppose that the spirit-level is now tilted so as to cause the bubble to move to B_1. The point about which rotation takes place does not matter, but it is convenient to regard it as being about point O, and for it to have been caused by the displacement of point P on the base to P_1. Then triangles OBB_1 and OPP_1 are similar, and consequentially:

$$\frac{BB_1}{r} = \frac{PP_1}{l} \qquad (2)$$

Let us now substitute some representative values in these equations:

$x = 0.001$in.; $d = 1.5$in.; $l = 1.0$ in.

Then, from (1),

$$r = (1.5^2 + 0.001^2)/\,2(0.001)$$
$$= (2.25 + 0.000001)/0.002$$

But 0.000001 is so small compared with 2.25 that it can be neglected,

and so $r = 2.25/0.002 = 1125$in.

Suppose now that in equation (2) BB_1 is taken as 0.050in., i.e., a little less than 1/16in., and about the minimum distance that one could expect to observe with the naked eye, and that the spirit-level rests on two bars, the centre-lines of which are an inch apart. Then:

$$0.05/1125 = PP_1/\,1$$
$$\text{and } PP_1 = 0.000044\text{in.}$$

rather less than 1/20th. of a thou. However, the author to whom I am indebted for my information evidently thought that the vial could be less curved than the one I have quoted, since he mentioned a value for r of as much as 300ft., or 3600in., more than three times greater than my 1125in. In that case, PP_1 could be as little as:

$$0.000044 \times 1125/3600$$
$$= 0.000014\text{in.}$$

Hitherto, I have never thought of a spirit-level as being of any use in setting-up work accurately. I now see that I was mistaken. Take note! even Grandpa is not infallible. But not a word to your father!

Your affectionate Grandpa.

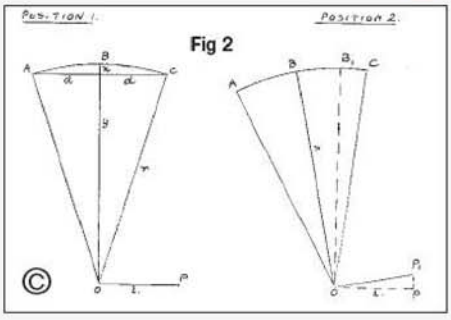

I/C TOPICS

Nemett
offers another mixed-bag with some responses to queries and an introduction to a new single cylinder 4-stroke engine project.
NUMBER 6

Continuing with the discussion of radial and rotary engine timing issues, I have received information from Bob Wahlgren from Seattle who says *"Internal combustion reciprocating engines are my passion"* and offers the following comment:

"All the American radial engines that I know of, that is the larger Pratt & Whitneys, use a compensated cam in the magneto to fire the spark plug at the proper piston position. I've never known of any compensation of the actual geometry of the crank chain. Besides it would not make sense to offset the articulated rod knuckle pin positions on a master rod since the paths are elliptical anyway.

So either way a cam event would be out of sync with the master rod cylinder if you either advance or retard the pin hole location. So the easiest and most logical solution is to compensate the firing point i.e. the distributor cam".

I am indebted to Bob for that information.

Technical Editor, Neil Read has also drawn my attention to the Manley Baltzer big end design used on the Le Rhone 80HP rotary engine. In this design the con-rod big ends take the form of circular arcs which are fitted into grooves cut into the two halves of the big end bearing. Readers will find photographs of this arrangement in *M.E.* 4185, 27 December 2002 in the article on the fine award-winning example of this engine by Alfred Nash.

Matadors - but not bull fighting!

Tony Wright from Middlesbrough writes:

"Sirs, I have obtained a set of drawings and a basic set of instructions for building a Matador 60 4-stroke engine.

I have looked carefully through the information given, but cannot find out how the crankshaft and connecting rod bearings are lubricated. I am familiar with 2-stroke engines which are lubricated and internally cooled by the fuel/oil mixture passing through the crankcase. This obviously, cannot apply to a 4-stroke which, basically, has a cross-flow induction system.

There is a nipple shown fitted to the crankcase. Is this a breather, or does one inject oil into the crankcase through it prior to each run?

Any further information on building this engine would be most gratefully received".

I have looked at my own copy of the Matador drawings (I don't have the building instructions) and confirm Tony's findings. The breather in question is at the bottom of the crankcase and therefore I assume it is a drain rather than a breather. It may be that the engine is intended to run with oil in the fuel and that the oil draining past the piston will lubricate the engine. In any case I would certainly introduce a small amount of oil into the crankcase prior to running the engine. As usual, any further information will be welcomed.

A Galloway engine in miniature

Alan Thatcher from Reading SME has completed his latest stationary engine which is the very nice Galloway horizontal engine (**photo 1**). This is a model of the 5hp Galloway Round Rod Engine, so named because of the round section connecting rod. The engine has been professionally lined out and features a low tension ignition system with the points inside the cylinder. The points act as the spark plug because the spark induced at the points when they break ignites the mixture (**photo 2**). The coil is just there to provide inductance in order to produce a good spark across the opening points. This method of ignition was used before the advent of modern high tension systems. The speed is governed by the common hit and miss system and as can be seen the engine runs well (**photo 3**).

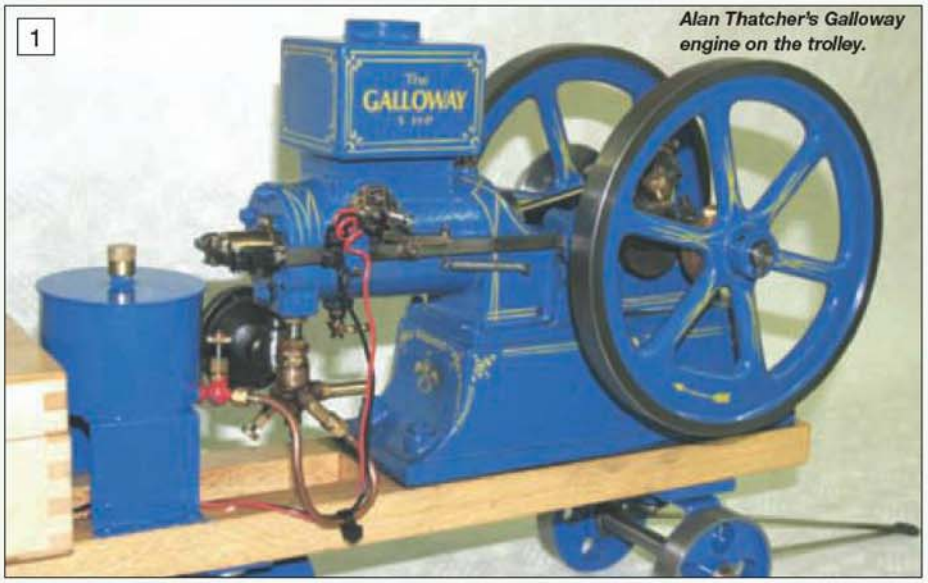

1 Alan Thatcher's Galloway engine on the trolley.

How hot does your engine run?

This is a question that many of those who run I/C engines ask from time to time. In the past those building experimental or high performance engines have used various methods to find out. We have recently received details of a product that could answer the question. This is the non contact infrared thermometer (**photo 4**) newly introduced by Greenwood Tools. This works by pointing the sensor at the object in question and pressing the button. After a second or two the surface temperature of the object is displayed on an LCD screen. A laser pointer is incorporated to aid accurate aiming of the sensor although the website (**www.greenwoodtools.co.uk**) says that the thermometer should be positioned as close to the object as possible. The temperature range is -33 to 250deg. C. The thermometer could be used to measure temperatures of I/C engines, battery packs, electric motors or other things that may require monitoring of temperature. Greenwood Tools can be contacted via their website or on 01527-877576.

2 Contact point operating mechanism on the Galloway engine.

3 Galloway engine on an early test run.

Greenwood non contact infrared thermometer.

A single cylinder 4-stroke engine

I have mentioned previously that I have been working on the drawings for a new single cylinder 4-stroke engine. Well, I have now finished the drawings and am about to start the construction of the prototype to prove them.

The engine is a single cylinder 15cc vertical 4-stroke with a single overhead camshaft driven by toothed belt from the crankshaft. It is aimed at those who have never built an I/C engine before and is an attempt to prove my *"if you can build a steam engine, you can build an I/C engine"* theory.

The engine has ball race main bearings and needle roller big end to simplify lubrication. I have used standard toothed belt components so that there is no need for constructors to venture into gear cutting and also it makes the drive to an overhead camshaft much simpler.

I have drawn the engine using metric dimensions and have used standard easily available metric bearings.

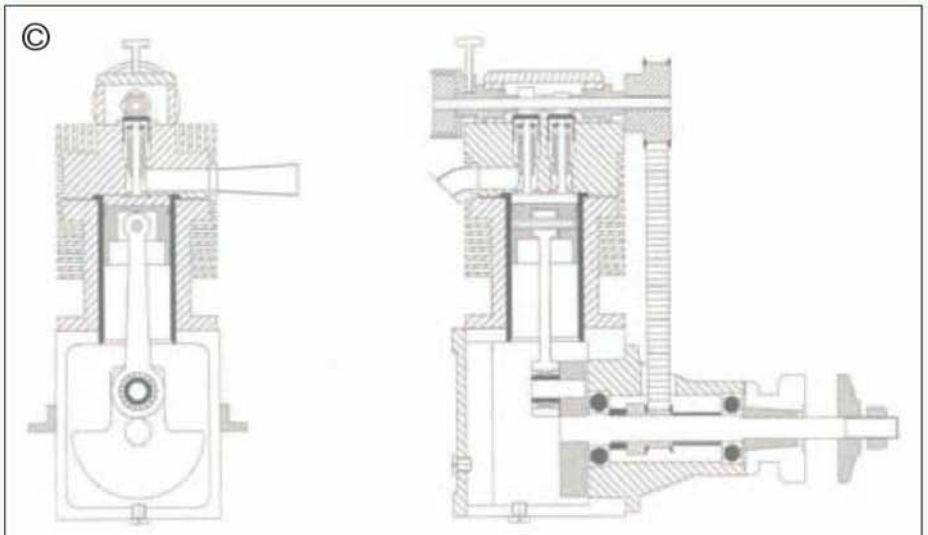

Figure 1
General arrangement of the new 15cc single cylinder 4-stroke engine

The drawings show both air and water cooled versions and I have set the compression ratio at 10:1 in order that either spark or glow plug ignition can be used. But this will be proved before I get deeply into the construction series. The spark version is intended for Hall Effect electronic ignition (again easily obtainable) which avoids the problems associated with small scale contact points.

The engine is also designed to be machined from the solid so there are no expensive castings and I will be making full size drawings (15 A3 sheets) and construction notes available for an extremely reasonable charge once they are proved out.

For those of you thinking *"But what about the cams?"* don't worry, I have included a jig of the type used by Edgar Westbury for cutting them on the lathe. They will be attached to the shaft using Loctite with the positions set using a rotary table and V-block. **Figure 1** shows the general arrangement of the air cooled version of the engine.

It is my intention to use this engine to answer most of the engine construction queries sent in by readers and if the engine is successful to follow up with a twin cylinder version and who knows what after that. Watch this space!

IN THE NEXT ISSUE

- New Series - The Pedestal Clock by Peter Heimann
- Out and About - Our Stroll Around the Traction Engine Rally Fields This Year
- Walter Smith's 4-Cylinder Compound Atlantics for the NER

and Model Engineer Exhibition 2005

Plus all the regular features

ON SALE 9th DECEMBER 2005

(Contents may be subject to change)

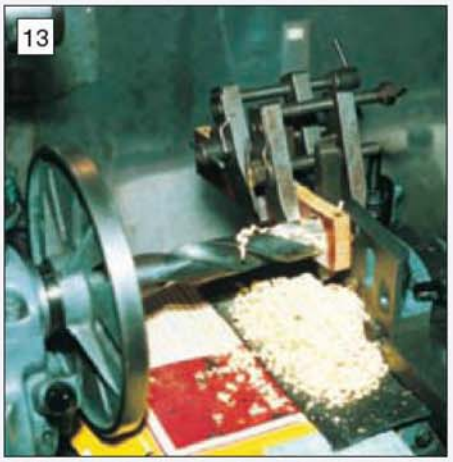

Drilling the Tufnol connecting rod on the lathe with the component clamped to an angle plate.

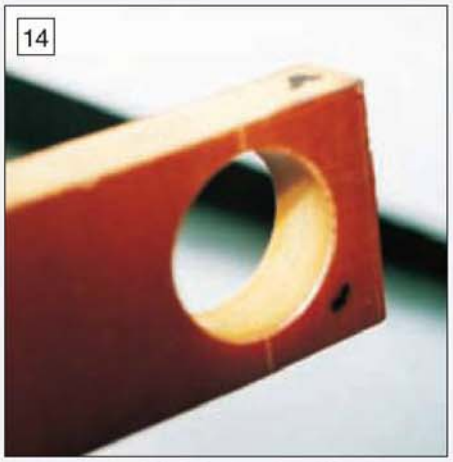

Aim for a smooth hole in the Tufnol like the one shown to provide good bearing surfaces.

Turning the T-bolts. Here the undercut is being machined.

POWER SLOTTING ATTACHMENT

D.L. Walters
describes the connecting rod and recommends the use of Tufnol for making this item.

●*Part III continued from page 504(M.E. 4259, 28 October 2005)*

In order to reduce vibration, low inertia fabric Tufnol was used for the connecting rod. The material consists of cambric cotton soaked in phenolic resins then pressurised and baked hard. The surfaces are mirror like and the material very hard. It is stable up to around 110deg. Celsius.

Like all resin bound materials it is best machined by carbide tipped tool but a cobalt, HSS tool will do. The cutting edge must be sharp and backed off well. A tremendous amount of heat is always generated when machining this material but it is best machined dry with just a light smear of neat oil applied to the tool tip when it is frequently backed out to clear the resin dust. This is produced in huge amounts, so a good dust resistant face mask is *a must*. A half-open door or window, if the day is dry, will help no end. Please do not let the above frighten you off this material. It is much better than an aluminium alloy rod.

Having acquired an off cut of the material in sheet form cut it to size by hacksaw or bandsaw. Mark out the two holes and centre punch. If you are not used to working this material then I suggest it is backed front and rear with thick hardboard as this will assist in getting a good finish without breakout to the hole edges.

In **photo 13** the hole is being drilled. The drill land was backed off a little. The resultant bore finish is shown in **photo 14** - dead smooth almost a polished surface. Remember to constantly back out during drilling at low speed and fine feed. Take your time. This operation is best done in the lathe with the work clamped to the large Myford

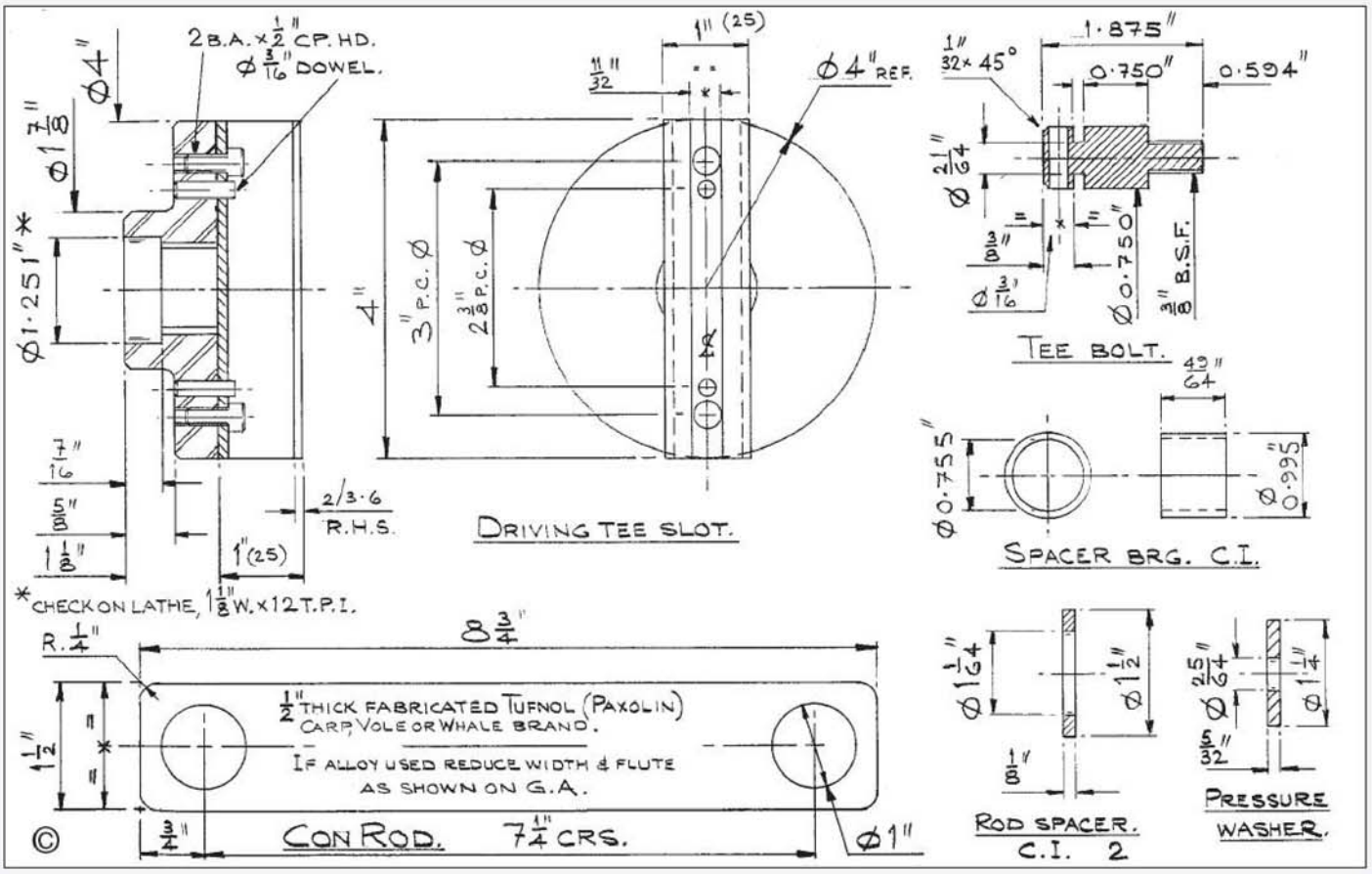

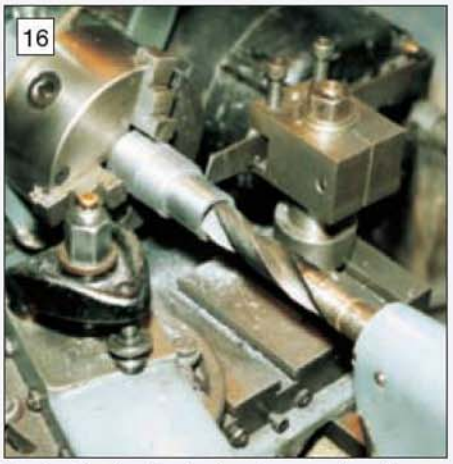

Turning the bearing bushes from good quality cast iron bar.

Drilling the back plate for the driving slot in the mill/ drill machine.

Spotting the fixing and dowel holes through the back plate into the driving slot.

angle bracket on the cross slide as in photo 13. Speeds and feeds are not so easily controlled in the mill/drill. Lastly, do cover the lathe shears to protect them from the resin dust. After cutting large holes by boring or drilling sometimes the edges of the material contract and may require a touch with a fine file to restore size.

T-slot bolt assemblies. The drive bolts have a hole in the head so a bar can stop them rotating whilst being tightened in situ. The other hand has to tighten the hexagon nut.

The head pulls up to the inside of the driven slot. The cast iron bush pulls down onto the opposite side. The thick pressure washer pushes onto the bush locking up the assembly and, in practice, has proved its worth. The con-rod runs on the outside of the cast iron bush partly lubricating itself. The side washers just locate the con-rod as on the G.A. drawing section.

The bolt is ordinary turning, grooving and threading, the groove under the head is being turned in **photo 15.**

Spacer bearing. This is first quality, continuous cast, cast iron bar, bored, fine turned on the outside dia. and parted off to length. Soak in thin machine oil over night.

Side washers. Made at same time and from the same material on the same bar, see **photo 16**. Also soak in thin oil.

Large washer. Make from 30mm dia. bright mild steel bar.

Hexagon nut. Standard commercial hexagon steel nut, 3/8in. BSF

With the production of this part we can begin to see a little light at the end of the tunnel.

Driving T-slot. This component consists of the driving back plate screwed to the lathe mandrel nose, with the T-slot screwed and doweled to it.

A finished back plate can be purchased or it can be made from a casting, that is your decision. I used the standard Myford chuck back plate that is 4in. (100mm) dia. and 1/2in. thick. Mark off the line at dead centre height, then the four holes, place on two parallels, auto-punch, drill the two outer holes 4mm dia. and the inner No.14 all right through as seen in **photo 17**. Put to one side.

The T-slot is made in exactly the same way as the ram head T-slot. In fact both were made at the same time as can be seen in photo 4. After cleaning up turn over and mark the reverse side centre line at both ends and of the tube wall so that the part can be lined up on the back plate and clamped as shown in **photo 18**. Using the back plate as a jig, now drill through the outer holes with a 4mm dia. drill, and the inner ones No.14, again photo 18 refers. Unclamp and open the outer holes in the T-slot to 3/16in. diameter. Tap the outer two holes in the back plate 2BA. Screw both up tight using 2BA x 1/2in. steel cap head screws. Set up again as photo 18. Ream the two inner holes 3/16in. dia. right through. Fit light drive fit dowels with their heads 1/16in. proud on the screws side as shown on the sectioned side view on the G.A. drawing.

All the main components now lay behind me on the assembly bench. Temptation now overcame me, the machine just had to be tested to see if all the work had been justified or if a serious clanger had been dropped. Could something be out of square, then it would not rotate. Perhaps there would be serious vibration!

Testing assembly

The driving plate is screwed upon the lathe mandrel nose, the distance from the front of the T-slot to the front of the pillars is 2 1/2in. (64mm), so the base plate assembly was set to this and clamped to the bed ways. Spacing washers were added then the ram assembly - so far so good. Now the acid test. Was the ram T-slot square to the bed ways? A large T-square proved it looked good.

The con-rod was a dead fit over both cast iron bushes on the T-bolt assemblies, this caused my heart to nearly stop, for here was real trouble surely. The driving T-bolt assembly was set to give a stroke of about 1in. (25mm) and the con-rod assembled to it with little trouble. Just a wangle to get it over the cast iron bush. The nut pulled it up good and tight just as the drawing.

I could see the other, now to be fitted, might be pitched just enough to prevent this, so took courage in both hands and found it fitted up no trouble at all. Can you imagine my relief? A quick retreat to tackle a drop of my best tomato wine, and I relaxed for half an hour in oodles of self praise.

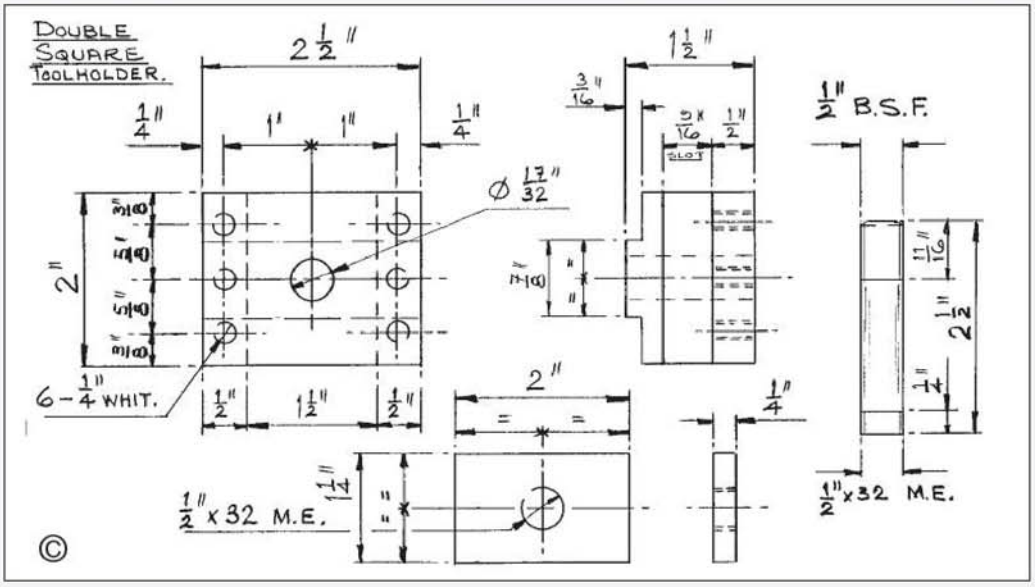

The motor was started, second back gear speed selected and the clutch engaged with fingers crossed. There was no squeal of belt, no sound of graunching or scraping just round and round went the driver, up and down the con-rod and ram. A chill thought ran down my spine. I had forgotten to set any clearance between the ram head and its back plate. Fortunately, chance had taken care of this.

I decided to set it correctly and photo 3 shows this. A spanner with a head of at least 1/4in (6mm) is placed on its side with the head between the two. The other spanner shown is tightening the T-slot bolt assembly. This gap can vary if so required but should not be less than stated.

Light oil just smeared over the cast iron bush was all that was required for lubrication as it could be seen that the fabric in the rod was wicking up oil.

Runs were made at all speeds with no heating up of the bearings. Slight vibration was only just discernable at top speed, so all was well. Now to tool up!

Standard tool holder. *"Keep it simple and keep it strong"* was the motto of my metal work teacher at Grammar School. This tool holder is intended to do the rump of the jobs done by the machine using three sizes of tip tool but be basically the same,

A piece of 1 1/2in. (38mm) square bright mild steel bar was cut 2in. (50mm) long. Mill and drill it to drawing ensuring that the tool holder hole will be parallel to the slot and 90deg. to it. Two 2BA x 1/2in. long hexagon head brass screws secure the holder.

The clamp plate is 2in. (50mm) x 1/4in. (6mm) black steel and is a reasonable fit in the ram T-slot. I stuck it to the underside of the block and drilled tapping size. Open out in the block to 9/32in. dia. tap plate 5/16in. BSF and fix studs with Loctite 601 to be flush on the underside. Use standard commercial steel hexagon nuts.

Tool bit holder. Why the collar? Everyone asks but the answer is simple. I did a job but the next setting was different. It was quicker to turn down the shank on the holder than move the ram assembly. Later a collar was made to put it back to square one. Do you believe it? Truth is it was a clanger!

Use 20mm dia. EN1A –it is just turning and accurate cross drilling. One bit holder is for 1/8in. dia. tools, the next for 3/16in. and the last for 1/4in. diameter. **Photo 19** shows a holder edging a component clamped to the cross slide.

The unpainted attachment undergoing test. A small shaping operation is being carried out.

Lantern type tool holder. This holder is shown on the G.A. drawing section turned from 1 1/2in. (38mm) dia. bar. Use EN8M if you can get it but ENIA will do.

Mill the end to fit the T-slot with about 3/64in. gap as on the G.A. Drill and tap for the screw before removing from the chuck. The slot can be made by cross drilling top and bottom, then filing out by hand. Remove the last two threads from the end of a high tensile 5/16in. x 1 3/8in. BSF hexagon head screw.

Extended arm tool holder. This holder will have to take considerable leverage upwards so it may be best made from a lump of cast iron if available, otherwise from what you can get to make it. The manufacture should be reasonably easy, just get things square to each other and perhaps bore the 28mm dia. hole to a gentle wring fit of the bar in it.

The bar must have the 1/2in. dia. hole at 90deg. to the axis and dead central, the flat on the underside is to seat the tool bit holder, the flat parallel to it on the upper side is for the two locking screws to bear upon. The clamp plate for this holder is identical to the one for the standard holder but longer. It is suggested that only the 1/8in. wide tool bits are used in this holder. They *must* be sharp and have plenty of clearance or chatter will result.

Right and left lathe type tool holder. Again this component can, with advantage, be made from cast iron if available. It is a simple milling job for the lathe or the mill/ drill. The clamp plate is similar to the previous one except it has only a central fixing stud.

It is intended for use with up to 3/8in. square lathe type tools.

Tool bits. Mine were filed to shape from silver steel hardened and tempered then stoned. They could be made from high speed steel or carbide rod, I will one day make the holder and tool described by Edgar Westbury in his book 'Lathe Accessories' page 97, the tool bit is pivoted in the holder thereby it is relieved on the return stroke.

Note: key ways wider than say 1/16in can be cut with a 1/16in. cutter.

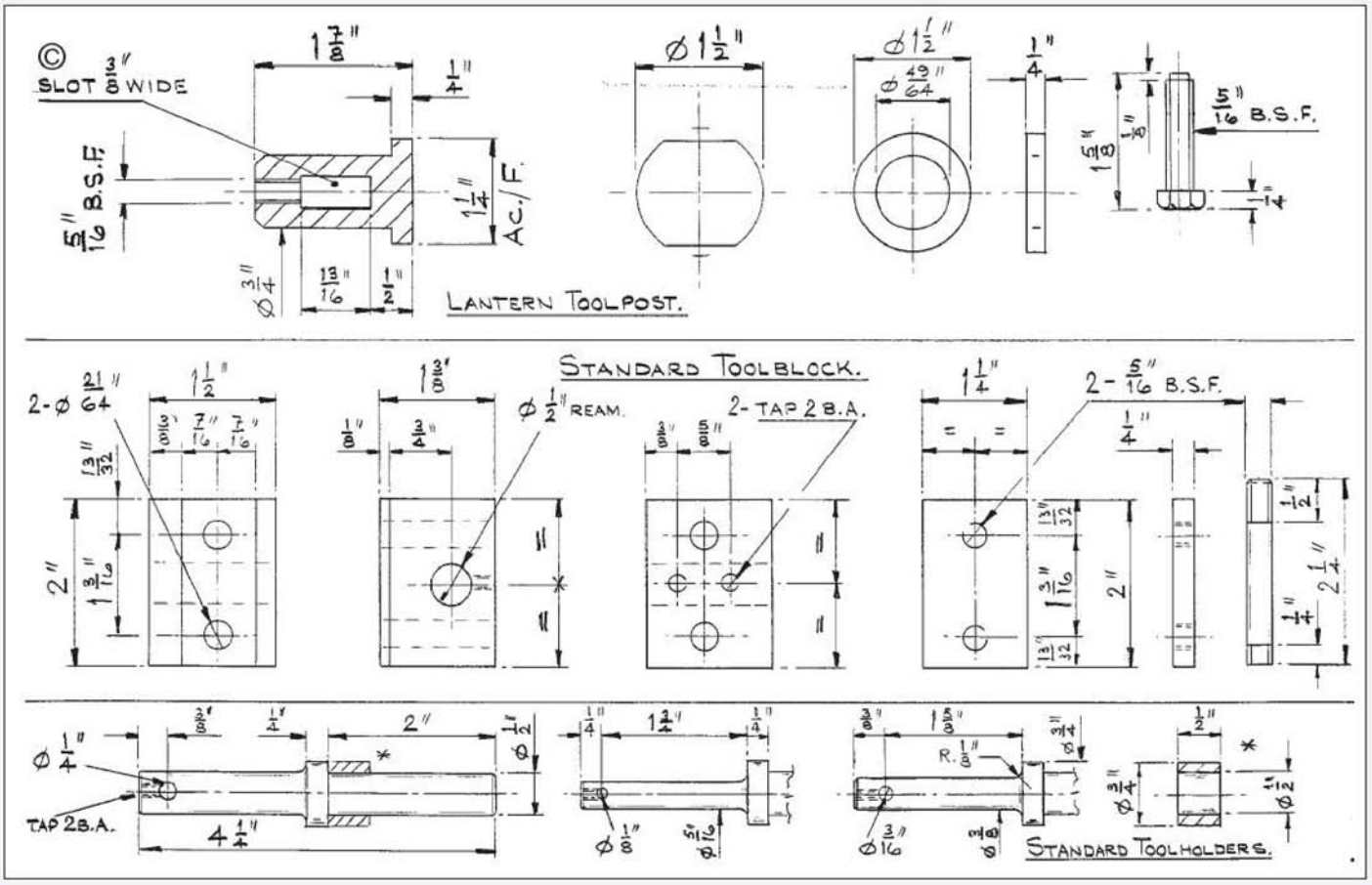

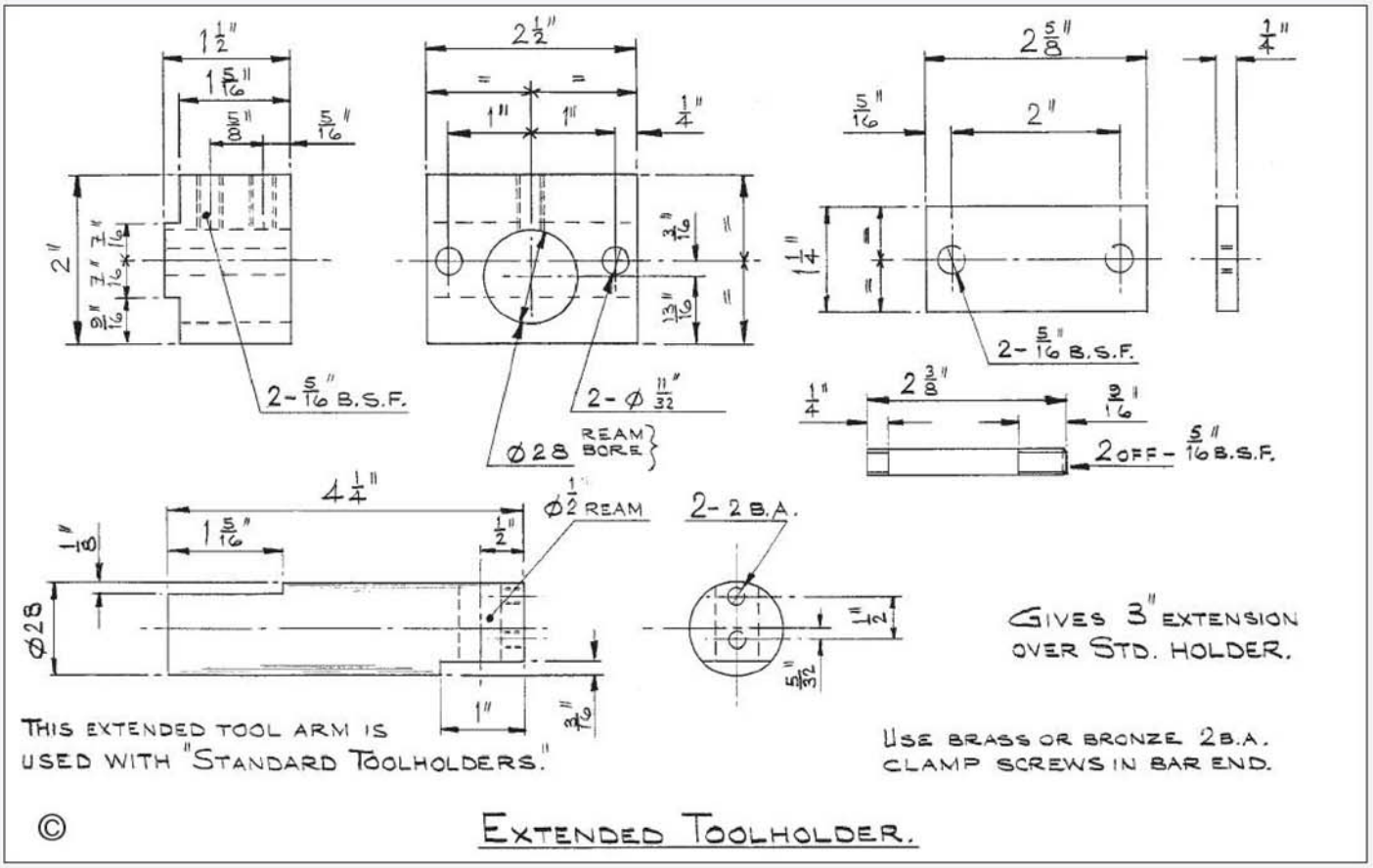

AN INEXPENSIVE COMPACT SPOTTER SCOPE

Neville Frewin
of South Africa explains how to make the most of game-park visits

Small terrestrial telescopes (spotter scopes) are handy optical aids for bird and game watching and are also popular at many sporting events. Many fine scopes are on the market but most are bulky and a bit beyond the means of the parsimoniously minded. An inexpensive 50 by 7 monocular has served me well for years (**photo 1**). It is compact and able to take a fair amount of rough and tumble without complaint. This is a distinct advantage when in a game-park with two grandchildren bouncing around in the car.

Wanting something better without splashing out too much money (the parsimonious side comes out again) set the cogs turning. Perhaps something could be done with a 35mm camera lens. They are compact and usually of high quality. The increasing popularity of digital cameras has put much conventional photographic equipment on the second hand market. Lenses are readily available, usually at low prices. An astronomical telescope eyepiece held close to it where the film would be (the focal plane) showed promise. An erecting eyepiece would be needed so that the image would not be upside down.

From the ubiquitous bottom drawer a tired old 8 by 21 miniature binocular emerged. Yes I have a rather copious bottom drawer - metaphorically speaking. Taking the rubber eye shield off revealed that the combined eyepiece and rooftop prism assembly conveniently unscrewed in one piece. This provided an eyepiece with the right erecting properties (**photo 2**) and proved to be suitable. Mini binoculars are available at reasonable prices should the bottom draw not be forthcoming.

An old 50x7 monocular (bottom) compared to a 70x210 zoom camera lens with fitted eyepiece.

The eyepiece and prism assembly easily unscrewed from the mini-binoculars

The camera lens needs to be set to infinity to correctly position the eyepiece.

The distance between the eyepiece and lens assembly can be adjusted using the clamp screw.

Some lenses have a 'T-adaptor thread' which is 42mm dia. and 32tpi.

The plastic lens cover being used to check the dimension of a click in adaptor.

The eyepiece/prism needs to be positioned correctly. If too far from the lens only nearby objects can be brought into focus. With a few lenses tried the eyepiece could not be brought close enough and focus on infinite objects could not be obtained.

If you decide to make one of these spotter scopes it would be wise to acquire an eyepiece first. Take it with you to the shop and try any available lenses to see if they are suitable. Simply set the lens at infinity (**photo 3**), point to an object some 60 metres (200 feet) away, slowly bring the eyepiece closer to the lens until the image is in focus. If the lens in unsuitable the eyepiece/prism assembly will touch the back of the lens before this happens.

Second hand shops have proved to be quite willing to humour a somewhat eccentric model engineer clutching an eyepiece. Lenses are mainly slow moving items as they are usually made to fit specific makes of camera. A customer who is not concerned about the fit is usually welcomed with open arms. Most shop assistants are intrigued to hear what you have in mind.

Figure 1a shows the optics of a conventional astronomical telescope. Cameras use a lens assembly, usually comprising several individual lenses, which places the film at the focal plane and creates an inverted image (**fig 1b**). The mini binocular eyepiece/prism provides an erected image as shown in **fig 1c**.

Now confident that it would work the little binoculars could be sacrificed. One of the barrels was cut and filed to form an eyepiece holder. The first adaptor was soon turned up on the trusty old ML7 (1965 vintage). The adaptor was bored 1in. dia. and the eyepiece held with a 4mm grub-screw (**photo 4**). This allows the eyepiece to be positioned correctly with ease.

How the camera lens is attached to the adaptor depends on the lens used. Most can be made to a light press fit and held with a small grub screw. Some lenses have a 'T-adaptor' or 'telescope adaptor' which is a 42mm dia. thread with 32 threads per inch (**photo 5**). An adaptor can be made to fit the 'click on' attachment found on some lenses. A plastic cover (**photo 6**) can be used as a guide to get the right dimensions as these are quite difficult to measure on the lens itself.

The eyepieces generally have a focal length of about 7 millimetres. To calculate the magnification divide the lens focal length by the eyepiece focal length. A 70mm lens with the 7 of the eyepiece will give a magnification of 10.

A 70 to 210 zoom lens gives a very convenient 10 to 30 magnification which is excellent for bird watching. 30 is about the limit for a steady hand. Although I obviously cannot vouch for all zoom lenses most do not need refocusing when zooming if the eyepiece is set exactly to the focal plane.

A 300mm mirror lens makes a compact unit but the x40 magnification needs a steady hand.

Photo 7 shows a very fine 300mm mirror lens with adaptor. This is very compact and has a magnification of over 40. It requires a very steady hand or a rest.

We now have several spotter scopes and when a distant animal is spotted in the bush there is no longer a mad scramble for the old 50 by 7 monocular. It must be appreciated that a spotter scope made in this way, although good, cannot compare optically with some of the very fine models available. In addition to being inexpensive they have proved to be quite robust and the grandchildren do not have to be told *"fingers off!"* Enjoy!

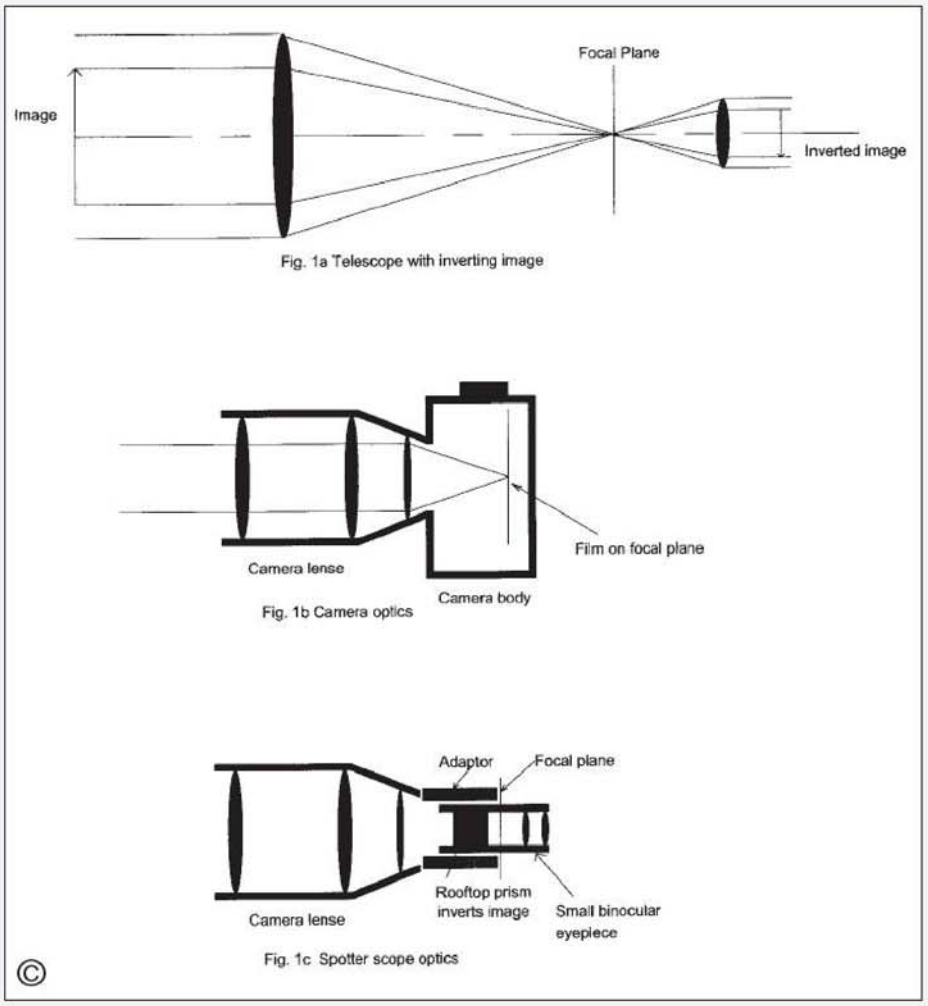

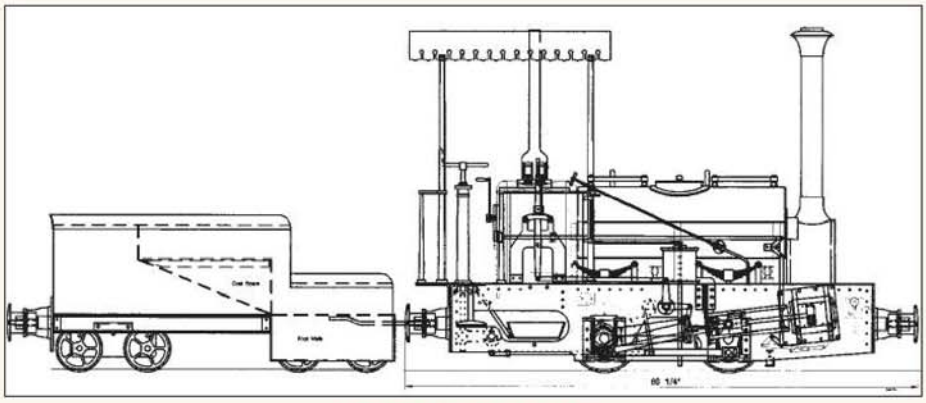

ANNA
A MANNING WARDLE LOCOMOTIVE FOR 7¼in. GAUGE

D.A.G. Brown and Mark Smithers present a new general arrangement drawing to head this page by way of introduction to the tender and driving trolley for *Anna*.

●*Part XXII continued from page 508 (M.E. 4259, 28 October 2005)*

Having finished the last details of the locomotive, it is time to provide a suitable tender for robust operation. There is of course no precedent from the Manning Wardle stable so it is a question of a suitable, aesthetically pleasing design which is comfortable to drive and which holds say 10 gallons of water and 10lb of coal. I sincerely believe that all 7¼in. vehicles should be fitted with continuous vacuum brakes, so that really completes the specification.

The first design consideration is whether it is possible to sit with your head low enough to peer forward beneath the canopy. This is just feasible in the design that I have produced. I am 6ft. 5 in. tall, so I am a fair guinea pig for the role of dummy to fit the seat! The dimensions make it comfortable either to stretch up to look over the canopy, or to hunch up slightly to look below it, thus making one's vision clear of any steam cloud from the chimney or safety valves.

This all makes it essential to form a foot well at the front of the vehicle and say 2 in. above rail level. I am indebted to my good friend Ron Manning (without the Wardle) of the Chingford Society for providing some of the original ideas. The final version of the tender runs on two, four-wheel bogies with inside suspension gear and disc brakes on all axles. The suspension is on disc springs and the layout is suitable for negotiating curves of 20ft. radius. This throws up a raised portion between the feet, just over 5in. high, which doubles as a tunnel for water and vacuum services and also allows coal to be collected easily from the front of the bunker at 'raised floor' level. Thus the split foot well at over 14 x 5in. wide will easily accommodate a wide No.12 foot, though not perhaps one fitted with moon boots!

On bogie and brake design I was considerably inspired by David Hudson's writings a couple of years ago (series starts *M.E.* 4189, 21 February 2003 and ends *M.E.* 4201, 8 August 2003 running in alternate issues) on the subject of driving and riding vehicles and their suspension and braking systems. In arriving at the finished version I have thrown around the shape of the sides and the precise position of the seat. I have also cut away the side above the foot-well, level with the locomotive footplate, which seems aesthetically pleasing.

Tender body

In the centre-spread drawing, the general arrangement of the tender has been reduced in size by 50% to save space on the page, but it does illustrate the layout of the major components. Let us start with the Buffer Beams. Mirroring the forms of those on the locomotive itself, they are laser cut from 6mm plate. On the Rear Beam I have ghosted in the three pieces of angle, which attach it to the tender body. Thus, there are eight holes for either 3/16in. rivets or 2BA screws. It makes sense to rivet the short angles to the beam, allowing for screws to fix them to the chassis, but screwing the long angle in place. The fixings behind the buffers will need to be countersunk for clearance. The buffers themselves are clones of those fitted to the locomotive, castings being called for to make the bodies and round bar for the heads.

The whole tender body is fabricated from 3Cr12 sheet, mainly 2mm. thick, but making use of 3mm for the floor and the back panel of the foot-well. Components will be available tabbed and slotted so that they should fit together easily for welding. I am providing two hole positions in the tank bottom, one for the exit for the injector water supply and the other for a drain plug for rapid emptying of the tank as required.

Another hole, in the narrow section of the floor, is made to pass the spindle of the Injector Water Valve. If these holes are provided small, they can be enlarged to suit.

The Tank Filler is a simple 5in. hole, fitted with a 1in. upstand. However, it is my intention that the plate should be bolted onto 25mm angles, using stainless steel set screws, which are obtainable from Screwfix by post, the smallest size being M6 x 20. The angles should really be stainless or 3Cr12, 2mm material being thick enough for this light duty. Just bend up and drill. If the angle is welded in place it is probably best to drill from the tank top as a template! Not really like me!

Angle supports

To the left of the main tank drawing will be found some details of the many angle pieces, which hold the whole caboodle together. Although the tank section is to be welded I have succumbed to traditional practice insofar that there are rows of round-headed rivets shewing in particular in the front end of the body. On the body drawing I have indicated by numbers all the different angles and their positions; they are all cut from 25 x 25 x 3mm angle and, except where indicated to the contrary, have all holes drilled symmetrically in both faces. No. 1 angle fits both beams, being cut out to clear the slots for the draw gear. The other angle pieces need no amplification.

Chassis members

A stock size of channel, according to my local steel stock holder's catalogue is 51 x 38 x 5mm, which seems to me to be a strangulated version of 2 x 1½in. channel in Christian units. So that is what is needed for the two chassis members. They are drilled at each end for support from the short No.4 angles and are drilled in their webs for fixing the Rear Bogie and the Brake Gear. This method of construction makes unit assembly easy, with the subsequent facility to strip and replace the significant units without trouble. Please note that the rear bogie is bolted to the two short sections of angle iron, whereas the front bogie bolts directly to the front section of the 3mm floor of the vehicle, with 9/16in. spacers between the floor and the Bogie Support Beam (to be detailed in the next instalment).

Couplings

When I originally dealt with the Buffer Beams, I suggested using readily available castings for the Couplings. Upon reflection, however, I have decided to provide such castings and these are detailed in the drawing with this instalment. Taking heed of my experience with this sort of mechanism, I have provided plenty of room in the recess for a coupling link, of which I equip myself with two, one straight and one cranked by 7/8in., to accommodate various heights from passenger cars on different railways. The Shank should be made a good fit in the 3/8in. hole in the casting, with a pin passing half in each component to secure them. Three Couplings are required, one at the rear of the Tender and one at each end of the locomotive. There is room in the length of the Shank to fit a sturdy spring and washers, before the 3/8in. nut, to give a well sprung drawbar. The Drawbar itself is a cranked piece of 5/8 x 3/8in. steel and this is going to be anchored to the top of the Front Bogie Support Beam, thus hinging the front of the tender about an almost perfect axis.

Body work

Other holes in the floor of the vehicle are for attachment of the Front Bogie, by means of a Support Beam whose drawing will be in the next part. As already noted, the Rear Bogie is fixed in a similar manner, but to the Chassis Members by way of a couple of short angles.

We now come to the other parts making up the body. Again 3mm plate is used for the rear of the foot well compartment and for the front of the ▶

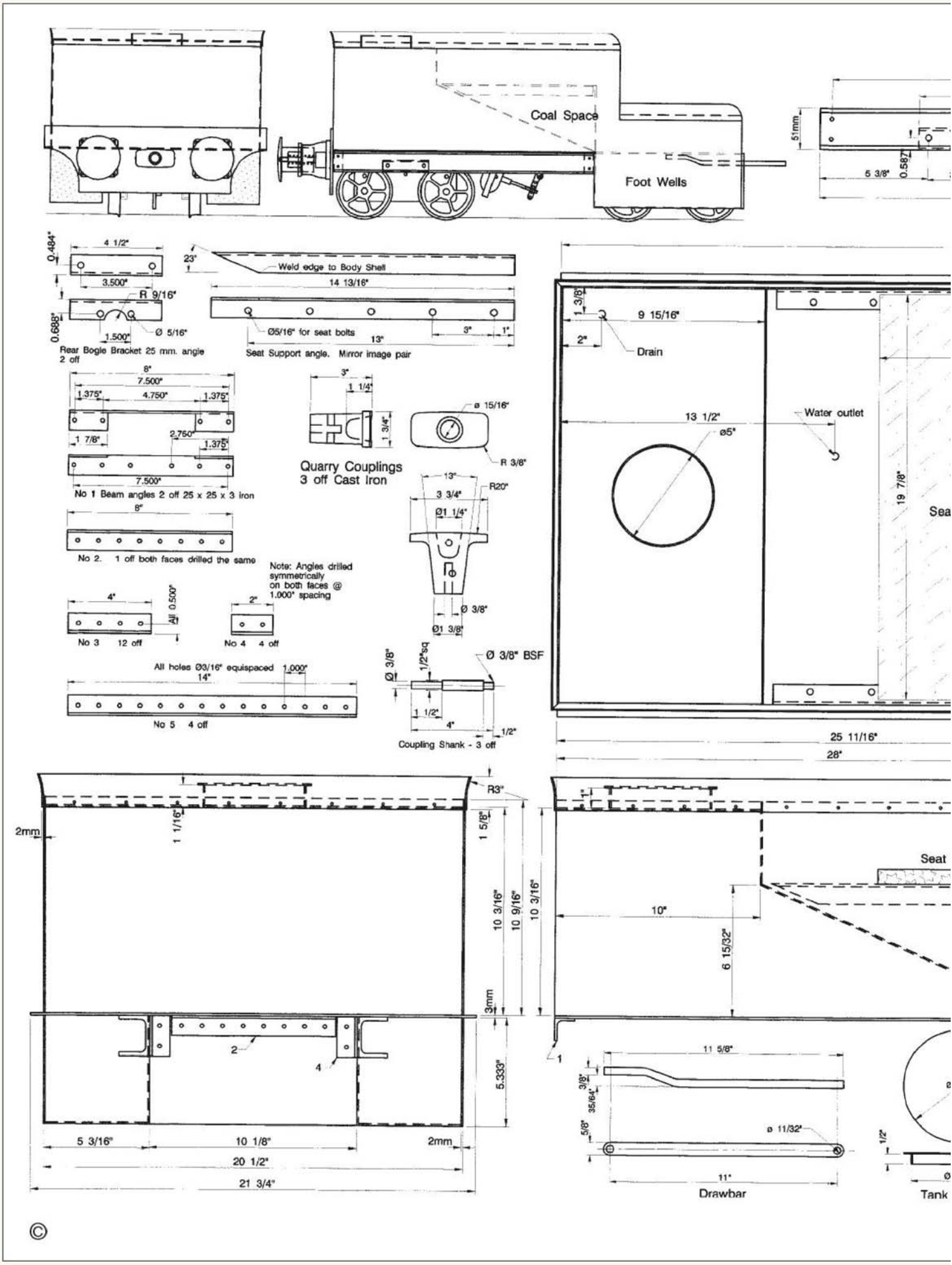
Coal Space
Foot Wells
51mm
5 3/8"
0.587
0.484"
4 1/2"
3.500"
R 9/16"
0.688"
1.500"
Ø 5/16"
Rear Bogie Bracket 25 mm. angle
2 off
23°
Weld edge to Body Shell
14 13/16"
Ø5/16" for seat bolts
13"
3"
1"
Seat Support angle. Mirror image pair
8"
7.500"
1.375"
4.750"
1.375"
1 7/8"
2.750"
1.375"
7.500"
No 1 Beam angles 2 off 25 x 25 x 3 iron
8"
No 2. 1 off both faces drilled the same
Note: Angles drilled
symmetrically
on both faces @
1.000" spacing
4"
All 0.500"
No 3 12 off
2"
No 4 4 off
All holes Ø3/16" equispaced 1.000"
14"
No 5 4 off
3"
1 1/4"
1 3/4"
Quarry Couplings
3 off Cast Iron
ø 15/16"
R 3/8"
13"
3 3/4"
R20"
Ø1 1/4"
Ø 3/8"
Ø1 3/8"
Ø 3/8"
1/2"sq
Ø 3/8" BSF
1 1/2"
4"
1/2"
Coupling Shank - 3 off
1 3/8"
9 15/16"
2"
Drain
13 1/2"
ø5"
Water outlet
19 7/8"
Sea
25 11/16"
28"
R3"
2mm
1 1/16"
1 5/8"
10 3/16"
10 9/16"
10 3/16"
3mm
5.333"
2
4
5 3/16"
10 1/8"
2mm
20 1/2"
21 3/4"
Seat
10"
6 15/32"
1
11 5/8"
3/8"
35/64"
5/8"
ø 11/32"
11"
Drawbar
1/2"
Tank

©

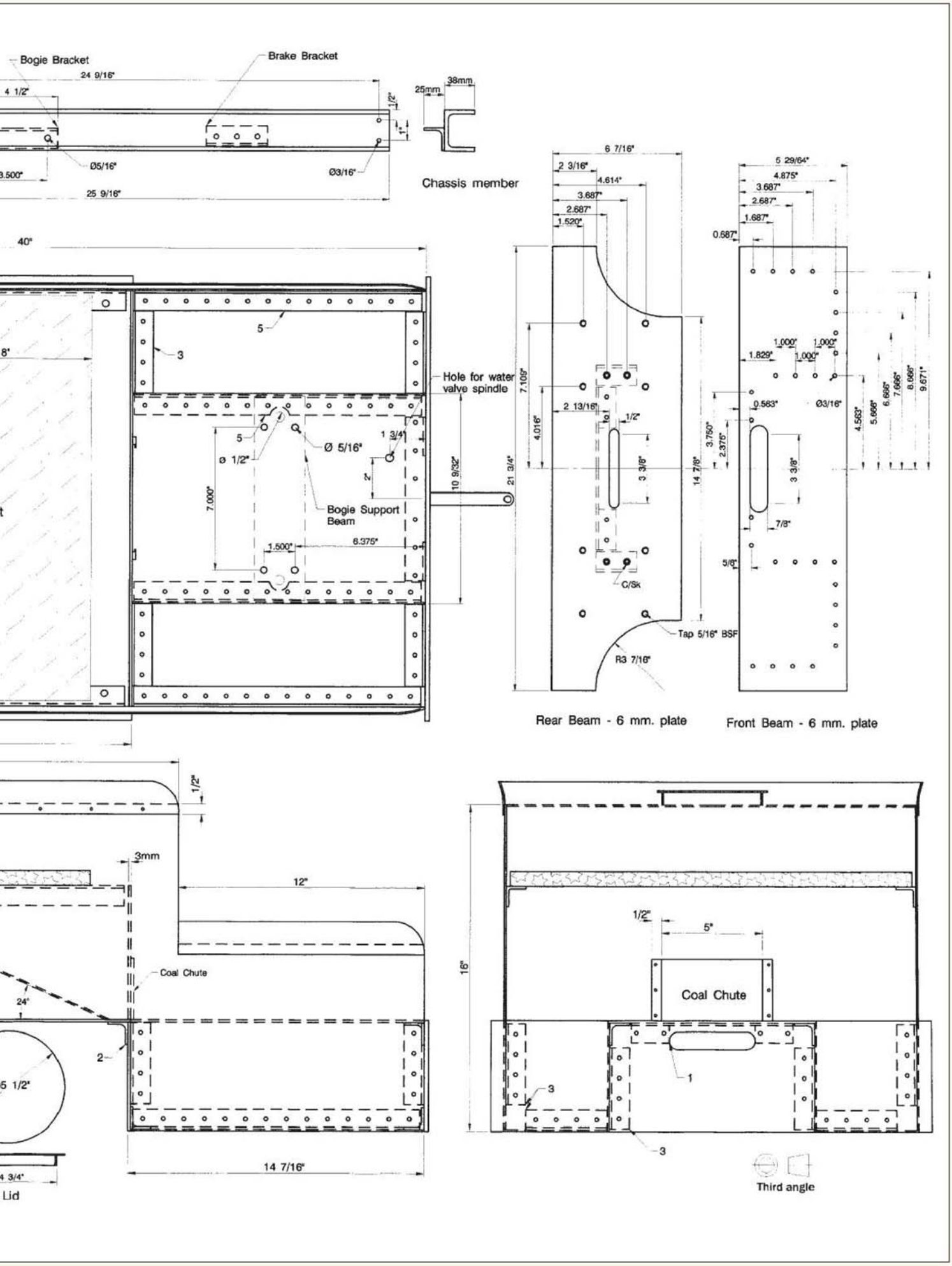
Bogie Bracket
Brake Bracket
24 9/16"
4 1/2"
Ø5/16"
Ø3/16"
25 9/16"
25mm
38mm
Chassis member
40"
Hole for water valve spindle
Ø 5/16"
ø 1/2"
1 3/4"
7.000"
Bogie Support Beam
1.500"
6.375"
10 9/32"
21 3/4"
6 7/16"
2 3/16"
4.614"
3.687"
2.687"
1.520"
7.109"
4.016"
2 13/16"
1/2"
3 3/8"
14 7/8"
C/Sk
Tap 5/16" BSF
R3 7/16"
5 29/64"
4.875"
3.687"
2.687"
1.687"
0.687"
1.000"
1.829"
0.563"
Ø3/16"
3.750"
2.375"
7/8"
5/8"
4.563"
5.666"
6.666"
7.666"
8.666"
9.671"
Rear Beam - 6 mm. plate
Front Beam - 6 mm. plate
1/2"
3mm
12"
Coal Chute
24°
2
5 1/2"
14 7/16"
4 3/4"
Lid
16"
5"
Coal Chute
1
3
Third angle

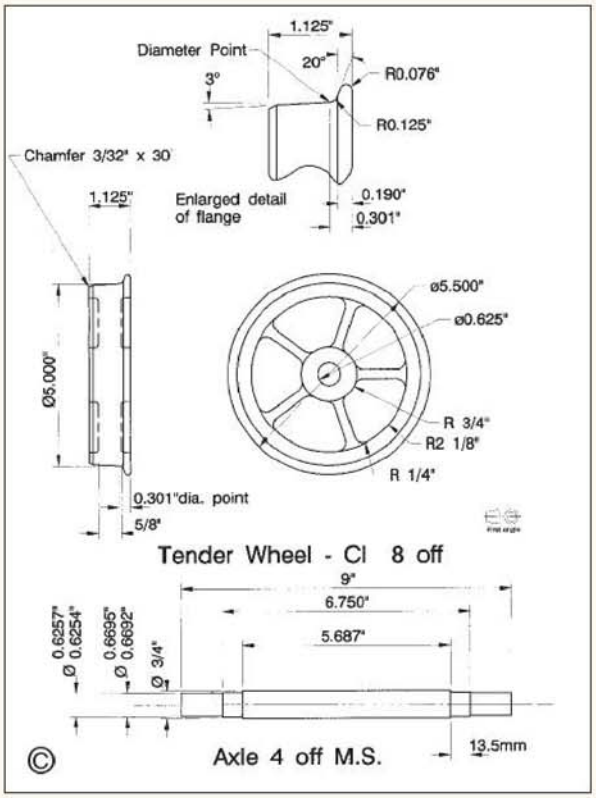

coal bunker, purely for rigidity. The rest is in 2mm material. Since the body side panels are 40in. long they are joined at the back by tabbing to the rear panel, as well as to the floor. The sloping Tank panel is cut short at its front, in order to provide ample room to lay down a weld without impinging on the line of rivets of No.2 angle section. This piece is made in one with the back of the main tank, a 24deg. bend being necessary, but avoiding a further weld.

One piece of ornamentation that I consider worthwhile is the curved addition around the top of both sides and the back panel. The way I see this being made up is to cut a double width of 2mm. sheet, so that it can be rolled up, leaving a short straight margin along each long edge, which contains rivet holes at say 2½in. intervals. After rolling to 3in. radius, each section of the piece can be separated by band sawing and radiusing the ends as drawn. The drawing indicates the top edge of the main plates, which also take the rivet holes. I reckon that ⅛in. rivets look fine in this application. The drop in the top edge of the side sheets in the foot-well area not only makes it easier to enter the tender for driving, but it also makes fabrication easier by avoiding a very long panel for fabrication; dropping the side also did wonders for the look of the thing.

Before welding up the tank make sure that you close the rivets holding the bottom angles (5), the short pieces (4) and the long ones (2) and (1), since these would all be either more difficult or impossible after welding the tank. I am assuming the use of MIG welding, to be done in short lengths with allowance for cooling to avoid distortion. Unless your welding skills are miles better than mine, you may well find that there are leakage paths in particular at the junctions in the runs; so be prepared to run a fillet of car body filler along the tops of all the welds; it really does disguise a lack of perfection! The bottom and inner wall panels of the foot-wells are each bent up from one sheet of 2mm material.

Tank filler

The large hole in the Tank Lid is fitted with a filler cap, which slightly overlaps the upstand. It is essential to anchor this to the upstand, in order to prevent both its loss and it careless destruction of the surrounding paint work. Remember that you will often get help from enthusiastic small boys during public running and their dexterous skills and careful nature may not necessarily match their enthusiasm! I would also strongly recommend that you fit a latch to the Lid, besides a hinge. When my Hunslet had its first excursion in an open trailer behind my car, the wind caught the lid and clattered it against the stop, which I had made for it, in no uncertain manner. Admittedly the fitting of a trailer cover has removed this cause of trouble, but the catch still does good service in deterring inquisitive hands from fiddling from the leading seat in the train.

Seat of power

Here is an opportunity to show off in the provision of a good seat, which befits the class of model that you are constructing. In the top of the Seat Support angles you have drilled a row of holes. The seat may be located at three different positions at 3in. intervals, which should suit any driver between 4ft. 9in. and 6ft. 6in. high. The seat should be an 18mm slab of marine plywood, readily obtainable from a friendly chippie. It should be padded with polyurethane foam and trimmed with leather. I have an antipathy to synthetic leather cloth ever since I worked as Works Engineer for ICI's factory in Suffolk. The next-door works which supplied us with services used to make leather cloth and there were always good pickings to be had from their scrap bin. I was able to source sufficient material for machine covers for my workshop, but there is no doubt about its poor mechanical strength and ability to tear. In any case, it does not 'feel' like leather.

The way I solved the problem of a leather seat was to take the wooden base down to our local car trimmer, who makes his living in the company of mainly vintage cars. In reply to my request for a piece of red leather, which would blend well with the tender which I was painting in Midland Red, he disappeared into his store at the back of the workshop and came out smiling. *"You can have this piece"*, he said, clutching a quarter skin of very soft hide; *"it is an off-cut from one of the three hides which I used for re-upholstering an Hispano-Suiza"*. Marvellous, I thought, as the colour was a good tone for my requirements. That would put the locomotive in fine company. *"How much would you want for that?"* I enquired, tentatively, thinking that the H-S connection would put it out of reach. *"£20"* he said. I thought for a couple of seconds, looking at the old Rolls which he was in the middle of fitting out: *"How much to trim my seat with it, then?"*, thinking that a modern creation might be eschewed. *"£40 total to you for cash"* was the considered reply. We clinched the deal and I collected the fine result a few days later, far more elegant than I could ever have made it. There is no doubt that leather is a hard wearing and tolerant material that, even when stained with coal dust, can be cleaned and made to gleam in no time at all.

Starting on the bogies

In designing the bogies I have kept the running gear inside the wheels, so that they will have minimum overhang, thus minimising the width of the upstand between the foot-wells and maximising the width of the size 12 footprints. The bogie frames are compensated, each wheel able to follow irregularities in the track. I have chosen self-aligning ball races of 17mm bore to support the wheel sets. These will be available, sourced from the far east at a very reasonable price from Arc Euro Trade of Syston, Leicestershire. We have a good deal from them, especially for *Anna* customers, so if you are interested, mention that name to Ketan (tel: 0116 260 5805) and he will provide the correct bearing for the purpose. In the best interests of economy I have specified bearings No.1203, which are 17mm bore, 40mm O/D and 12mm wide, without seals. They will be fitted in such a way that flying dirt should not be a problem and, quite honestly, their duty is so modest that they are unlikely to be troubled by tiny amounts of extraneous matter getting into the races.

Starting on the wheel sets, as the drawing illustrates, the four Axles are made of mild steel. The wheel portions are a press fit in the wheel bosses, a diameter specified to comply with the reamed size of a normal ⅝in. dia. hole. The lands for the bearings form a light press fit for the inner races, which must not be fitted until after the bogie frames have been prepared. The bores of these parts will be a slightly lighter fit than their counterparts on the axles.

Now I have a confession to make: when I first started this series I received a severe rebuke from my good friend Alf Case of the SMEE for daring to specify a tyre profile for the driving wheels which does not conform to the 7¼" Society's gauge standards. So, I eat humble pie and say thank you to Alf! I hereby put matters right in the profile of the Bogie Wheels, which is correct. I am amending the profile of the driving wheels on the master drawing. The width of 0.190in. refers to the distance across the flange at the point where the ⅛in. radius starts and where it joins the portion inclined at 20 degrees. The machining method recommended by Alf is to turn down the 5.000in. dia. right along to the diameter point (0.301in. from the back of the flange); next the 3deg. tread is turned, with the chamfer at its outermost point. Next the 20deg. flank is formed to the thickness shewn, which is then blended with the tread at the diameter point using a ⅛in. radius tool. The radius is finally applied to the flange tip. It is also well worth reading David Hudson's advice on machining wheels in the 2003 series mentioned at the start of this article. Castings for the wheels are available with the set of parts for the locomotive.

Sorry for starting the wheel sets before publishing the layout of the bogies, but page space has dictated this slight illogicality in order. The rest of the story will be told next time in the penultimate article in the series.

● *To be continued.*

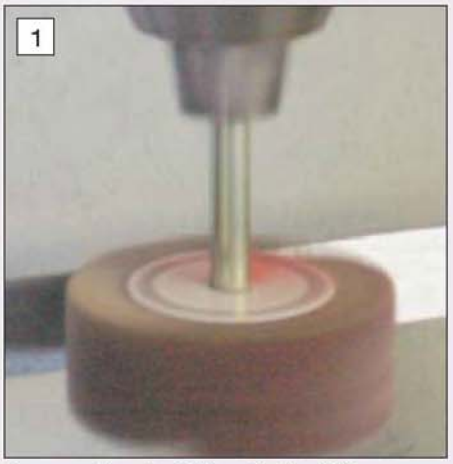

An emery flap wheel driven by the drilling machine can be used to finish parts.

Using a button to correctly position a drilled hole in a piece of bar.

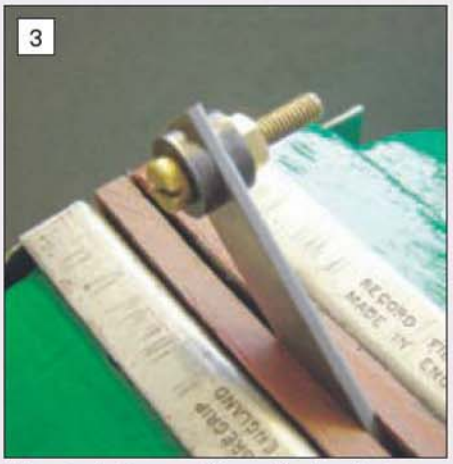

Using two buttons as filing guides in order to radius the end of a piece of bar.

CHANGING HINDSIGHT INTO FORESIGHT

Mick Appleyard
now discusses some workshop related topics.

●*Part IV continued from page 511 (M.E. 4259, 28 October 2005)*

It is not my intention to detail how to make each model component since anybody attempting to build a model will have at least a general understanding of model making and general machining practice. The following details some general topics, which have helped me during my projects.

Bench work

Surface finish

Whilst obtaining a good surface finish is a basic process I am often asked how to achieve it. I am talking here of hand finishing. First make sure that the surface does not contain any heavy tears in it. Then, using a 6in. fine file, draw file the surface. When the surface looks even change the file to say a 4in. dead smooth file and continue to draw file until the surface is flat and even. Remember to rub a little chalk into the file teeth to prevent clogging.

The author is available, at reasonable times, at 17 Aintree Road, Lords Wood, Chatham, Kent ME5 8PY; tel: 01634 669875; e-mail: mickapple@aol.com
The articles can be obtained in book form from the author together with a CD-Rom containing the photographs.

You can now hold some fine emery cloth under the file, while draw filing, to finish off. Another good way to finally finish off is with an emery cloth flap wheel held in the pedestal drill running at high speed. Start with an 80-grit wheel to remove all burrs and sharp corners and finish off with 120-grit. Hold the work against the wheel and move it along. This will take out all the hard work, and the job can then be finished by hand (**photo 1**).

Rotary file

If you have trouble draw filing the inside of a small radius then place a fine round file in a pistol drill and rotate it at low speed, say 200rpm. This can be held into the radius to clean it up. A piece of emery cloth can be placed around the file to finish off.

Toolmaker's buttons

These can be used to centre a hole in a piece of square/flat or round bar, or used as a guide to file a radius on its end. In addition they can be used to position a hole accurately using slip gauges and a clock gauge. They are best made of silver steel and hardened and are often used in pairs. Since they are quick and easy to make and can be reused, it is often not worth setting up the milling machine to machine a radius. Select a piece of round silver steel the same diameter as the square/flat bar being drilled (or turn the outside diameter to size). Drill a hole the same as the hole required, part off the button about 1/8in. wide. Part off the second button. At this stage it is worth making a few spares, as they will only take a few minutes. Heat the buttons to cherry red and quench in cold water.

1: To drill a hole in the centre of the bar place a pair of tool makers clamps over the end of the bar with the button on top and positioned where the hole is required and clamp up. Drill hole, which will now be central (**photo 2**).

2: To radius the end of a piece of square/flat, drill as 1 above, place a button either side of the bar with a bolt through the bar and buttons and tighten up. File radius. Since the buttons have been hardened you will not be able to file them and thus ▶

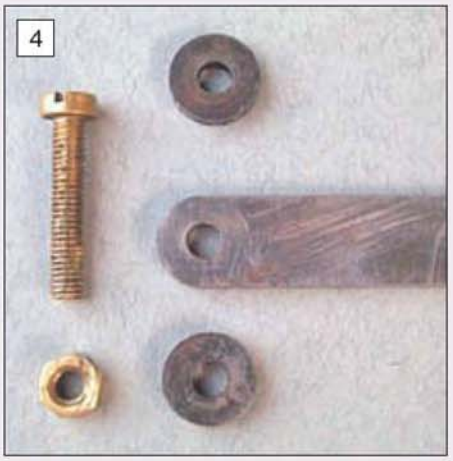

The bar with the radius shown with the two buttons used to help produce it.

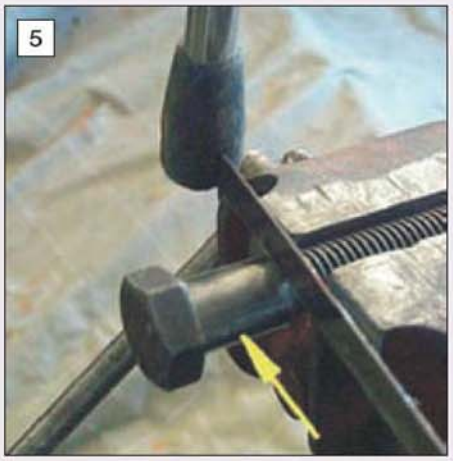

Using a special button to aid cutting off bolts to a predetermined length.

Buttons can be used as alignment aids when assembling engines.

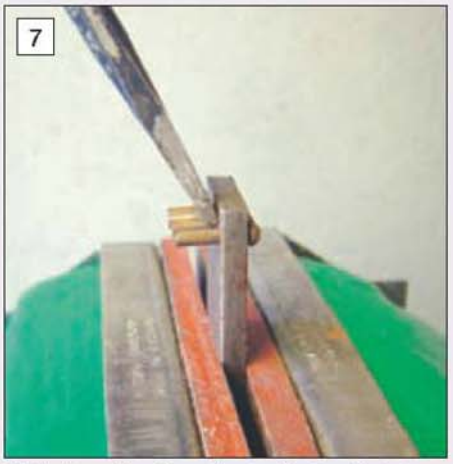

Method used by the author to shorten rivets to a predetermined length.

A gripping device for studs and bar can be made by drilling square stock and cutting it in half.

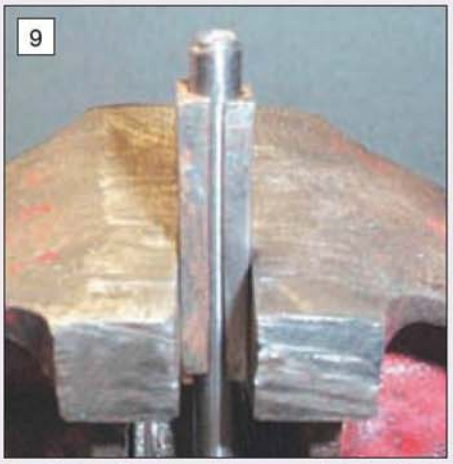

The device allows round components to be firmly gripped without the risk of damage.

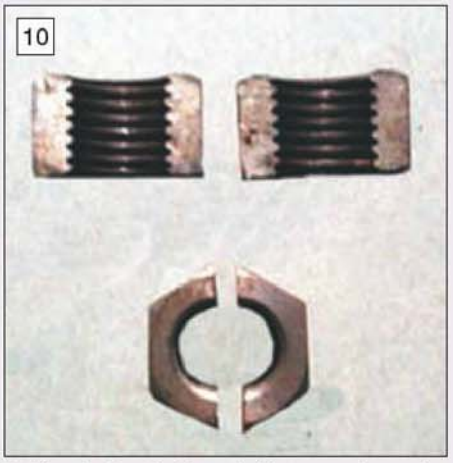

Holding devices for threaded items can be made by sawing a nut in half.

Selection of jigs made by the author as an aid to accuracy and ease of manufacture.

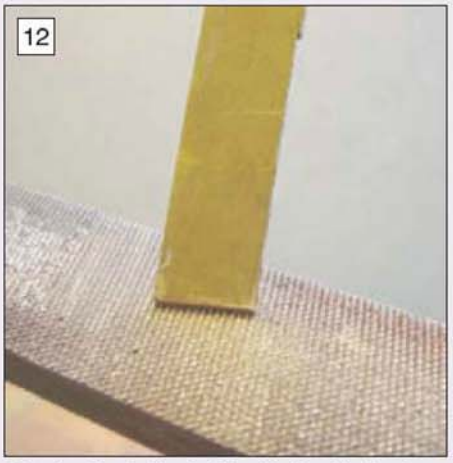

Cleaning the teeth of a file with the aid of a piece of brass.

will get a clean radius (**photo 3**). I keep all my buttons bolted together in a tin for further use.

Stud cutting button

Cutting studs and bolts to length can be easily achieved by using the following method:

Cut a piece of round bar whose diameter is greater than 3-4 times the diameter of the bolt/stud, and slightly longer than the bolt length. Face off the bar, and drill a clearance hole through bar for the stud/bolt being cut. Turn the cutting button round and face the other end to the final stud/bolt length required. Put the button over the stud/bolt and cut off the surplus (**photo 5**). I keep a tin with these together for further use. You may wish to make them out of silver steel and harden them. Just a note when buying bolts always buy the longest available since invariable they will need cutting to length. The piece of thread cut off can be saved and used as a stud at a later date.

Alignment buttons

These are used to align concentric components. It is basically a piece of bright mild steel whose outside diameter is a good sliding fit into a hole, and its bore is a reamed hole the same diameter as the component being aligned. These are machined concentric. They would be used in the situations where you wanted to hold a piston shaft central in the stuffing box while alignment is carried out (**photo 6**).

Length of snap head rivets

To determine the free length of the rivet to form the snap use the following as a starting point, which will dependent on the dome end depth of your rivet snap:

1/16 to 1/8in. diameter, allow 1 1/2 times the rivet diameter.

3/16 to 1/4in. diameter and over allow once times the rivet diameter.

Make sure that the rivets are fully annealed before their use, and make a test snap on a similar piece of scrap material. Determine if the rivet free length needs final adjusting.

Cutting rivets to length

This can be a very tedious job, however I have developed a method, which is quick and effective. Mill a piece of flat bar such that the thickness of the bar is equal to the length of the required rivet, say for a length of 1 inch. Drill 4 holes 0.002-0.003in. larger than the rivet diameter, spaced 3 rivet head diameters apart.

Cut the bar to length such that when clamped in the vice jaws the bottom touches the base of the vice and, say, 2in. is protruding above the jaws and tighten. Place the rivets in the holes and, using a sharp cold chisel, cut each to length using one sharp hammer blow (**photo 7**). Remove the rivets. (Note, I have a chisel sharpened on one side only) I have found that if you drill too many rivet holes the rivets tend to fall out before they are cut.

Holding studs

Cut a piece of square bar to a suitable length. Drill a hole down the centre, the same diameter as the stud to be held. Cut this piece in half down the diameter and deburr (**photo 8**). The two halves can be fitted around the stud and clamped in the vice to hold the stud (**photo 9**). No damage will be done to the stud. Keep these safe, in a container for reuse.

Holding threaded studs using half nuts

If you cut a nut in half across the diameter and deburr the two halves, the half nuts can be fitted around the stud thread and clamped in the vice to hold the stud (**photo 10**). No damage will be done to the threads. Keep these safe in a container for reuse.

Numbering of components

Many of the components you make will be duplicates and when assembled will require hand fitting. Items such as connecting rods, cams, eccentrics, etc. should be stamped with a unique I/D so that when dismantled for painting etc. can be reassembled correctly. Always stamp the number in a place where it will not be seen on the finished model.

Jigs

During the making of a model you will be making many individual components, which will eventually be assembled to form the completed unit. Much time will be wasted if each component is marked out and drilled individually, together with the fact that inaccuracies will creep in and parts not line up properly . It is therefore good practice to produce a jig for appropriate components. Where tapped holes are required in one of the components always drill the jig with the tapping size drill. Then open out other holes with a clearance drill.

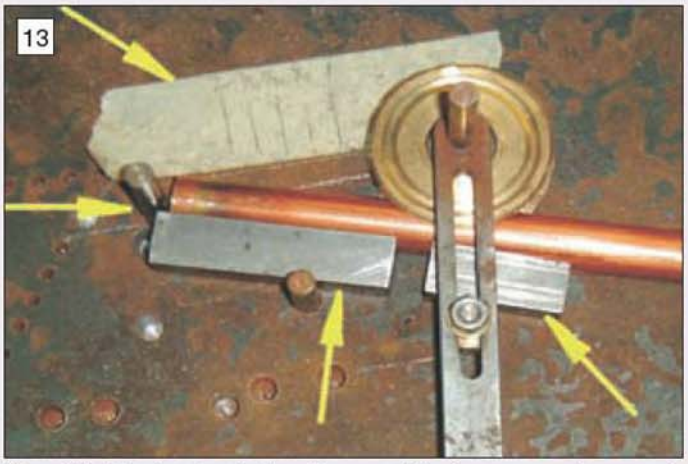

View of the tube bending device with some of the key components arrowed for identification.

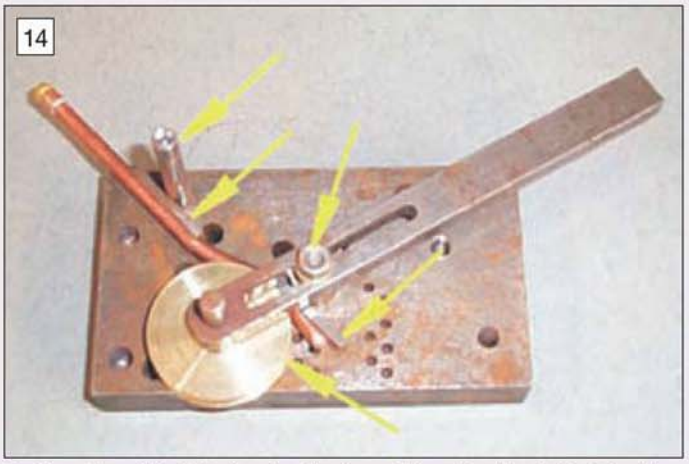

Another view of the tube bender. The base plate or bending table is 3 x 5in. mild steel.

Over a period of time many jigs will be made and I suggest producing a table of these Jigs (see below). Each one should be stamped or marked with the jig number. Also stamp/mark the top face of the jig with 'T' (top). Mark the corresponding jig number on the drawing; this will make it easier to locate at a later date. Get into the habit of storing all jigs in a single sealed container, this way you will know where to look for them. This practice will save many hours of machine set up time.

Shim

A good source of shim is soft drinks and beer cans, some of which are aluminium alloy with thickness between 0.006 - 0.010 inch.

File cleaning

To restore your files cut a piece of 1/16in. brass plate say 3/4in. wide, lay the file on the bench and hold the brass plate at an angle of about 30deg. to the file and push the plate across the file parallel with the file teeth (**photo 12**). This will cut the file teeth form into the brass plate and will clean them out. Once clean rub some French chalk into the teeth to prevent them clogging. Remember to file the end of the brass plate square, before using it on another file, as this will be bound to have a different tooth form.

A rotary wire brush in a pistol drill can also be used to clean file teeth. Fit the file in the vice and run the wire brush across the file running parallel with the teeth.

Bending small diameter copper pipe

When bending any pipe around a radius the natural tendency is for the pipe to flatten out on the extrados (outside) of the bend. To overcome this we can use a tight fitting spring inside the pipe as plumbers do, or bend it around a former. Since springs are not usually available in the sizes, which the model engineer uses then the former is the best option. The bending jig consists of a table, various formers, a clamp, various 1/4in. dia. anti-rotation pegs, a bending arm and various extrados slippers.

The former is held in place with a centre spindle and the pipe to be bent is fitted into the former. The bending arm and roller is fitted to the former centre spindle. A slipper is fitted to the pipe extrados and the roller adjusted so that it touches this. A further anti-rotation slipper is fitted to the free end of the pipe and this is held against the anti rotation peg. The slipper protects the pipe from being damaged.

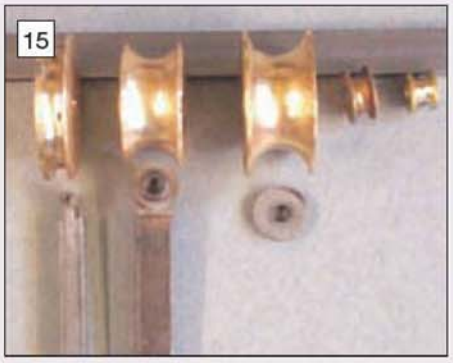

Selection of brass tube formers with the tools used to turn them.

A clamp may be required on the free end of the pipe as when bending starts there is a tendency for the pipe to pull around the former in the direction of rotation. I started off by drilling a few holes for the pegs in the table, their locations to suite the former being used. Other holes were added as new formers were made. The same goes for the clamp position.

Making the bending jig

Making the former (intrados of bend) The main points in making the former is to ensure that the depth of the radius is greater than half the diameter of the copper pipe to be bent and that the radius to be bent is not less than about 4-5 times the diameter of the pipe.

To cut the radius we need to make a lathe tool. This will consist of a piece of square bar (shank) to hold the cutting tip. This will need to be narrower than the tool tip. For small diameter pipes make it thicker in height than width to give it some strength. The thickness will depend on the final tool centre height. The tip is made of a piece of silver steel the same diameter as the copper pipe to be bent. Set it to run concentric and face off, Machine a 5-7 degree angle on the end. As this will be bolted onto the tool shank with a small Allen screw we need a clearance hole up the centre. Now part off the tip and ensure that there is no land on the cutting edge. While set up make several spares.

Rub the cutting face on an oilstone to obtain a good finish and check that the cutting edge is sharp. Heat to cherry red and quench in cold water, and clean the face with emery cloth. Reheat to light straw colour and quench in cold water. Rub the face on oilstone to sharpen the cutting edge.

I make my formers out of brass as it is easy to machine with the made up tool tips. Place the brass bar into chuck with the minimum protruding and machine the outside diameter to the required former diameter. Bolt the tip onto the shank and set up in the tool post. We can now plunge cut the tool into the bar to the required depth (at least 0.050in. deeper than half the pipe diameter). We will also need a hole up the centre to take a centre shaft. I have standardised on 1/4in. diameter. When the former is finished part it off leaving a small land on each side of the radius (**photo 15**).

Making the former (extrados of bend)

We will need to protect the extrados of the bend while forming it to stop the bending roller from digging into the annealed copper pipe and flattening it. Take a piece of square bar slightly bigger than the pipe to be bent (5/16in. square for 1/4in. dia. pipe) with a length of, say, 1in. and set up a 4-jaw chuck. Now drill a hole down the centre the same diameter as the copper pipe. Remove from the chuck and saw it in half down its length and deburr. One half is placed over the pipe and the bending roller can now run over this. This can also be used to straighten a piece of pipe by annealing the pipe first, fitting the two halves around the pipe and gently clamping in a vice.

Bending table

My Table is made from a piece of surplus bright mild steel 3in. wide x 5in. long x 3/4in. thick. This is a handy size since I hold it in my vice while bending the pipe. The size is not important but make sure that it is thick enough hold the bending, anti-rotation pegs. The table has several 1/4in. diameter blind holes to fit the pivot, a spindle and the anti-rotation pegs. In addition there are several 1/4in. BSF tapped holes for the clamp. Start by drilling your hole for the pivot arm spindle 1/2in. deep (all holes this depth). Now fit the former in place together with a dummy piece of pipe and fit the slipper on the outside. You can now position the location the for the anti-rotation pegs. Try to keep these close to the former (**photo 14**). The underside of the bench anvil picture 6 is also used for bending.)

●*To be continued.*

Suggested method of jig identification

Jig No.	Drawing No.	Details
1	7AR	Pump Base - Hole spacing to Horn plate
2	3R	3rd shaft - drilling PCD for brass cover

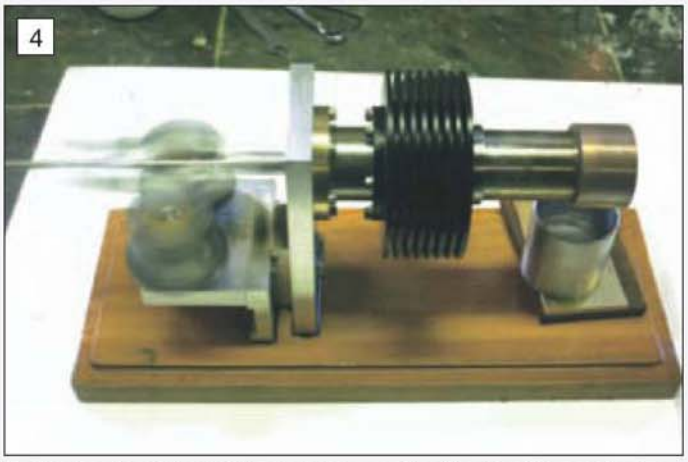

Finished engine being put through its paces, the rhombic drive mechanism being just a blur.

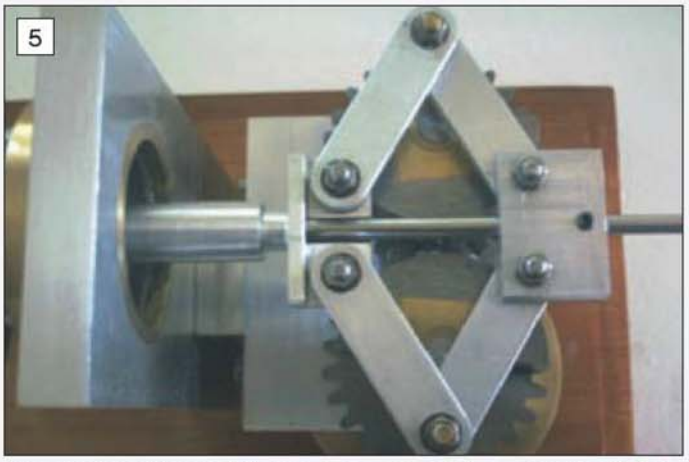

Close up view of the rhombic drive arrangements. The gears linking the two crankshafts can be seen below.

RHOMBIC HOT AIR ENGINE

Les Kerr
of Australia concludes this short series with a description of the burner and assembly procedure

●*Part III continued from page 514 (M.E. 4259, 28 October 2005)*

The burner consists of a tube and end cap. Mine were made from aluminium alloy but any material will do. They were held together with 602 Loctite. A top with wicks and a breather hole could be added.

Assembly

Displacer

The two end caps are silver-soldered onto the displacer tube. It is important to ensure that the end cap that the displacer rod screws into is exactly in the centre of the displacer tube and at right angles with its axis.

Displacer cylinder sub-assembly (engine assembly drawing)

First silver solder the hot cap to the displacer cylinder. Make a gasket out of thick brown paper to fit between the heat sink and heat sink mounting bush. Fit these together using 6BA x 3/8in. hexagon screws. Using 602 Loctite attach the displacer cylinder so that it is true and in contact with the bush. Remove the bush and clean away any excess Loctite.

Pulley mounting base

This is fitted with four ball races. The top two (i.e. those that connect to the balance weights) have an I/D of 1/4in., O/D of 1/2in., thickness 3/16in, flange dia of 35/64in and flange width of 0.04 inch. The bottom two have the same dimensions but do not have a flange. I purchased them from Small Parts & Bearings (usual disclaimer) under the part numbers SFR188A-ZZMC3 and SR188A-ZZMC3 respectively. The bearings were pressed fitted into the plate. The bottom two being flush with the bottom of the base.

Gears and gear bushes

The gears were held in place on the bushes using Loctite 620. In this operation ensure they are running true. Fit M3 x 3mm grub screws to each bush.

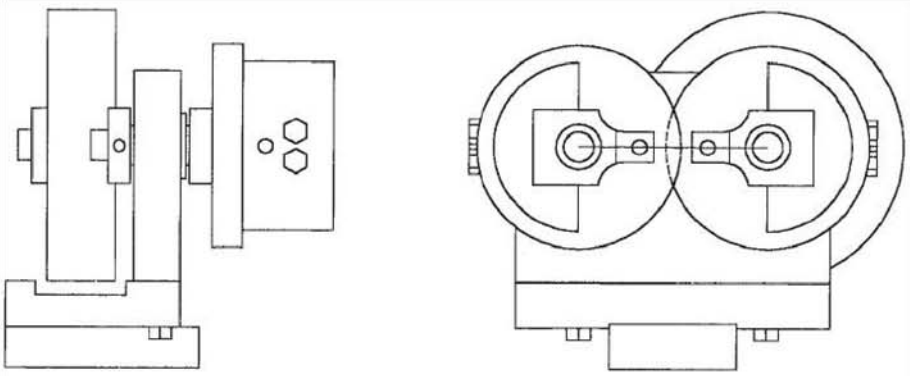

© **Figure 3**

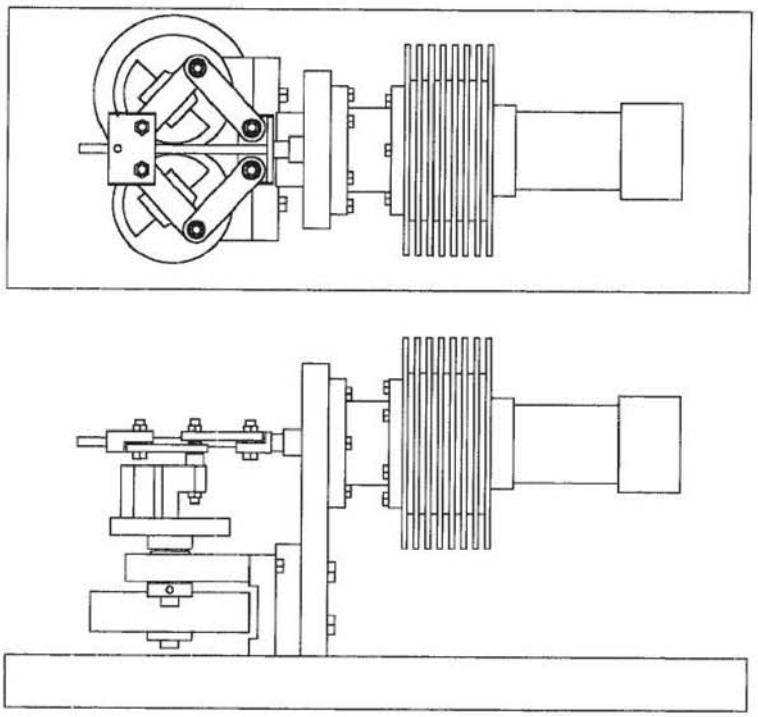

© **Engine assembly drawing**

The cylinder, its mounting bush and the heat sink mounting bush are assembled with Loctite.

Crank web assembly
Using 9/16in. 6BA hex screws bolt the balance weight to the crank web. Fit an M3 x 3mm grub screw to each crank web.

Pulley mounting base sub- assembly
Fit a M3 x 3mm grub screw to the gear collar and an M4 X 4mm grub screw to the pulley. Attach to the base using the 1/4in. dia. gear shafts the pulley, crank web assembly and gear collar so that the crank webs align with a line drawn between the centres of the shaft ends (see **fig 3**). Tighten all grub screws. If all is well the gears should rotate freely on their shafts. Using 5BA x 5/8in. hexagon screws attach the pulley sub-assembly support. Next using M3 x 18mm countersunk screws attach the spacer plate.

Piston sub assembly
The piston, piston link, piston sleeve and top rhombic link are all joined together using Loctite 620. Figure 4 shows the final assembly.

Driver sub assembly (see engine assembly drawing)
The Piston sub assembly, pulley mounting base sub assembly, the rhombic drive and displacer can now be put together (**fig 5**). In this operation make sure you have the correct number of spacer washers between the rhombic connecting links. The sides that mate together are the ones in which the 1/8in. I/D bearings are flush with the surface. The rhombic links are connected using the two web studs and two rhombic link bolts,

Screw the displacer onto the displacer rod and set the distance between the bottom of the displacer and the bottom rhombic link bearing centre line at 4.5 in. (see fig 5). Tighten the M3 grub screw in the bottom link.

At this stage I recommend that you check the height of the centre line of the displacer rod from the bottom of the pulley sub assembly support. Figure 5 shows this as 3.041in. but, if you are like me you always have slight variations due to tolerances adding the wrong way. Once you have this dimension you can complete the cylinder plate ensuring that the piston and cylinder centre lines are at the same height.

Next Loctite the cylinder mounting bush and the heat sink mounting bush onto the cylinder (**photo 6**). The first so that the bush protrudes 0.1in. from the cylinder end and the second so that bush is flush with the other cylinder end. Note the orientation of the holes in each bush.

Attach the cylinder bush to the cylinder plate using 6 off 6BA x 3/8in. hexagon screws. Using M4 x 18mm hexagon screws attach the cylinder plate to the spacer plate. Before you do this make sure the cylinder and piston mating surfaces are spotlessly clean. Leave the screws finger tight until you are satisfied that the piston glides nicely into the cylinder when the pulley is rotated. Finally re-attach the displacer assembly. I mounted my engine on a red cedar base.

Running

The compression of the engine when assembled should be quite high and if the flywheel is turned it should spring back to its mid position.

Oil the cylinder and piston with light sewing machine oil. Fill the burner with methylated spirits and light with a match. Place the burner under the hot cap and wait for about 10 minutes. Rotate the pulley clockwise (looking down on the top) and the engine should burst into life.

Future Improvements

A gas burner could be added. The power output from the engine is related to the pressure inside the displacer power cylinder. One way to increase this pressure is to add a valve and pump by drilling into the thick section of the displacer cylinder adjacent to the heat sink. The pump could be driven by the displacer rod. This is why on my engine I made the displacer rod longer than the drawing.

In the current design the minium distance between the bottom of the displacer and the top of the power piston is 0.2 inch. If this was reduced and the displacer cylinder length reduced by the same amount then the compression ratio would be increased. This could lead to higher output power.

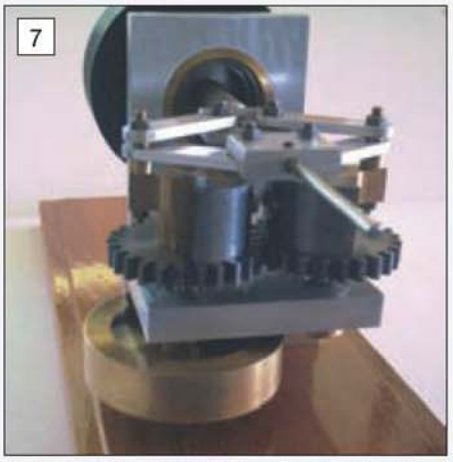

End view of the assembled engine showing the gears and rhombic drive.

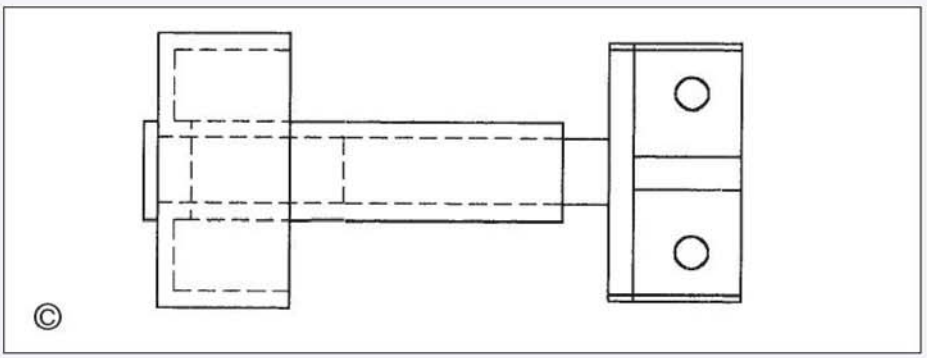

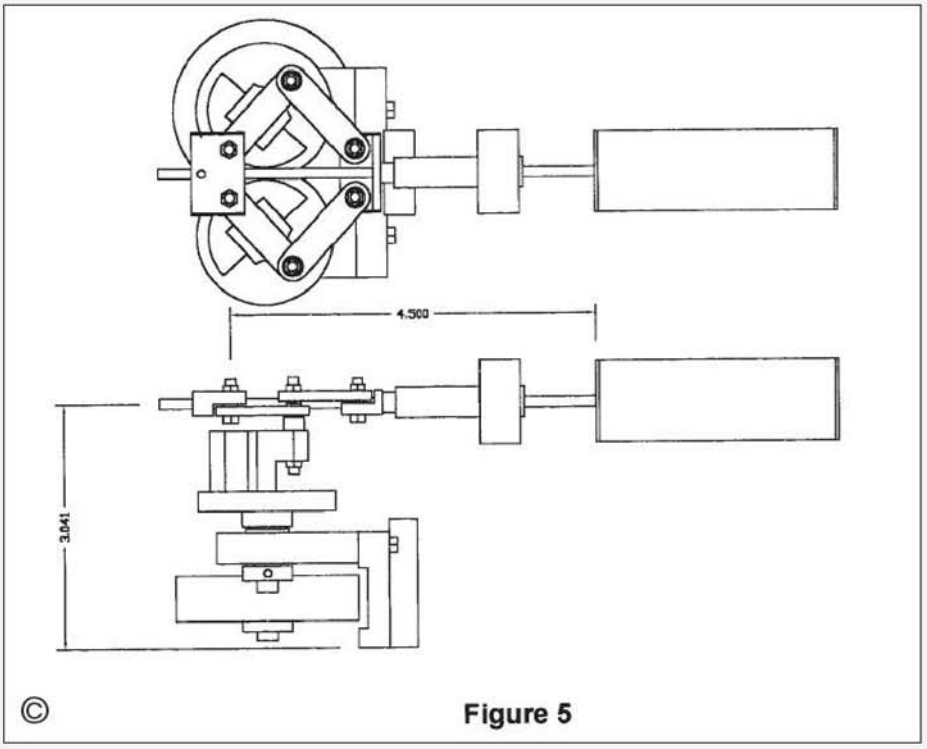

Figure 5

Seats are made from jelutong, edged with beading made from cord.

Gearbox cover carved in jelutong and then painted black.

BUILDING A 1946 MG TC

Stephen Atkinson concludes construction of his 1:8 scale model with the cockpit trimming and remaining external details.

●*Part VII continued from page 516 (M.E. 4259, 28 October 2005)*

The seats and the back squab are carved from wood. I use jelutong for this kind of work. It is even in grain and easy to carve. The two seats are separate whereas the back squab is in one piece across the car. Again for sizes of these it is best that you measure the space you have available between the two sides of the car in between the wooden lining where the back will fit (**photo 49**). The front curve of the rear squab should assume the same shape as the rear of the door aperture. It has a central cut out which fits over the tunnel (**fig 28**). At this point I should interrupt the seating and say a few words about the tunnel. Make it out of 20swg brass sheet to the sizes shown on the full car drawings. It has its lower edges bent out at right angles in order to support the wooden floor panels.

When a block of wood has been cut to length, width and thickness with the grain running from top to bottom for the back squab, shape the profile looking at the end of the block. Now divide the width of the piece into 22 vertical sections. These are then divided by employing a V-tool (a standard wood carving tool). Make reasonably deep cuts from top to bottom. After all the cuts are well established, take a wood chisel and curve each section from top to bottom. jelutong will allow you to finish the curves nicely by carefully using fine glass paper. Around the front and top edges there needs to be something to replicate the beading which is sewn around these edges on the full size leather covered seating. I took a very small woodcarving gouge called a veiner and made a shallow round bottomed If groove all around the edges in question. Into this groove I then glued a length of fine cord. The cord I used was actually sailmaker's material which gives an authentic looking texture to the beading.

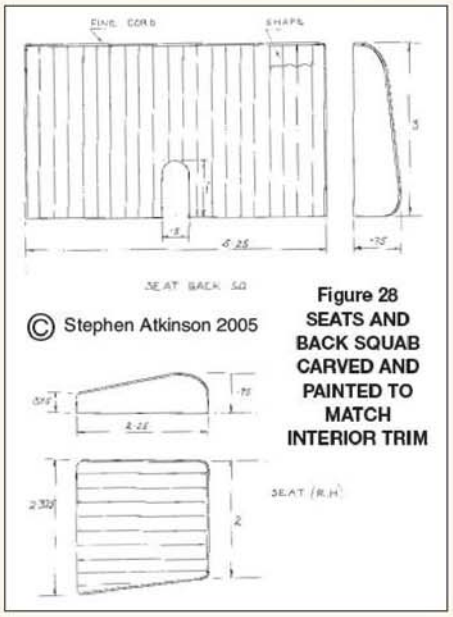

Figure 28 SEATS AND BACK SQUAB CARVED AND PAINTED TO MATCH INTERIOR TRIM

The seats themselves were again cut from jelutong, shaped and the curved strips made to run from front to back. Those of you who remember old cars will know that almost all of them had seating with this type of finish unlike our smoother finished seats of today's cars. The seats should be a tight fit between the tunnel sides and the inside of the bodywork. The ribs you have to carve should line up and nicely follow the ribs carved on the rear squab. You will find that with the seats made to the thickness of those shown on the drawing they are too low as made. Rather than go to the trouble of making seat mountings as per the original which are impossible to see, simply make a wooden block of jelutong for each which is smaller than the seat so that its edges are not visible. Glue these to the underside of the seats and when finally

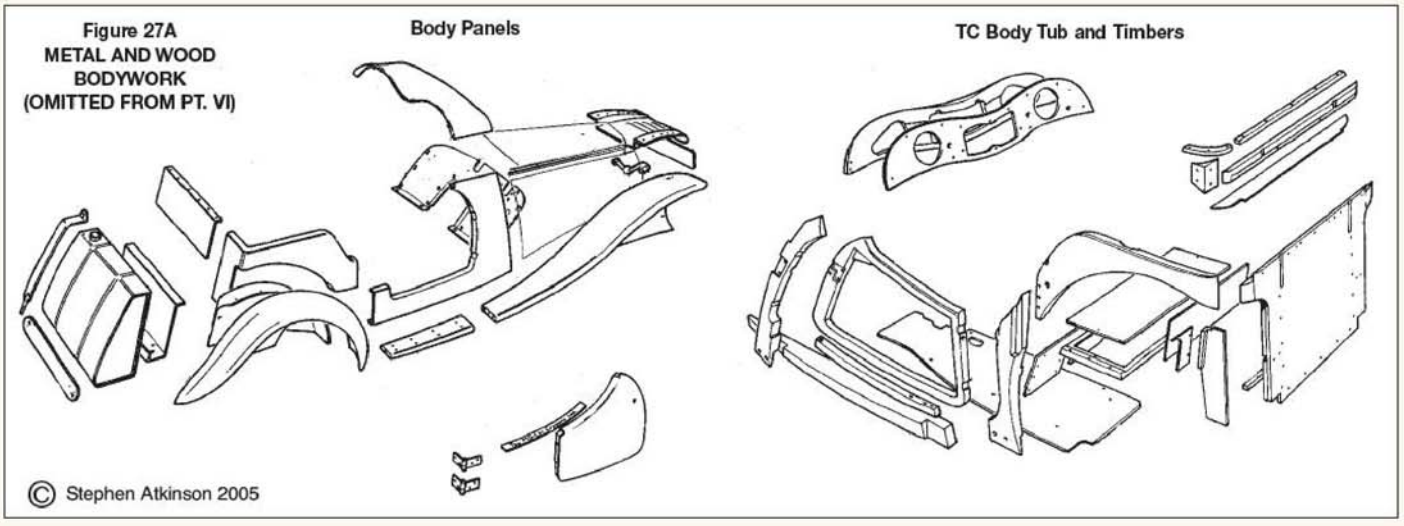

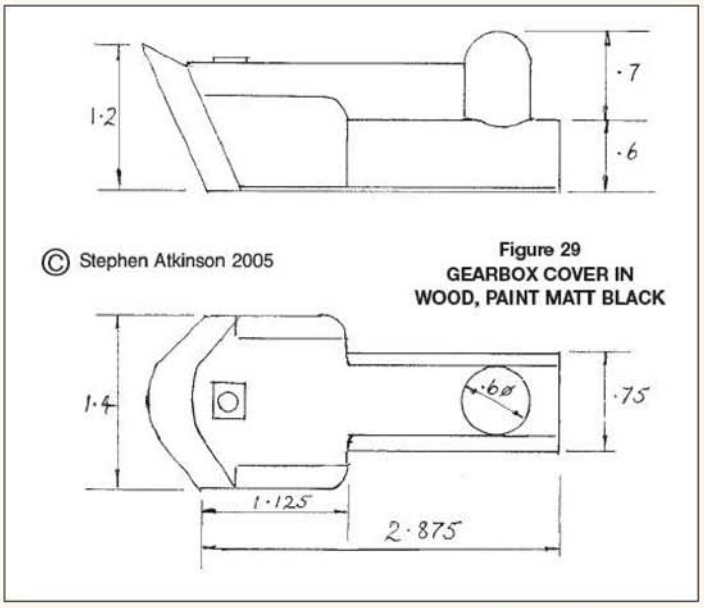

© Stephen Atkinson 2005

Figure 29
GEARBOX COVER IN WOOD, PAINT MATT BLACK

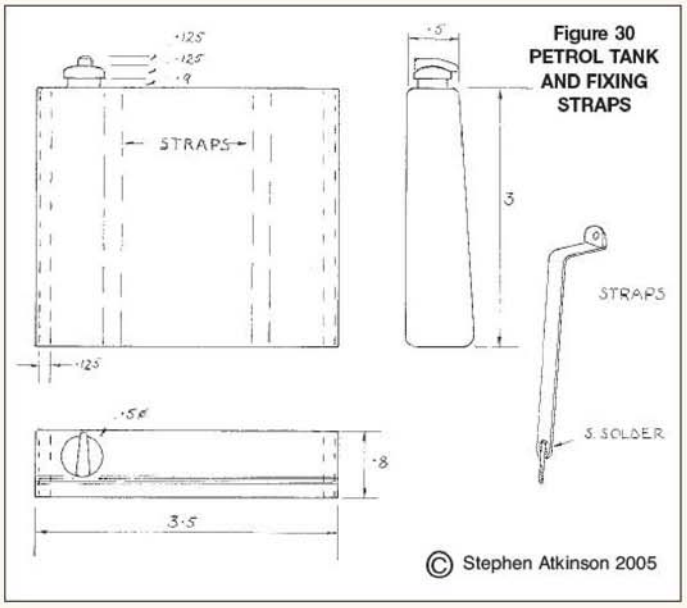

Figure 30
PETROL TANK AND FIXING STRAPS

© Stephen Atkinson 2005

installing them in the car, glue the block to the floor panels.

Internal trim

The floor panels, one on each side of the tunnel are cut to the required size and shape. Make card templates first of course. These rest on the edges you have provided but may need some more small pieces of angle to be used to make a good firm seating for the floor.

The car has a shaped piece of rubber which covers the gearbox and has a sloping front to fit the footboard (**photo 50**). The rear end of this rubber fits over the front of the tunnel. I carved this to shape from jelutong and then hollowed it out to fit properly into position (**fig 29**). When nearing completion the material becomes very thin so do be careful not to split it at the last moment. The gear lever is fitted to the top of this piece, being drilled into the domed top. You might like to turn a small piece of wood for a gear knob like some of the cars have. The gear lever is slightly tapered from top to bottom and looks good in stainless steel.

For trim and finish inside the cockpit you will really need to search around to obtain suitable materials and paints. I found a type of cloth which had the sort of texture I was seeking, but it took a lot of searching before I finally got something to please me. This was then used for the insides of the doors and all around the vertical surfaces of the car's interior. Pieces of thin yet firm card were cut for each section and the cloth wrapped around and glued to the back. These were then glued in place. The door panels also had pockets fixed to give a bit more realism. For carpet which was black in the full size version I used the sticky backed material with a velour type of finish. This was also glued to the tunnel and the area behind the seating. For the seats themselves I gave a coat of sanding sealer followed by a spray of grey primer. When that was properly dried I sprayed with a paint specially mixed for me and put into a spray can. The colour was as near as possible to the cloth material I had used. It really is remarkable what a good firm selling car paints can make and match and then supply it in a spray can ready for use. The cover over the gearbox was treated with sanding sealer and then painted with a semi-gloss black and looks quite realistic as far as rubber is concerned.

Fuel tank

This makes a nice feature at the back end of the car (**photo 51**). As usual it is made for our model from 20swg brass sheet. My drawing gives the main dimensions but it might be just as well to measure up the space you have between the two rear mudguards and the height from the top surface of the rear chassis legs to the top of the back of the body. The tank rests on the chassis and should come 1/8in. below the level of the top of the bodywork (**fig 30**).

Make a wooden tank shaped piece and use this for bending around your piece of brass sheet. When the two ends, which will be at the back of the tank, fit well, then wire up the piece to hold the two edges together and silver solder the joint. Now make two tank ends from the same sheet or for ease of assembly if you wish, make these ends out of 1/8in. thick brass sheet. This makes fitting and soldering easier with the extra thickness. Should you wish it, the ends can be soft-soldered into position. When finished they should be 1/16in. inside the tank ends. On some cars of this type there are recessed pieces fitted inside this position and these extra ends are chrome plated. I have seen cars with and others without these end pieces and so I really do not know whether or not they were standard or extras. I have not fitted them to my model but colour sprayed the whole tank and left it at that.

I should have mentioned that it is not possible to solder up a complete tank such as this without a breather hole. Make this at the top left-hand side so that it can be used to fit a chromed filler cap. This must, of course, be octagonal in shape - almost goes without saying doesn't it!

The tank is held on by means of two straps bent to the shape of the rear of the tank. The top ends of them are best at right angles and fixed to the rear of the car by two 12BA chrome plated screws tapped into the bodywork. The lower ends are screwed to the chassis legs again by 12BA screws. The straps are plated along with the screws, the tank of course being painted with the rest of the bodywork.

Spare wheel

The spare wheel is carried in the open at the rear of the car against the petrol tank. It requires a centre support onto which the hub can be screwed by the 5BA tapping which was made at the time of wheel making.

Two lengths of 3/32in. round MS steel rod join at the position of the wheel centre to a turned base complete with 5BA screw projecting. The two rods make an inverted 'V' to reach the chassis members. Here they require small angle plates to enable them to be bolted to the sides of the chassis legs.

Headlamps

These are turned from brass bar to the sizes given in my drawing (**fig 31**). They are a bit tricky to turn both inside and outside but with care it can be done. With the bar in the 3-jaw chuck do the inside hollowing first and carefully check the depth and curve. I made a template from my drawing, this being a piece of flat brass sheet with an extension on for holding. I kept turning out and checking until I had the correct shape. This was all done by using a round nosed tool with a bit of in and out and side movement too! The outside was then turned to the required shape with just the smallest pip left in the centre. While still on the bar it was removed from the lathe and a hole drilled for the fixing piece. It would be difficult to hold it for this drilling when parted from the bar. The rod was silver-soldered to the lamp shell with a generous amount of solder to give a good looking fillet. Do not forget when hollowing at the front of the lamp to turn a small step or rebate for the lamp glass to fit into.

Once the lamps had been chrome plated I glued a small round piece of clear acrylic inside to represent a bulb. When it came to front glasses I found a very realistic solution. A good friend and fellow model engineer of mine was a clock maker and jeweller. I was showing him my headlamps one day 'down at the track' and he said he would come around as he had an idea. He came with a large box divided into dozens of ▶

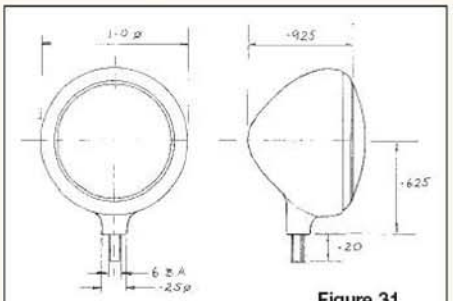

© Stephen Atkinson 2005

Figure 31
HEADLAMP

Petrol tank and spare wheel from rear of car.

sections, each holding a few watch glasses. These were all plastic and slightly curved. He also had the special tool for fitting glasses to watches. This has a large number of claws with a screw device at the top. We found the size of glasses to fit my lamps, he held them in turn by his device, screwed the top adjuster which made the lens more convex, slipped it onto my rebate and then released it. I have glasses in the front of my lamps which, not only look realistic, but without any adhesive are well fixed. Without a friend like mine you could probably find a friendly jeweller who would oblige. I have a badge bar across the front of my car on which I have a spotlight which is smaller than the head lamps but also has a glass fitted. The badge bar, incidentally, also has a horn and AA badge, both with chrome added.

Windscreen

This is fixed to the side of the car by means of two brackets which fit the side of the car shape and have extension pieces running up the sides of the screen framework (**fig 32**). The screws for fixing to the body are countersunk brass and chrome plated like all the bits and pieces making up the screen. There are quite a few pieces to make this part and having them all plated when finished is quite a job, especially if your firm of platers require the pieces to be wired to each other.

For the screen framework itself I found some excellent fine angle brass at my local model shop. This is not the sort of material which the average model engineers supplier will have in stock. I found I could bend the top horizontal member by hand to the shape I needed. The lower piece also has a bend but the other direction for the angle. When the four sides of the screen were made to size and shape and after they were plated, I then glued together the corners and also glued in place the piece of clear plastic material made to fit into the hollows made by the fine angle material. I used epoxy very sparingly for this work and it did make a good firm screen. Finally, the wiper motor and the arms, blades and links were made and fitted.

Finishing

You will yourself work out when the final painting and assembly work needs to be carried out. I tend to get bogged down with some parts on a project such as this, leave them for a while and then start some more interesting section. This was done with such items as the dashboard and the steering wheel. These I find to be especially interesting pieces. They took considerable time which was all very interesting.

However, do make at least most of the pieces before much in the way of assembly takes place. I remember having a most enjoyable few days when all the bits and pieces came together, with a box full of many chrome plated parts gradually emptying.

One of the big finishing processes is, of course, the painting. The car I was using as a guide was finished in a very pleasant shade of blue but I was told by the owner that it was not an official MG colour but one chosen by his wife who nominally owed the car. I felt that a correct colour would be more appropriate and chose MG red and had the internal upholstery of a colour used by the MG company to go with their red paint. Again my local paint supplier was able to mix MG red. As with any brass work, do not forget to use an etching primer prior to anything else. The bodywork is then primed and finally finish coated. The chassis is painted in black, not of the high gloss variety, but one with a little sheen. As mentioned earlier the wheels were all chrome plated as some cars did have plated rims, hubs and spokes.

View of the finished car with the bonnet side lifted to reveal the engine.

A model such as this is obviously for display purposes only it not being a working example in any way. However, the doors do open and close and the bonnet sides may be lifted to display the engine but that is all that really works (**photo 52**). These opening operations are only carried out to show very special visitors! It does really need a showcase of some kind to keep out, not only the dust, but any unwelcome prying fingers!

I have made a walnut base for mine with a rebate around the upper edges and small walnut feet at each corner. Using clear acrylic sheet Perspex I used my strip bender and bent around the two long top corners of a sheet. The two ends were then made to exactly fit the openings. These were glued into position with acrylic cement which makes a firm job and is quite clear when dry. The cover now fits over the model and sits into the rebates formed on the base.

I do hope someone will take up the challenge and make a model MG TC from my many words of description. Good advice would be to find a full size car near to where you live. I am certain that any owner of such a car would be more than helpful once you tell them why you want to photograph and measure up their vehicle. It is one car that seems to be quite plentiful around the country. We have at least five MG car clubs in our Province here in Northern Ireland and between them they have lots of TCs. Best of luck!

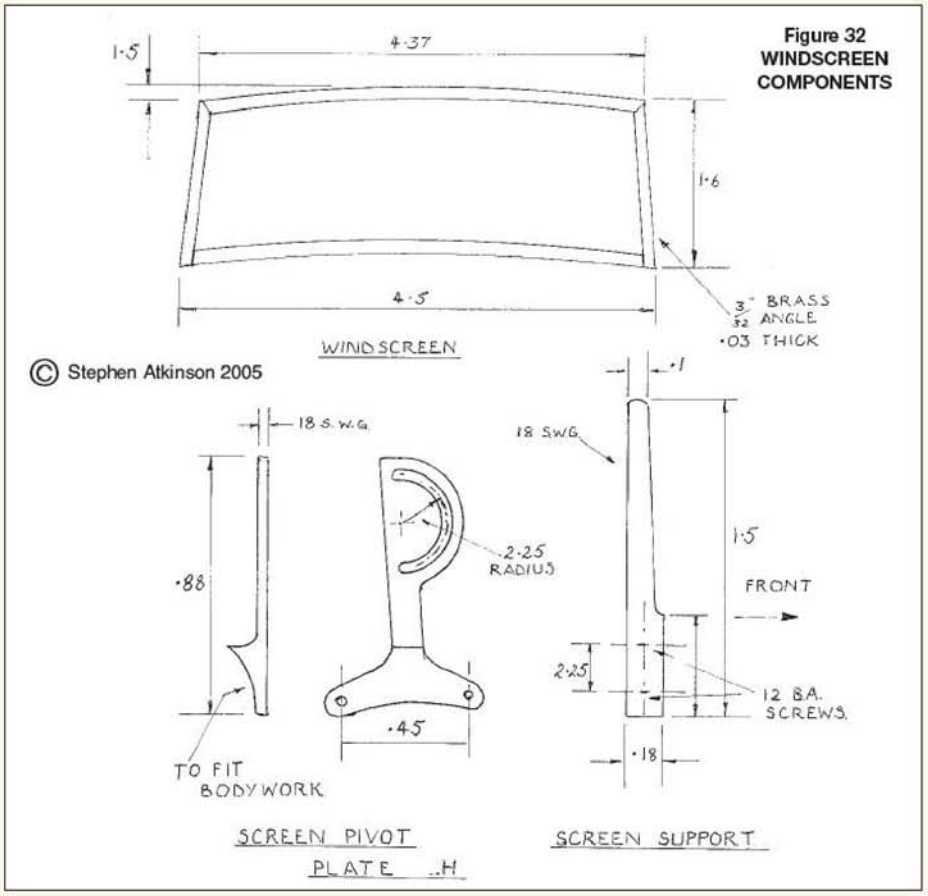

Figure 32 WINDSCREEN COMPONENTS

KEITH'S COLUMN

LILLIAN
A NARROW GAUGE LOCOMOTIVE
for 7¼in. gauge

Keith Wilson
describes the boiler fittings for *Lillian* and *GWRillian* and makes a short excursion into the theory of numbers.

●*Part XV continued from page 523 (M.E. 4259, 28 October 2005)*

For many, the obvious choice for boiler fittings is ordinary commercial fittings. Probably best and cheapest; they are fairly 'hefty' and will stand up to the proverbial coal hammer. I suggest however, that they not be used for the regulator or throttle. A wheeled valve for this looks horrible (in my opinion) and is also a bad control and therefore I describe an internal regulator of more conventional type.

It is very hard indeed to get a regulator absolutely steam tight; unless a screw opening valve is made which sets a conical valve into its seating hole. There are two snags with this type, for if it is down near the front of the boiler there must be a long drive rod for it, best made from stainless. However, the expansion of copper being much greater than that of stainless, it follows that on cooling off, this valve can jam solid, unless you fit a sliding joint of some sort. The other snag is: *"How do we get a proportional opening?"*

This, I submit, is of great importance. Those who have tried driving with a non-proportional regulator will note that if you are the least bit hasty, you will have what is known as a 'jack-rabbit' start. I think the term speaks for itself. With a proportional regulator however, gentle starts are not only possible but also easy. Try backing a heavy locomotive onto its train with an 'all or nothing' regulator. My first full-size drive was backing a Castle from the Stafford Road shed to its train in Wolverhampton Low Level, this entailed crossing over the main lines north, and so I write with some experience. The standard GWR regulator is proportional to a great extent. (For the curious, the operation was successful; locomotive about 135 tons of heavy metal.)

I believe that the ideal is logarithmic, i.e. halfway round at the backhead is about 1/10 the actual full opening. For steam, being a compressible fluid, 'half a hole' certainly does not mean half the throughput. With proportional however, halfway is about halfway, bejabours! (You know just what I mean.)

The design here shown is proportional, not necessarily logarithmic, but most certainly progressive, and has been used on locomotives by the hundred. Made from brass and PTFE, it lasts indefinitely, and proportionality is built in. I do not think that there is need for explanation of construction.

Steam control valves for injectors, blower, ejector (for vacuum brakes), whistles etc, can be purchased at any reasonable plumber's merchants; 1/4in. (6mm) valves are large enough, they can also be used for injector water valves, and brake application valves. Pipe fittings are equally easy to obtain, at the same places, and building up your own pet set of backhead controls is fun. It is not a bad idea to have a larger valve (say 3/8in. or even 1/2in. (10 and 12mm) direct into the boiler, as when boiler testing-time comes round closing this valve can isolate the whole system. Water gauges can be purchased as well; and do not forget a pressure gauge (about 2 to 3in. dia., reading 0-150p.s.i.), and a 0-30 vacuum gauge about the 2in. dia. mark. I do not think that any 'wiring diagrams' are needed, but a few minutes with pencil and paper will sketch out a likely set-up.

For builders who rather think nicely of the alternative *GWRillian* design (name self-explanatory) I shew a set of backhead fittings of GWR style, drawn to a scale of about 1:5, or roughly to suit 10¼in. gauge (*some have been held over to next time due to lack of space-Ed.*). ▶

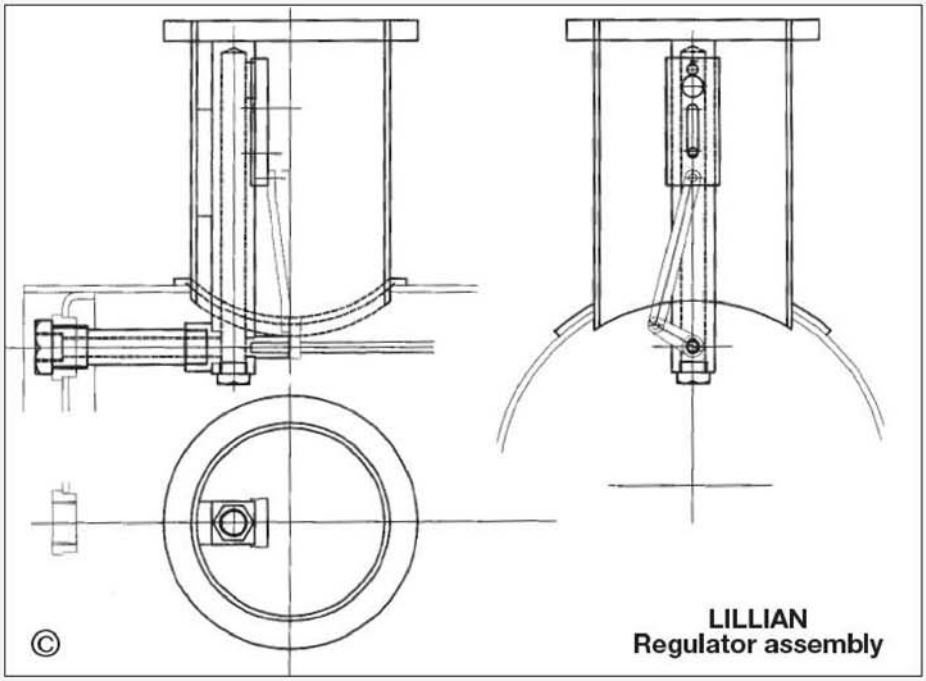

LILLIAN
Regulator assembly

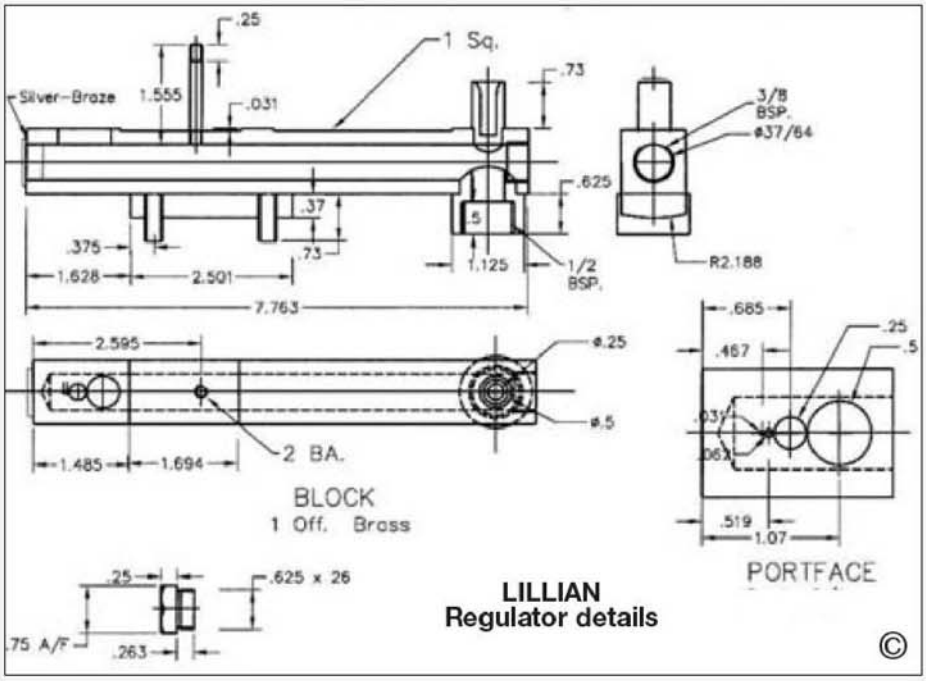

LILLIAN
Regulator details

The recommended form of regulator for **Lillian** *offers proportional opening.*

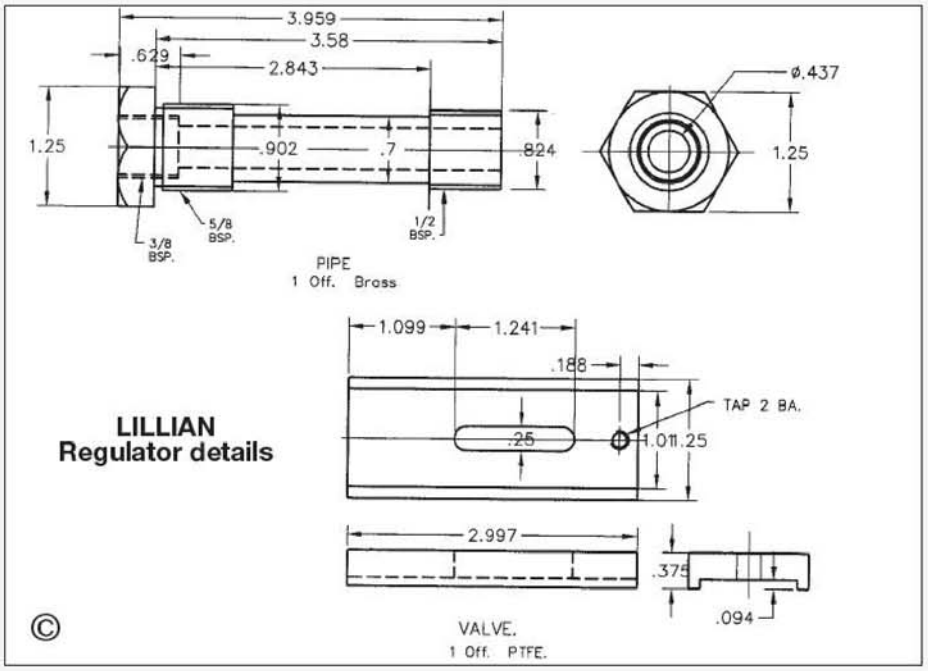

The brake control valve is easier to make than it looks. There were at least three types of application handle, one with 31 holes in the outer ring, then 24, then 20. I presume that they were drilled from a jig, for I have yet to see one with holes in all 3 rings ending up in a radial straight line.

Another style was 24-20-16 holes, and one with (presumably) cast-in tapering slots with rounded ends. Unfortunately I have no photographs of these two latter patterns. It does not take long to set up and drill the set of holes you choose, it is a job for a rotary milling table. Exactly why someone chose 31 holes for the outer ring has yet to be explained, for it is a prime number, therefore tricky to set out. But a few simple calculations will spread light on the matter. Using the average pocket calculator, each increment works out as 11.61290323 degrees. If this be left in the memory and added on each time, the inaccuracy of the prime number evens itself out as a visually perfect set of holes.

Incidentally, *all* prime numbers apart from the first 2 (2 and 3) are of the form 6n±1 (six times n plus or minus one, n being any whole number, or integer). It does not of course follow that all numbers generated by this formula are prime, far from it. But if you want to know if a number is prime or not, much can be learned from applying this test.

I do not think that 'theory of numbers' is yet taught at schools, but it is a fascinating subject. It can be shown that there is a vast, if not infinite, number of numbers greater than infinity (they are called Aleph numbers), and that the system of integers and ratios between any of them are 'everywhere dense', in others words there are no empty spaces or gaps. Yet immediately we find an infinite number of numbers that do not fit into the series,

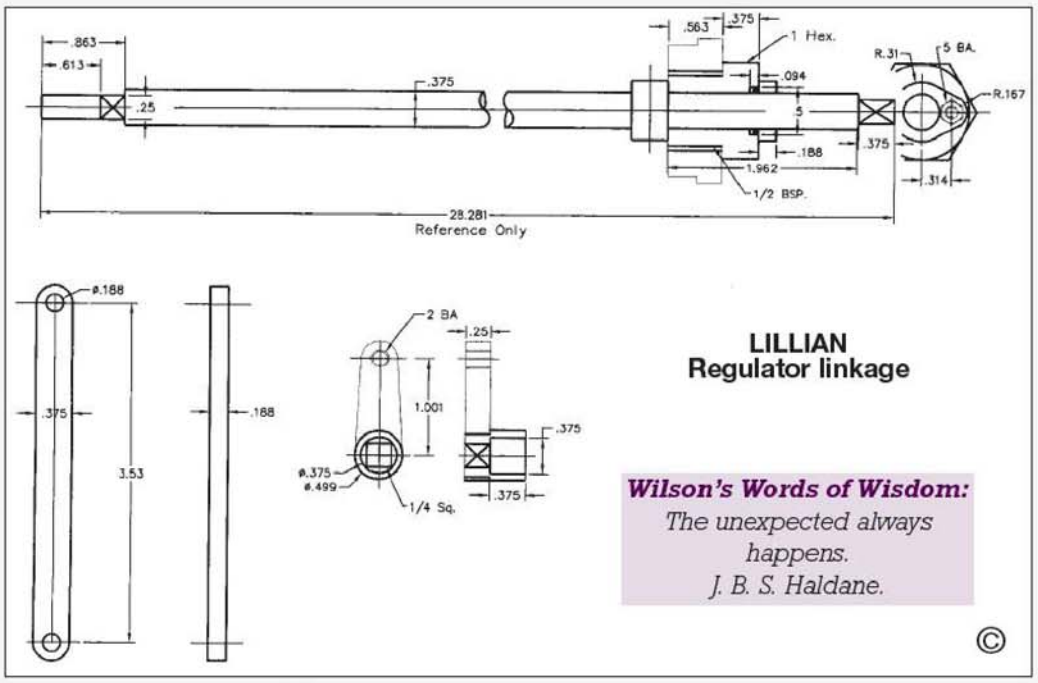

Wilson's Words of Wisdom:
The unexpected always happens.
J. B. S. Haldane.

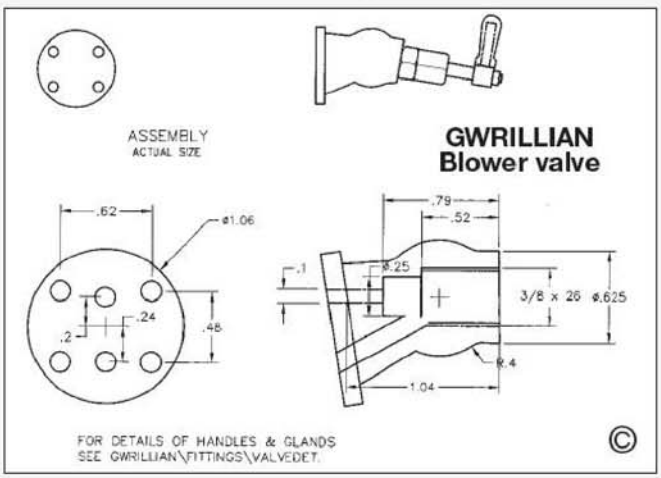

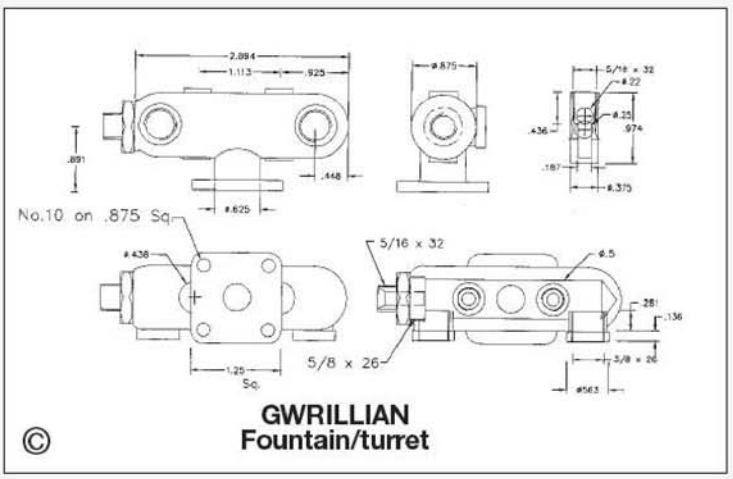

Another view of the regulator showing the PTFE valve and the actuation lever and linkage.

A selection of backhead fittings. Bottom right is the brake control valve with its distinctive rows of holes.

so there are gaps! π is the most obvious, e is another, and note that square roots, cube roots, and many more either work out exactly, or never to a whole number or even a vulgar fraction. These are known as transcendentals. I repeat, 'tis a fascinating subject. Although prime numbers must get fewer as we get larger integers (for of course there are more possible divisors as we get further on in the scale), never do we come to the end of them, also pairs separated by 2 (5-7, 11-13, 17-19, 29-31, 101-103, etc., to name only a few!) go on for ever! There are many other interesting facts, such as the fact that there are just as many positive numbers between 0 and 1 as there are between 1 and infinity. No formula has yet been discovered that will generate only primes; and so on. A fascinating subject indeed!

Returning to the brake control, luckily for me I kept the jig that I made in 1982 for the big 2-8-0s so my work was much lightened. It takes up to 2 hours to make the jig, but then about 3 minutes to drill all the holes!

I find from experience that although bronze or gunmetal is usually recommended for boiler fittings, there is little to be said against brass if of reasonable quality.

The one thing to watch is *never* to use stainless steel in a copper boiler below the water line. Electrolytic action is the problem; it will 'rot' stainless very quickly. Even blowing the boiler dry after every steaming will not cure this, although it extends the rotting-time. So bronze or brass for below-water-line fittings. The blow down cocks are about the only ones, for a backhead clack low down is to be avoided. A high-up backhead feed clack is okay, but extend the actual feed into the front of the urn by a long piece of copper pipe. However, top feed is best, so I shew a fitting suitable for both *Lillian* and *GWRillian*.

The ejector for the vacuum brakes is generally the same as the one on the right-hand side of all the big-boilered Swindon locomotives (except the 28s and 38s). However, the insides, or the actual vacuum-creating cones are the standard size as designed by Bill Hughes and incidentally 'snitched' without acknowledgement by many others. I have tried, so far without success, to get another set of cones inside the same body; these would be 50% larger and fed, as per Swindon locomotive practice, under the control of a separate valve.

It was a regular trick of other railways, if GWR drivers were in charge for some reason, not to mention that other railways used the small ejector instead of the air pump fitted to all 'proper' locomotives, thus the GWR driver would shut off both ejectors once the speed had built up a bit. Of course, the brakes would slowly leak on, confusion for the GWR driver and leg-pulling from the host driver. Nemesis once came to the aid of Swindon however, for once during a very thick fog a GWR locomotive was put on as pilot for another train; running over GWR tracks. To the other driver's absolute nightmare of horror, the GWR driver cracked on at 70 plus, using the ATC control system - perfectly safe. It was suggested in some circles that the other driver had to be helped off his locomotive as a nervous wreck, complete with proverbial snow-white hair! I have often wondered just what his thoughts (and certainly words!) were when he was let into the secret! I think I could make a good guess however, lots of Curly's 'railroad Esperanto!'

These little ejectors can pull up to 22in. vacuum on air test, but do not seem quite so energetic on steam. However, 10in. is plenty for our use, for due to old square-cube our brakes ▶

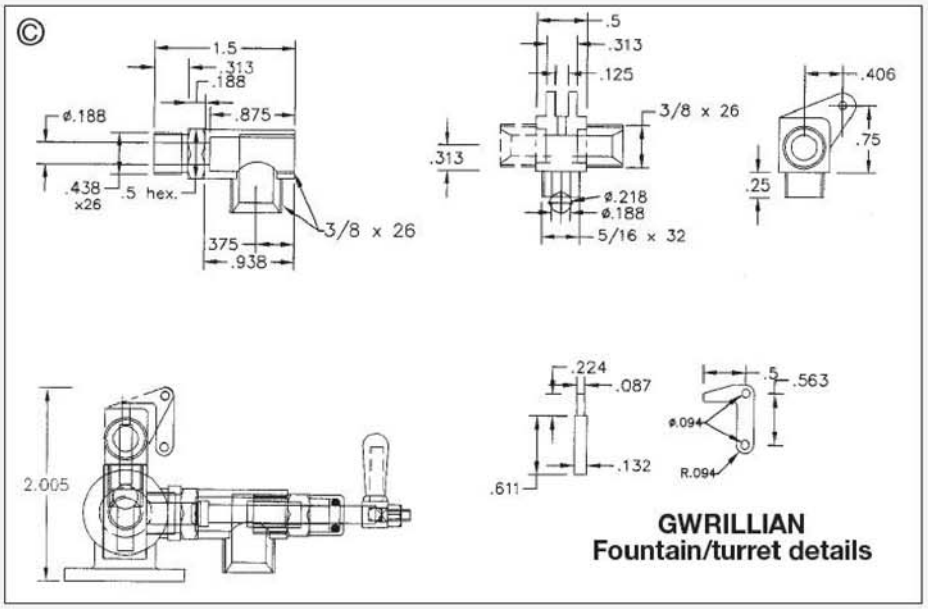

GWRILLIAN
Fountain/turret details

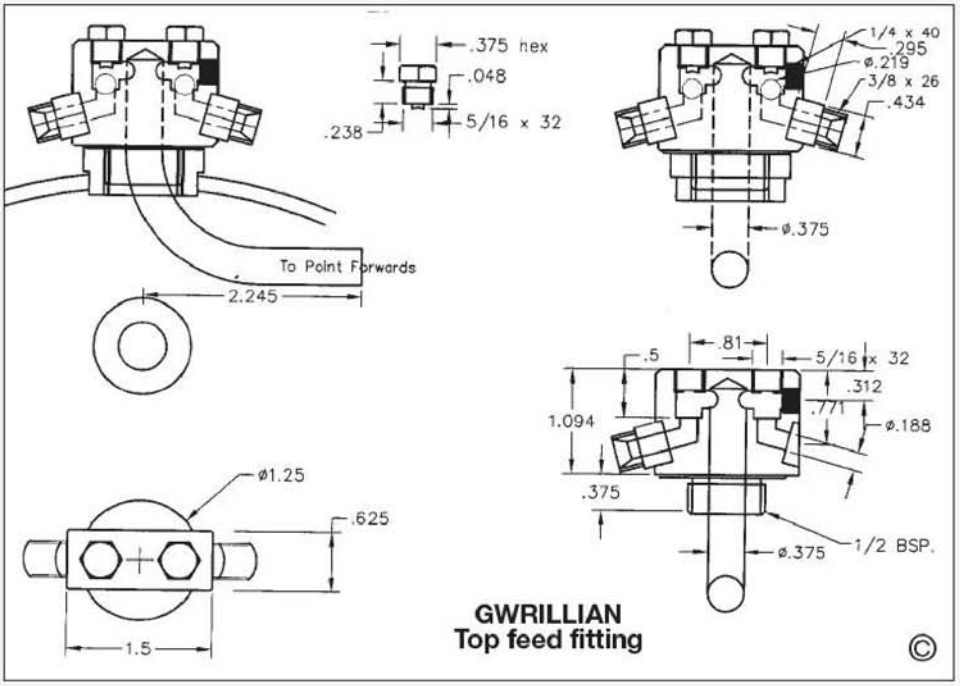

GWRILLIAN
Top feed fitting

are nearly eight times as powerful as full-size, relative to mass of train. (I write 'mass' instead of 'weight', for mass is constant, weight depends on the gravity factor of the planet concerned, and it is mass that is important when considering inertia).

The fountain, or turret, is pure Great Western. It has provision for two whistles, steam for two injectors, and pressure gauge.

I have not troubled with shut-off cocks on the water gauge, but of course you may add such if desired. I have added them in one or two cases, it is doubtful if they were ever needed. I have never had the need of them in boilers of this size or smaller. In the rare case of a glass going, it 'stars' all over, then about one second later, the bits drop off and steam issues from the top, plus high-pressure water, flashing into steam, from the bottom. This flashing into steam absorbs a lot of energy (latent heat again) and the result is quite cool clouds of water vapour, easily containable with a piece of cloth which is normally handy in the cab anyway. In a much larger boiler, things can be a bit different, and shut-off cocks begin to come into their own. Automatic ones are possible, but I fitted them to the big 47xx and regretted it. I had got the design slightly wrong, and immediately the blow down cock was opened they shut off, and took the dickens of a time to re-set, so eventually they were removed.

It can be a valuable adjunct with a big boiler, for such could vomit steam and water for some considerable time. Since the larger fires tend to last longer than ours, there is a very real chance of the boiler being seriously damaged. A very neat water-gauge with shut-off cocks is available in kit form, stocked by our old friends Reeves; it was designed and put into production by Geoff Oughton. I used them on four 'Romulusses' made about 1995. It would seem that 'Romuli' is the theoretically correct plural of Romulus, but I went into the matter when I built these four and it seems that in the case of the locomotive, 'usses' is correct. It rather reminds me of Ted Martin's query many years ago about the correct collective noun for a group of Kings. For the monarchs, the only case I have ever come across is a 'bevy' used by Dornford Yates. For the locomotives, a 'keith' of kings is more correct - modest blush.

For much the same reasons I have never bothered with a fusible plug in the roof of the firebox, and have never had cause to regret its non-existence. There is nothing to stop any using one who wants to.

For those who do not like GWR fittings, the essential parts of the vacuum ejector can be mounted just about anywhere in line from steam valve to smokebox. It is best arranged that the exhaust from the ejector be turned up the 'chimmock'. It is also best if things can be arranged so that the ejector itself is fed from high up in the boiler, for even a water drop can cattle-up the steam cone and lose the vacuum. A non-return valve is not really necessary, as the ejector is normally left operating all the time you are running. Incidentally, with double-heading both ejectors should be in use, but only one driver should be allowed to apply the brakes. In case the reason for this escapes somebody, a double application would almost certainly lock up the wheels, this reducing braking efficiency to a dangerous extent.

Copper pipe of 1/4in. dia. will be needed in quite large quantities, (I have not done any calculations on this, but I would not be surprised unduly at 40ft.) except for the pressure gauge and vacuum gauge, which need not be more than 1/8 inch. The same applies to the blow down from the water gauge, 1/8in. is ample. If the Lillian backheads are built up from standard pipe fittings, amongst other things a couple of four-way fittings will be needed to accommodate the steam control valves, and there seems to be no reason why the pressure gauge should not be mounted on top of this 'tree'.

●*To be continued*

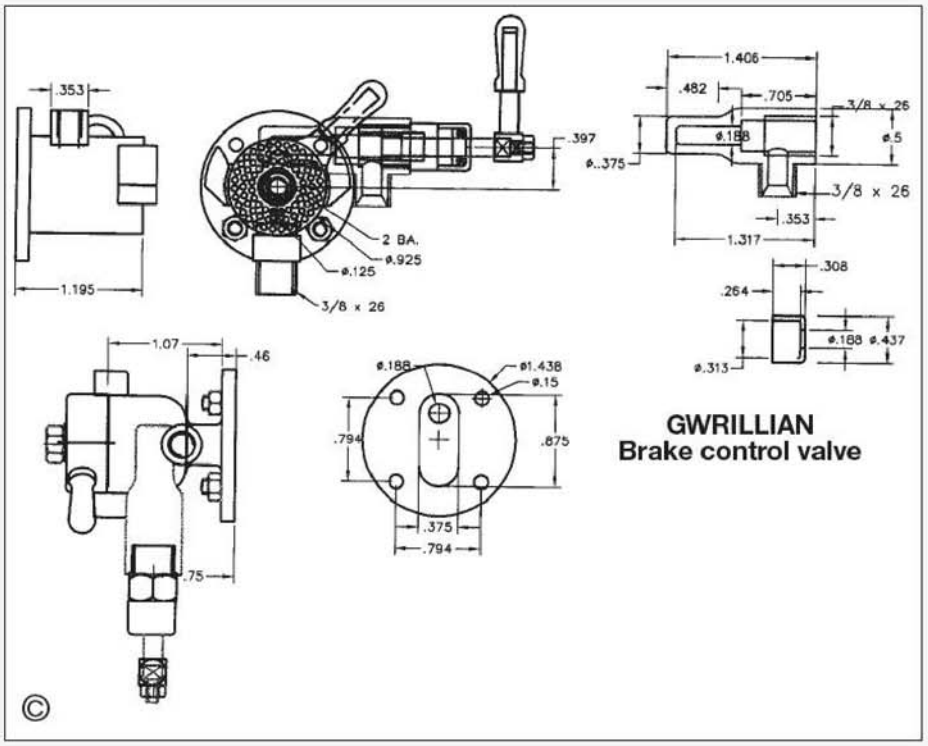

GWRILLIAN
Brake control valve

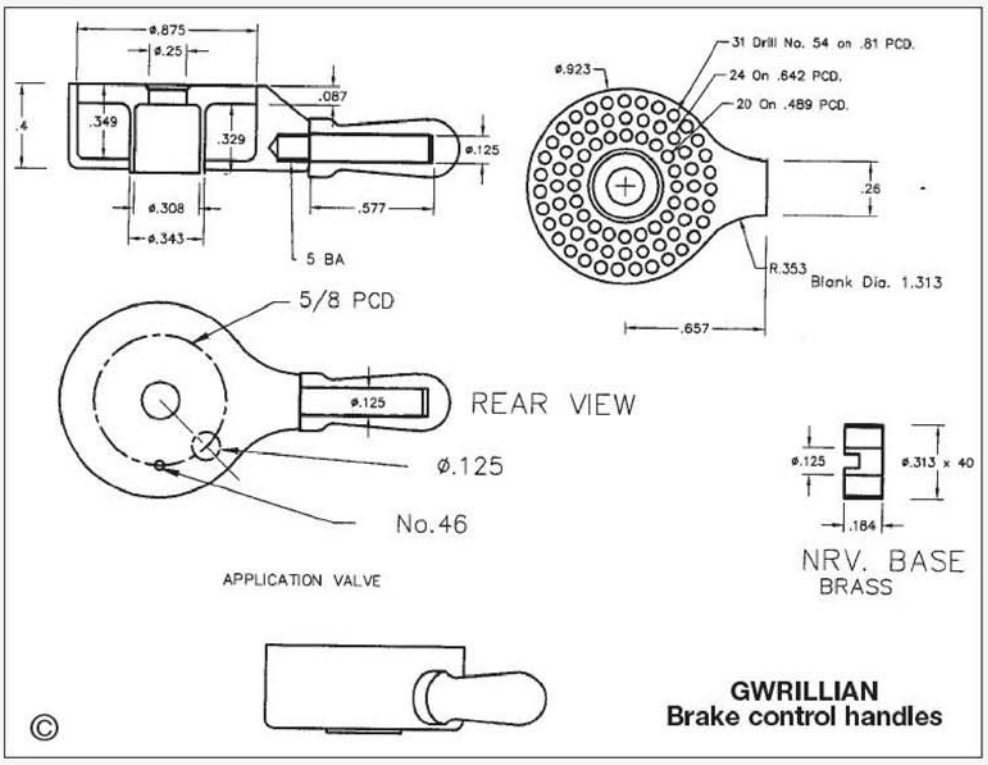

GWRILLIAN
Brake control handles

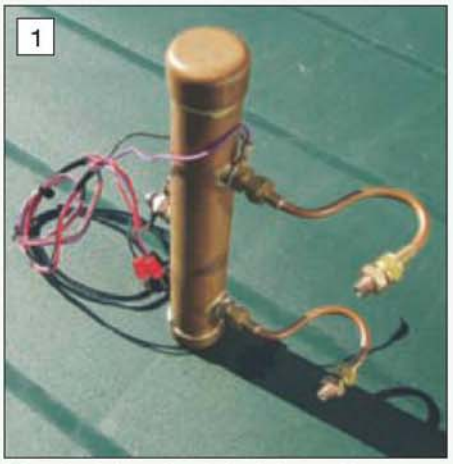

Water level detection device is housed in a copper tube.

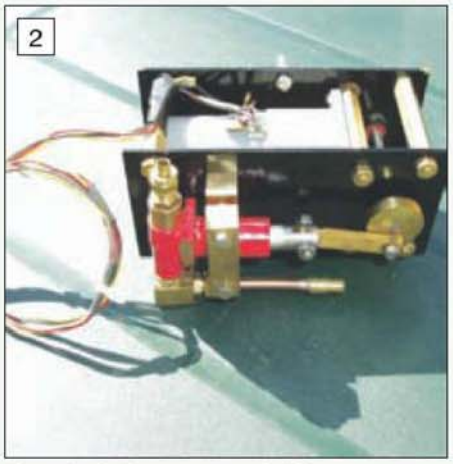

The author's first attempt at building an electrically driven pump.

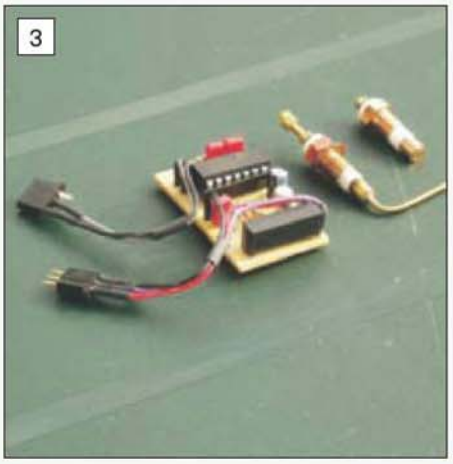

The electronic circuit used with the equipment shown in photo 2 with two electrodes.

ELECTRONIC BOILER CONTROL FOR MODEL BOATS

Tim Greenwood

describes an automatic system developed for his marine boiler.

Having read John Schofield's article on the above subject (ref 1) I would like to put forward some of my thoughts, comments and the results of my experiments in trying to provide total electronic boiler control for model steam driven boats.

In the 1980s I realised that, when sailing my open 50in. long steam launch, keeping an eye on the boiler water level was easy. Just sail slowly by and look at the gauge glass! If the water level needed raising then the boat was brought alongside the bank and the by-pass valve was closed on the engine driven, water feed pump. I then waited until the water level was satisfactory. I was always amazed by the shock on the Stuart D10 as the by-pass valve was closed and the struggle the engine had driving the feed pump. Probably a small marine engine has no momentum when compared with a locomotive using an axle driven pump. Incidentally a fellow club member can over-ride his boat's by-pass valve by radio control when doing tricky manoeuvres to take the added load off the engine should the by-pass valve be closed.

Then an incident occurred where a shock on the propeller caused the propeller lock nut to come loose and drive up the prop-shaft and lock it solid. This resulted in a stalled engine and no feed pump. A risk assessment showed me that a single-engined boat needed an independent form of feed pump drive. I built a water level detector using the now obsolete LM1830 water level detector integrated circuit chip and decided to go up the electrically driven feed pump road.

I did consider the use of an injector as John Schofield has done but went for the electrical solution. Perhaps it was because I am an electrical engineer by profession. Electrodes placed in a copper tube column connected to the water gauge by T-pieces (**photo 1**) detected the water level. The electrode can be seen to the left hand side in the middle of the copper tube, one can see the white insulator of the centre electrode.

I constructed an electrically driven water pump using a 5/16in. bore x 3/4in. stroke, commercial, axle driven water pump driven by a Radio Spares 6V, 60rpm geared motor (code 336-337). **Photo 2** shows the pump with the motor gearbox fitted between the brass frames. The drive is via two 1:1 bevel gears from Bonds. Testing it on my steam launch showed it would deliver water against a pressure of 60psi with a motor current of 320mA at 6V.

The water level detector used two electrodes to a design by C.T. Amsbury (ref 2), at high and low water levels, the pump being started at low water level and shut down at the high level. There are no time delays as in the Cheddar ABC unit.

After the successful trials I removed the pump and electronics as it looked rather incongruous on an open steam launch of a long gone era. The basic design of electrode is pictured in **photo 3**. Also shown is a modified version with a bent electrode, its use to be described later.

I have just finished a 1:12 scale model of a steam picket boat (**photos 4** and **5**) and am using an ABC boiler control which starts and stops a Stour Valley Steam (SVS) electric feed pump (**photo 6**). This latter unit has a pump of 8mm bore x 8mm stroke driven by a heavy duty Futaba servo (electronics by-passed). It runs at 40 strokes/ minute against 70psi with a motor current of approximately 400mA at 6V. Its capacity was quoted in SVS literature as 900cc per hour against a pressure of 3 bar. Since initially writing this document I understand the manufacture of this pump has been discontinued.

The current was difficult to measure as the pump is slow running and oscillates depending on which part of the stroke the ram is on. As I only commissioned it this year operational experience is limited. The amount of cold water entering does not seem to effect the boiler pressure too much.

I was impressed with John Schofield's injector monitoring, my only alarm is water tank low with consequent lockout of the water pump. I have thought of using a contact on the pump run

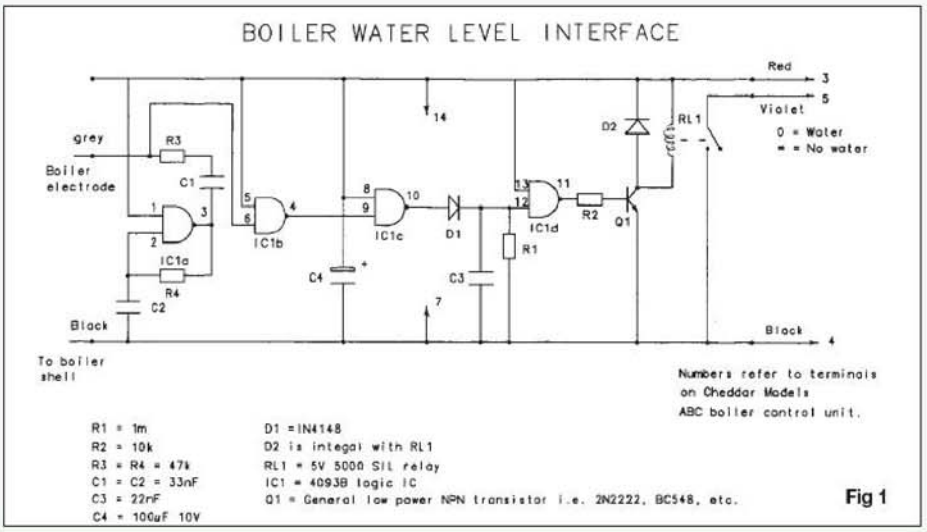

Fig 1

Author's latest project is this steam driven picket boat here seen under-way and at speed.

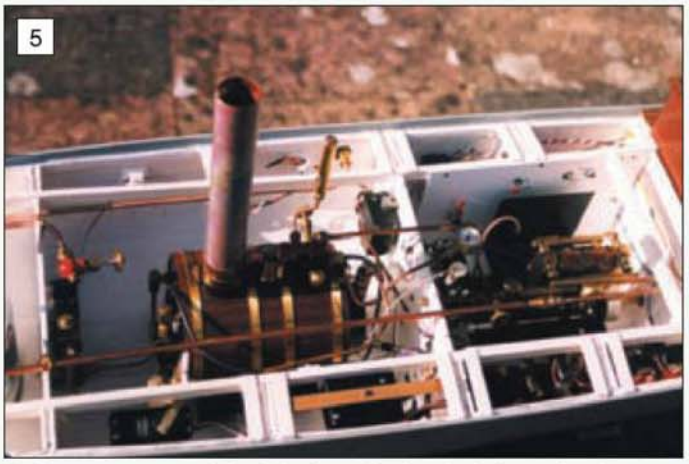

Engine compartment of the picket boat showing the boiler and engine mounting arrangements.

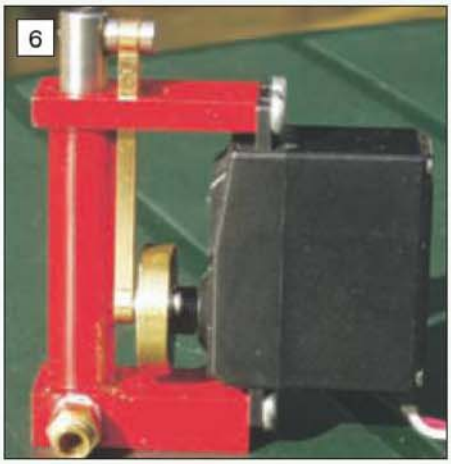

The Stour Valley Steam electric feed pump has an 8mm bore and stroke.

micro-switch to start a timer and if the contact is still closed after a set time (setting yet to be determined) then an alarm would be raised.

I am very interested in the vapourising burner system. I have shied away from purpose built gas tanks because of the attendant testing. I have standardised on Coleman 440 gram 30/70% propane/ butane canisters. In my latest boat I have attempted to negate the cooling effects of the gas by having the canister in a separate compartment with the oil separator. The downside of this move is that there is a lot of condensate in the separator tank and after about an hour oil starts to overflow onto the lake surface. This is at present the limiting factor to sailing time.

I am sure there must be self-lubricating materials to use in piston manufacture which would eliminate the requirement for cylinder/ piston/ valve lubrication. With no oil being added to the steam line, oil separators could be eliminated!

I share John Schofield's concern over the Cheddar Models water level detector in relation to bubbles, etc. I am still happier with electrodes in the boiler or, if not possible, a separate water column made of copper tube with electrodes screwed in; the whole unit being in parallel with the water gauge. I have built an interface using a CD4093 chip as a substitute for the LM1830. The circuit was published in Electronics World (ref 3) some time ago and I have modified it to give a reed relay output (**fig 1**). The latter is used to ensure that the input to the ABC unit is electrically isolated, as I do not know what its input arrangement is. This circuit is used to apply zero volts to terminal 5 of the ABC control box the action is as in their instructions (ref 4) page 7, item 8, open circuit = empty glass, closed circuit = full glass.

The unit will detect Halfords de-mineralised water, if not add a little tap water to make it more conductive. The subject of what is chemically the best water to use in a copper boiler is another story! The physical arrangement of the interface unit for the ABC is shown in photo 3.

It has been built on a purpose built PCB and has a 3-pin polarised plug (Maplin code FK99H and socket FG98G) This plug is so arranged that the ABC unit feeds power to the interface and receives a signal from it. The connection to the electrode and boiler shell is via the other socket shown. With my latest boat I am able to change over from the Cheddar photo L.E.D. system to using the above interface.

Since sending my original letter to the Editor and John Schofield I have carried out some further experiments concerning the positioning of electrodes in the boiler. Because the bushes fitted to the Cheddar Models boiler are either too low or too high to use with a plain electrode one with an extension bent through 90deg. has been developed. **Photo 7** shows it installed through the top bush of the boiler backhead. The connection of the 0 Volt rail is via a plug tapped 8BA to receive a screw terminal and screwed into a spare bush. It can be seen to the left of the furnace tube.

The top electrode has a number of nuts, a pair locked for rotating the electrode and a nut with flat and spring washers for holding the electrode in position. It should be noted that as the insulation for the centre electrode is PTFE the centre electrode is always rotatable but will not leak under pressure. In fact over tightening the nut only serves to spread the PTFE and make removal of the electrode difficult. Obviously another nut will be required to clamp a wire or solder tag for the electrical connection.

The design of the centre electrode is such that the bend is deep enough to be fed through the boiler bush and the vertical straight portion is long enough to just foul with the boiler furnace tube. The procedure for fitting is as follows, ensure the two forward nuts are locked together and the back nut is slackened enough for the electrode to be rotated but not slack enough for the bent part to fall under its own weight.

Introduce the bent section through the bush and then screw the main body into the bush. A copper sealing washer is useful here. Tighten down the body and if all is correct then the electrode can be rotated in an arc bounded by the furnace tube on the right and the stay on the left. Turn the centre electrode until you estimate that

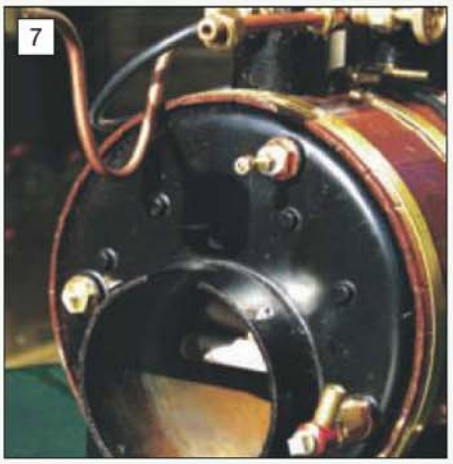

Picket boat boiler showing the electrical terminals referred to in the text.

the electrode is a few millimetres above the furnace tube and tighten the back nut. This is only approximate as the final fine tuning can be done with the boiler in steam and the electronics in operation. It is best not to slacken off the back nut for these adjustments as the centre electrode can easily be turned for reasons explained earlier. Do not forget the pumping time delay in the ABC unit, it is probably best set to a minimum (15s).

Obviously the final verification of the pump start and stop levels is the boiler water gauge. I have tested this system on the bench and get consistent pumping times. As can be seen from the above I have been experimenting with electronic water level detection and control for some years and offer these ideas as a basis for others to experiment with. Next years sailing season will be used to thoroughly test the current system on the water, after all 'the proof of the pudding is in the eating'.

References

1. *Electronic Boiler Control for a Model Boat* by John Schofield, *M.E.* 4224, 25 June 2004.
2. *Electronic Water Gauges* by C.T. Amsbury, *M.E.* 3494, 2 August 1974.
3. *Electronics World*, circuit ideas headed *Economical Liquid Level Sensor needs just 7 micro amps*, September 2000 by David Tayler.
4. Cheddar Models Ltd A.B.C. Mk2A *Automatic Boiler Control Instructions Part No 60070.*

CLUB PROFILE

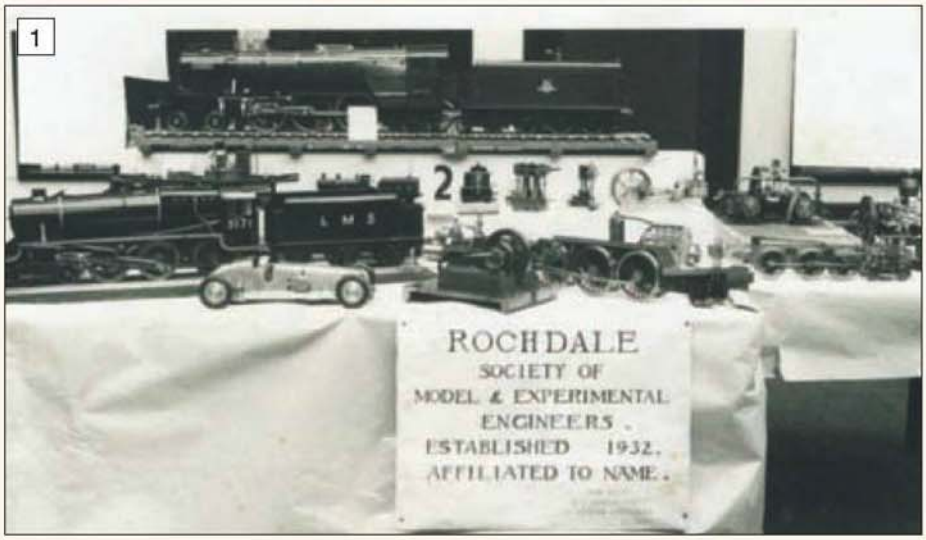

An old photo showing some of the work of early members of the Society.

Thriving membership includes juniors for Rochdale SMEE

The Rochdale Society was formed in 1932 and from small beginnings the membership grew until by 1945 with 25 members it was one of the founding members of the Northern Association of Model Engineers (**photo 1**). The Society wanted a 'home' to hold meetings and build a track, and in 1959 work was started on building a 215m oval track at Springfield Park, Rochdale. A year later, the raised track was completed, allowing for 2.5in., 3.5in. and 5in. gauges. A wooden hut was also built which has developed over the years into the present structure and is the base for all club activities (**photo 2**).

By 1990, the track had undergone significant changes; losing the 2.5in., but gaining a 7.25in. rail. Members were now itching to test their larger locomotives over a longer and more varied and demanding route; and so work was started which would see the track extended to nearly three times the original length by running an elongated loop alongside the existing golf course.

Members now have the option of running either the 'small' or 'big' track by operation of two traversers (**photo 3**).

As, unfortunately, other societies in the locality dwindled and folded, the Rochdale Society continued to thrive with membership a fairly constant 90 members, with perhaps a third 'regulars'.

More history - members outside the club hut.

Evening meetings are held twice a month with the usual mix of general meetings interspersed with speakers, bits and pieces, auction, video, quiz nights etc.

We also run every Sunday afternoon from Easter to late October and Wednesday afternoon is reserved for the 'coffin dodgers' who generally put the world to rights over tea and home made cake (**photo 4**).

A surprising new development is Junior Members! This has been an unexpected and welcome development. For years older members cast doubts on the long term viability of our wonderful hobby for a variety of reasons, not least of which is the lack of practical metal work teaching in schools. We were pleased, therefore, to have a junior member wanting to join the ranks some three years ago, after spending most of his Sunday afternoons riding on the trains during the public sessions. Within no time we had about six regular juniors.

Another shock to the system was to find that despite Rochdale not being particularly noted for its affluence, money for these youngsters does not seem to be in short supply, and four have already purchased their own locomotives; and indeed have them running at the track. What happens when they break down is a problem yet to be faced, and despite it all seeming back to front in comparison with the experience of most of the older members; this is the way that the world is changing; and the important thing is that the spark of interest has been struck. As we all know, once steam gets in your blood, it's an addiction that never leaves and I have no doubt that long after these juniors leave; we will see them again; older, wiser and perhaps more interested in actually making rather than just running their engines.

Well that's about it, if anyone would like to visit us on a Sunday afternoon you can be assured of a warm welcome and if you want to join us, doubly welcome.

Contact the secretary Mike Foster on 01706-360849, e-mail: **fosterm@btinternet.com**

General view of the club house and track.

Members share a joke in the steaming bay.

LOCOMOTIVE LINKS FOR STEPHENSON'S VALVE GEAR

Don Ashton
gives the definitive guide to the most common valve gear.

Stephenson's valve gear using locomotive links was the most common valve gear employed in locomotive building from the earliest days in this country until well into the last century, yet its design appears to be lamentably misunderstood in model engineering circles and indeed more often than should be the case in full size. In fact I have seen several published designs that show little idea of the principles involved.

Like any other valve gear it consists of a geometric linkage that is required to conform to the parameters laid down during the design of the ports and valve. Many drawings exhibit scant regard for this essential principle.

Equivalent Eccentric

Any gear, irrespective of choice, should follow what is termed the equivalent eccentric. This is illustrated by constructing a simple eccentric from the valve and port parameters and Fig. 1 shows a valve and its eccentric, proportioned to conform to the valve dimensions given. The eccentric directly drives the valve and full forward gear will result. In order to reverse it would require the eccentric moving vertically across the centreline such that the valve remained in the same position.

The setting of the eccentric in **Fig. 1** is the equivalent eccentric and any gear we choose – Bremme, Hackworth, Walschaerts or even a valve gear that uses neither eccentrics nor return cranks must be able to mimic this equivalent eccentric exactly.

When it is correct practice to apply Launch links to Stephenson's gear and the eccentric rod pins align with the gear/valve centreline for full gear, then the *actual eccentric* mirrors exactly the *equivalent eccentric* both dimensionally and in setting. See **Fig. 2**. This is correct for common early American practice where the gear drives via a 180° rocker to outside admission valves, or directly to inside admission valves. The wrong choice of link causes all the inherent angularity errors to accumulate on one side of the equation and considerable link slip with consequent wear is then necessary to equalise valve events.

Over the period of years in discussion the bulk of British locomotives employed direct drive to outside admission slide valves operating between and on the same plane as the cylinder bores, hence the choice of Locomotive links. Eccentrics able to mimic the equivalent eccentric are therefore required, as dictated by the valve and port parameters.

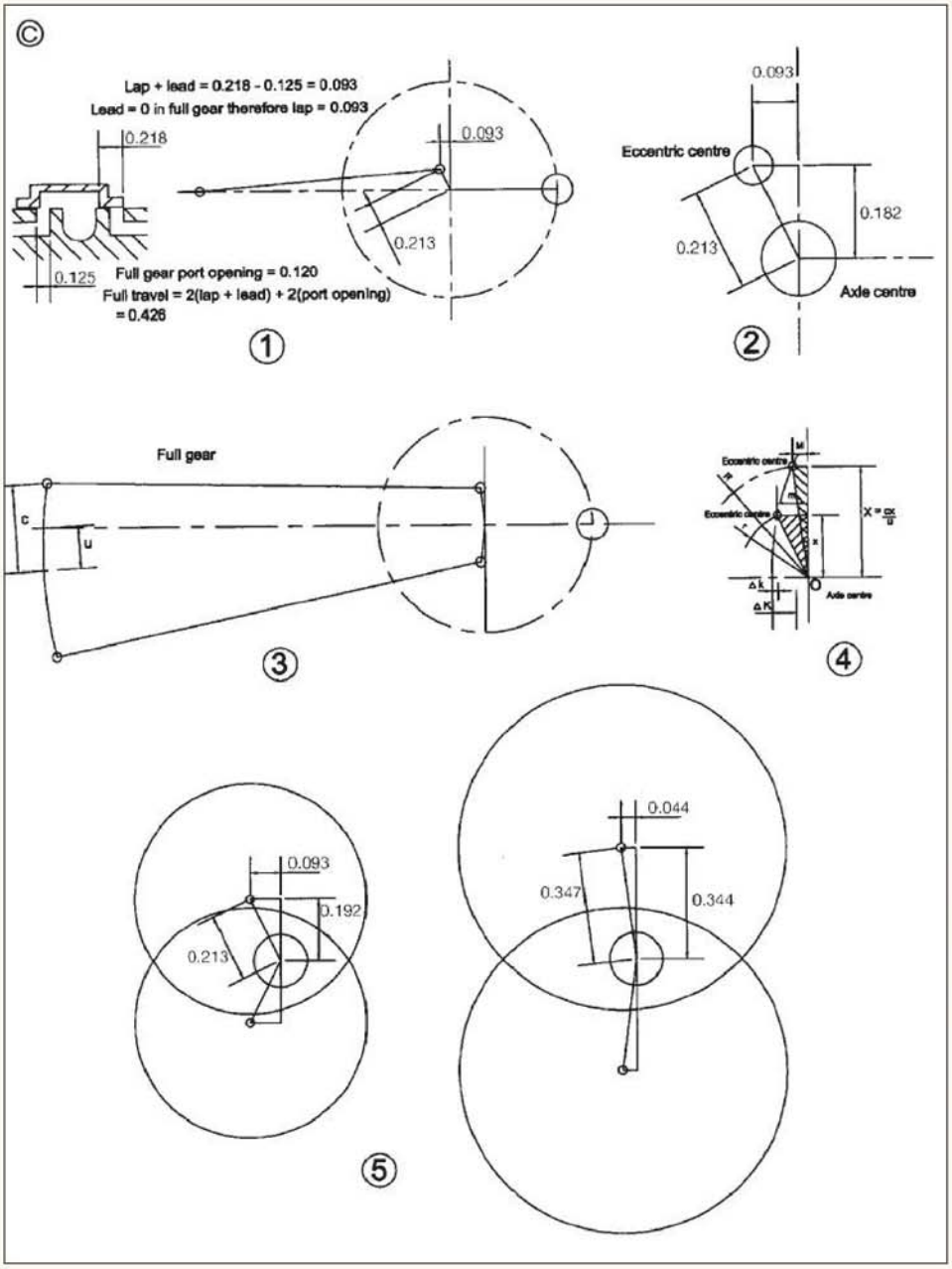

Locomotive link eccentrics

Clearly the locomotive link requires an eccentric of greater throw because the expansion link effectively forms a proportional leverage of ratio **c** to **u** in its full gear attitude, unlike the launch link arrangement where **c** = **u**. **Fig. 3** shows why this is the case.

What appears to be commonly misunderstood is just how we make the new eccentric conform to its equivalent eccentric. This it must do exactly, otherwise the valve will not receive the correct messages! **Fig. 4** is my attempt to reveal the mystery. The equivalent eccentric (and hence that employed for launch links) has been drawn with a locomotive link eccentric superimposed to show the correct relationships.

All lower case elements refer to the equivalent eccentric and upper case to the eccentric for a locomotive link that will produce exactly the same effects. In view of what I have said about launch link eccentrics one could also view this diagram as having a locomotive link superimposed on a launch link eccentric. The essential principle is that their *equivalent eccentrics* are one and the same.

Two components at 90° to each other form a gear; the lap and lead amounting to **m** is supplemented by the 90° component **x**. **Δk** is the increase in lead occurring when moving from full gear to mid gear, calculated simply by dividing **cx** by **l**, the length of the eccentric rod. Macfarlane-Gray's construction produced this very accurate formula and is referred to in most textbooks on the subject. The throw of the eccentric is **r**.

The locomotive link eccentric that will produce the same results is calculated as follows. The 90° or quadrature component of this eccentric, **X**, is proportional to **x** in the equivalent eccentric exactly as the link's **c** is proportional to **u** in full gear. For mechanical reasons, to prevent the dieblock hitting the end of the slot when working in full gear, the ratio of **c** to **u** needs to be 1.8 or greater. Approaching a ratio of 2, that is where **c** = **2u**, the designer may need to avoid hitting the underside of the boiler in full reverse gear.

If a proportion of 9:5 (ratio 1.8) is suitable for a design whose **x** is 0.192, then the locomotive link eccentric's **X** must = **cx/u**, or 0.344. **M**, or the advance of the eccentric, clearly needs to be much less than the equivalent **m** and this is commonly misrepresented on drawings for miniature engines. **Fig. 4** shows that if it were possible to drop the eccentric rod pin all the way to the gear centreline the lead increase from there to mid gear would amount to a massive ΔK. We only require the correct fraction of this, so $\mathbf{M} = \mathbf{m} + \Delta\mathbf{k} - \Delta\mathbf{K}$. The correct eccentric throw **R** is then simply the square root of $\mathbf{M}^2 + \mathbf{X}^2$. **Fig. 5** shows an eccentric pair for launch links, with a locomotive link pair able to mimic the same equivalent eccentric to the right. A launch link for the former would have pin centres of 0.902, whereas the locomotive link's pin centres should be 1.623. This may all look complex to the uninitiated, but my computer can eat several designs for breakfast these days. Robert Stephenson's men might have taken a little longer but at least they understood the principles.

I have observed unfortunate model engineers who, having spent many hours hacking metal and looking forward to setting for the first test run on air, reach the consternation stage when the valve movement does not appear to relate to the steam chest. A partial strip down and fiddle with grub screws, surely the world's worst way of fitting eccentrics, then quickly leads on to the frustration stage! Only a redesign and remake will put this to rights.

The equivalent eccentric used as the datum for design is that for full gear so that the actual eccentric may conform to specification. It is obviously possible to construct an equivalent eccentric for any state of cut off until at mid gear (refer to Fig. 4), having reduced the 90° component to zero, we simply have a straight horizontal line from O of length $\mathbf{m} + \Delta\mathbf{k}$, hence the valve travel then is the lap plus lead plus the increase in lead, times 2.

Rarely have I seen illustrated methods of eccentric setting. From the above it should be clear that only one position is correct, and if left adjustable one of Keith Wilson's favourite laws dictates the likelihood of an incorrect setting. A simple jig fixing each pair of eccentrics together *before putting on the axle* at an advance of **m** for launch links or **M** for locomotive links (forget the angle!) will suffice and if the main crank web happens to be conveniently alongside then fix the pair immovably to this.

Readers seeking more information may find some difficulty in locating accurate sources. I have wasted many hours wading through British textbooks, and apart from my own book on the subject (available from Camden Miniature Services and especially written for model engineers) I can only recommend the following long out of print tomes. *The Practical Application of the Slide Valve and Link Motion* by W.S.Auchincloss and *Treatise on Valve Gears* by Dr. Gustav Zeuner.

CLUB DIARY

A minimum of 6 weeks notice is required for diary entries. Clubs and Societies are asked to include a telephone number for the assistance of would-be visitors.

NOVEMBER

25 **Chichester DSME.** *Club Auction.* Contact Brian Bird: 01243-536468.
25 **Malden DSME.** *Rummage Sale.* Contact John Mottram: 01483-473786.
26 **Hornsby ME.** *Family Day & Boiler Inspection.* Contact Ted Gray: 9484-7583.
27 **MELSA.** *Sunday in the Park.* Contact Graham Chadbone: 07-4121-4341.
27 **York City & DSME.** *Running Day.* Contact Pat Martindale: 01262-676291.
28 **Bedford MES.** *Discussion on lubricating work-pieces while cutting.* Contact Ted Jolliffe: 01234- 327791.
28 **Hornsby ME.** *Meeting.* Contact Ted Gray: 9484-7583.
30 **Andover DMES.** *Peter Donovan: Traction Engines.* Contact John Berry: 01960-882616.

DECEMBER

1 **Cardiff MES.** *Club Chat.* Contact Trevor Jenkins: 029-2075-5568.
1 **South Lakeland MES.** *AGM.* Contact Adrian Dixon: 01229-869915.
2 **Brighton & Hove SMLE.** *AGM.* Contact Mick Funnell: 01323-892042.
2 **Canvey R&MEC.** *AGM.* Contact Brian Baker: 01702-512752.
2 **Chichester DSME.** *Christmas Dinner.* Contact Brian Bird: 01243-536468.
2 **Maidstone MES (UK).** *Bits & Pieces.* Contact Martin Parham: 01622-630298.
2 **North London SME.** *Anecdotes and Reminiscences with Seasonal Refreshments.* Contact David Harris: 01707-326518.
2 **North Norfolk MEC.** *Club Dinner.* Contact Gordon Ford: 01263-512350.
2 **Portsmouth MES.** *Any Questions.* Contact John Warren: 023-9259-5354.
2 **Rochdale SMEE.** *Work in Progress.* Contact Mike Foster: 01706-360849.
2 **Romford MEC.** *Competition Night & Millennium & Rusty Titford Cup.* Contact Colin Hunt: 01708-709302.
3 **Bradford MES.** *BMES Annual Competition.* Contact John Mills: 01943-467844.
3 **Dublin SMEE Ltd.** *Gauge 1 Topics.* Contact Colm de Br'n: (01) 868 2549.
3/4 **Furness MRC.** *Warley National Model Railway Exhibitio.* Contact Fred Firth: 01229-821192 or Colin Burns 01229 837079.
3 **New Jersey Live Steamers, Inc.** *Work Day.* Contact Karl Pickles: 718-494-7263.
3 **York City & DSME.** *Bits & Pieces.* Contact Pat Martindale: 01262-676291.
4 **Canvey R&MEC.** *Santa Specials.* Contact Brian Baker: 01702-512752.
4 **Cardiff MES.** *Santa Special Day.* Contact Trevor Jenkins: 029-2075-5568.
4 **Pinewood MRS.** *Santa Special.* Contact Ivan Hurst: 01252-510340.
4 **Reading SME.** *Public Running.* Contact Brian Joslyn: 01491-873393.
4 **South Durham SME.** *Running Day.* Contact B. Owens: 01325-721503.
5 **Peterborough SME.** *Bits & Pieces.* Contact Tony Meek: 01778-345142.
6 **Oxford (City of) SME.** *Bits & Pieces.* Contact Chris Kelland: 01235-770836.
6 **South Durham SME.** *Meeting.* Contact B. Owens: 01325-721503.
6 **Stamford MES.** *Ernie Tyers: Foundry Work.* Contact Derek Brown: 01780-753162.
6 **Taunton ME.** *Guess what it is?* Contact Don Martin: 01460-63162.
6 **West Wiltshire SME.** *Bring & Buy Sale.* Contact R. Nev. Boulton: 01380-828101.
7 **Guildford MES.** *White Elephant Sale.* Contact Dave Longhurst: 01428-605424.
7 **Leeds SMEE.** *Christmas Dinner.* Contact Colin Abrey: 01132-649630.
7 **Staines SME.** *Christmas Party.* Contact Stan Bishop: 01784-241891.
8 **Cardiff MES.** *Carl Pickstone: More Engineering Topics 3.* Contact Trevor Jenkins: 029-2075-5568.
8 **Fylde SME.** *Christmas Lunch.* Contact Alan Reid: 01253-882872.
8 **Hull DSME.** *Annual Christmas Social at Tony Finn's.* Contact Tony Finn: 01482-898434.
8 **Leyland SME.** *Project Night.* Contact A. P. Bibby: 01254-812049.
8 **N. W. Leicester SME.** *Chit Chat & Pints.* Contact John Elliott: 01455-847040.
8 **Sutton MEC.** *John Miriam: Memories of working in the Aviation Industry.* Contact Bob Wood: 0208-641-6258.
8 **Worthing DSME.** *Christmas Social.* Contact Bob Phillips: 01903-243018.
10 **Erewash Valley MES.** *Santa Special.* Contact Jim Matthews: 01332-705259.
10 **Furness MRC.** *Pennine Exhibition.* Contact Colin Burns: 01229 837079.
10/11 **Furness MRC.** *Wigan Exhibition.* Contact Colin Burns: 01229 837079.
10 **Glasgow & S.W. Rly Ass'n.** *Tom Macfarlane: Road Transport in the G&SW area.* Contact Bruce Steven: 0141-810-3871.
10 **Hornsby ME.** *Christmas Party.* Contact Ted Gray: 9484-7583.
10/11 **Reading SME.** *Santa Specials.* Contact Brian Joslyn: 01491-873393.
10 **Sutton MEC.** *Christmas Party.* Contact Bob Wood: 0208-641-6258.
10 **Westland & Yeovil DMES.** *Running Day.* Contact Gerald Martyn: 01935-434126.
11 **Canvey R&MEC.** *Santa Specials.* Contact Brian Baker: 01702-512752.
11 **Chichester DSME.** *Santa's Steam on Sunday.* Contact Brian Bird: 01243-536468.
11 **Frimley & Ascot LC.** *Santa Run.* Contact Bob Dowman: 01252-835042.
11 **Furness MRC.** *North Turton O gauge test track in operation.* Contact Colin Burns: 01229 837079.
11 **Hornsby ME.** *Running Day.* Contact Ted Gray: 9484-7583.
11 **N. W. Leicester SME.** *Santa Specials.* Contact John Elliott: 01455-847040.
11 **Pinewood MRS.** *Santa Special.* Contact Ivan Hurst: 01252-510340.
11 **Sutton MEC.** *Track Day.* Contact Bob Wood: 0208-641-6258.
12 **Bedford MES.** *Christmas Quiz.* Contact Ted Jolliffe: 01234-327791.
12 **Melton Mowbray DMES.** *Andy Clark: Polly Model Engineering Ltd.* Contact Phil Tansley: 0116-2673646.
12 **Saffron Walden DSME.** *Club Christmas Dinner.* Contact Jack Setterfield: 01843-596822.
13 **Crawley ME.** *Fish & Chip Supper.* Contact Allan Sinclair: 01293-888203.
14 **Andover DMES.** *Christmas Party.* Contact John Berry: 01960-882616.
14 **Harrow & Wembley SME.** *Slide Presentation.* Contact Dr. Roger Greenwood: 020-8427-2755.
14 **High Wycombe MEC.** *Chinor and Princes Risborough Railway.* Contact Eric Stevens: 01494-438761.
14 **St. Albans DMES.** *Christmas Social Evening.* Contact Roy Verden: 01923-220590.
15 **Cardiff MES.** *Quiz Night.* Contact Trevor Jenkins: 029-2075-5568.
15 **Rugby MES.** *Christmas Party.* Contact David Eadon: 01788-576956.
15 **Sutton MEC.** *Quiz and Mincepie Night.* Contact Bob Wood: 0208-641-6258.
16 **Brighton & Hove SMLE.** *Seasonal Social Evening.* Contact Mick Funnell: 01323-892042.
16 **Canvey R&MEC.** *Christmas Party.* Contact Brian Baker: 01702-512752.
16 **North London SME.** *Robert Candish: RHDR.* Contact David Harris: 01707-326518.
16 **Rochdale SMEE.** *Dave Kinsella: Restoring an Aspinall Peacock 4-4-0.* Contact Mike Foster: 01706-360849.
16 **Romford MEC.** *Bring & Buy Sale.* Contact Colin Hunt: 01708-709302.
17 **Guildford MES.** *Christmas American Supper.* Contact Dave Longhurst: 01428-605424.
17 **York City & DSME.** *AGM.* Contact Pat Martindale: 01262-676291.
18 **Harlington LS.** *Mince Pie Run.* Contact Peter Tarrant: 01895-851168.
18 **Leicester SME.** *Santa Specials.* Contact Raymond Wallis: 0116-285-8824.
18 **York City & DSME.** *Running Day.* Contact Pat Martindale: 01262-676291.
19 **Hornsby ME.** *Christmas Social.* Contact Ted Gray: 9484-7583.
19 **Peterborough SME.** *Party Night.* Contact Tony Meek: 01778-345142.

THE MODEL ENGINEER EXHIBITION

Please return completed form to:
Model Engineer Competition, The Leys,
Church St., Twyford, Bucks. MK18 4EU

ENTRY NO.

OFFICE USE ONLY

CLASS	ENTRY NO.

ENTRY FORM - COMPETITION & LOAN MODELS

PERSONAL DETAILS (Please print)

Surname ..... Forename(s) ..... Age .....

Address .....

.....

.....

Post Code ..... Home Tel: ..... Daytime Tel: .....

Model Club or Association .....

Have you entered before? (Y/N) .....

Do you purchase or subscribe to a Highbury House Communications plc magazine? (Y/N) .....

How many years have you been a modeller? .....

Mail Order Protection - please tick this box if you would prefer not to receive mail from other companies which may be of interest to you ☐

MODEL DETAILS - PLEASE TICK BOX IF MODEL IS FOR LOAN ☐

Entry Class (competition entries only) .....

Model Title (to be used for catalogue and display card) .....

.....

Model Description .....

.....

.....

Model Scale ..... Length ..... Width ..... Height ..... Weight .....

Type of construction .....

.....

Parts not made by you and commercial items .....

.....

Have you supplied a photograph? (Y/N) .....

Are you supplying Judges Notes? (Y/N) .....

Value of model (Highbury House Communications plc will not insure the model unless a value is entered) £.....

Name and address of local newspaper .....

.....

NB Please make a copy of this form and any photographs enclosed for your own reference. Please note that Highbury House Communications plc will not accept liability for any loss of documents or photographs submitted with this form

TO HELP YOU GET THE BEST FROM THE MODEL ENGINEER EXHIBITION

These notes are written purely for guidance. Full information is contained in the Competitors' Information booklet which is sent to every entrant as part of the information package. If you have an item and are unsure as to the Class into which it should be entered, leave that section blank and we will take care of it. The Judges have the right to move any competition exhibit into another class if they feel that by doing so its chances of gaining higher marks or a more appropriate award are improved.

If the item is offered as a Loan exhibit please indicate this by writing Loan on the form in the box identifying the Class. Loan models are not judged but carry all other privileges associated with competition entries.

Part built models are particularly welcome in the Loan Section; visitors like to see work in progress, and entry does not preclude the item being entered in competition when completed.

The classes listed below are those associated with mainstream model engineering.

Club exhibits

Where a club is exhibiting, each model should be entered on a separate entry form and clearly identified as a club exhibit by entering Loan/Club in the class section box. This ensures that we have a full record of all models on display during the show and facilitates matters of administration and insurance.

Additional forms

If you do not wish to deface your copy of the magazine we are happy to receive photocopies of the entry form, one for each model. We will be pleased to send out extra forms if required, so if you know of a modeller who is not a reader of one of our magazines but who you think may wish to participate, please advise them to contact our Exhibitions Office , or simply photocopy the entry form for them.

The success of the show depends largely on the number of models on display. Your work could well be the stimulus which inspires someone else to start in the hobby. There can be no doubt that this event is our showcase on the world of modelling in all its aspects. Every modelling discipline needs more and more participants, and it is by displaying not only the crème-de-la-crème, but also examples of work of a more achievable standard, that people are encouraged to join into the wonderful world of modelling, in whatever aspect.

We look forward to seeing a sample of your work at the show!

COMPETITION CLASSES

Engineering Section

A1 Hot air engines.
A2 General engineering models (including stationary and marine engines).
A3 Internal combustion engines.
A4 Mechanical propelled road vehicles (including tractors).
A5 Tools and workshop appliances.
A6 Horological, scientific and optical apparatus.
A7 General engineering exhibits — not covered by the above

Railway Section

BI Working steam locomotives 1in scale and over.
B2 Working steam locomotives under 1in scale.
B3 Locomotives of any scale, experimental, freelance or based on any published design and not necessarily replicas of full size prototypes, intended for track duties.
B4 Scratchbuilt model locomotives of any scale, not covered by classes BI, B2, B3, including working models of non-steam, electrically or clockwork powered steam prototypes.
B5 Scratchbuilt model locomotives gauge 1 (10mm scale) and under.
B6 Kitbuilt model locomotives gauge 1 (10mm scale) and under.
B7 Scratchbuilt rolling stock, gauge 1 (10mm scale) and under.
B8 Kitbuilt rolling stock, gauge 1 (10mm scale) and under.
B9 Passenger or goods rolling stock, above 1in scale.
B10 Passenger or goods rolling stock, under 1in scale.
B11 Railway buildings and lineside accessories to any recognised model railway scale.
B12 Tramway vehicles.

Marine Models

C1 Working scale models of powered vessels (from any period). Scale 1:1 to 1:48
C2 Working scale models of powered vessels (from any period). Scale 1:49 to 1:384
C3 Non-working scale models (from any period). Scale 1:1 to 1:48
C4 Non-working scale models (from any period). Scale 1:49 to 1:384
C5 Sailing ships and oared vessels of any period - working.
C6 Sailing ships and oared vessels of any period - non-working.
C7 Non-scale powered functional models including hydroplanes.
C8 Miniatures. Length of hull not to exceed 15in for 1:32 scale; 12in for 1:25 scale; 10in for 1:16 scale; 9in for 1:8 scale. No limit for smaller scales.
C9 For any model boat built from a commercial kit. Before acceptance in this class the kit must have been readily available for at least 3 months prior to the opening date of the exhibition and at least 20 kits must have been sold either by mail order or through the retail trade.

Scale Aircraft Section

D1 Scale radio control flying models
D2 Scale flying control-line and free flight
D3 Scale non-flying models, including kit and scratch-built
D4 Scale flying radio controlled helicopters

Model Horse Drawn Vehicle Section

G1 Carriages & other sprung vehicles. (Omnibuses, trade vans etc.) Wagons, carts and farm implements. Caravans.

Junior Section

J1 For any type of model, mechanical or engineering work, by an under 14 year old.
J2 For any type of model, mechanical or engineering work, by an under 16 year old.
J3 For any type of model, mechanical or engineering work, by an under 18 year old.

All entries will be judged for standard of craftsmanship, regardless of the modelling discipline, i.e. a boat will not be competing against a military figure. Providing a model attains sufficient marks it will be awarded a gold, silver or bronze medals

Model Vehicle Section

K1 Non-working cars, including small commercial vehicles (e.g. Ford Transit) all scales down to 1/42.
K2 Non-working trucks, articulated tractor and trailer units, plus other large commercial vehicles based on truck-type chassis, all scales down to 1/42.
K3 Non-working motor bikes, including push bikes, all scales down to 1/42.
K4 Non-working emergency vehicles, fire, police and ambulance, all scales down to 1/42.
K5 Non-working vehicles including small commercial vehicles (e.g. Ford Transit). Scale from 1/43 or smaller.
K6 Any available body shells including Concours, in any scale or material, to be judged on appearance only.
K7 Functional model cars/vehicles which must be able to move under its own power of any type. Can be either free-running, tethered radio controlled or slot car, but must represent a reasonable full size replica

DUKE OF EDINBURGH CHALLENGE TROPHY

Rules and Particulars

1. The Duke of Edinburgh Challenge Trophy is awarded to the winner of the Championship Award at the Model Engineer Exhibition.
2. The trophy remains at all times the property of HIGHBURY HOUSE COMMUNICATIONS PLC.
3. The name of the winner and the date of the year in which the award is made will be engraved on the trophy, which may remain, at the discretion of HIGHBURY HOUSE COMMUNICATIONS PLC in his/her possession until required for renovation and display at the following Model Engineer Exhibition.
4. Any piece of model engineering work will be eligible for this Championship Award after it has been awarded, at The Model Engineer Exhibition, a Gold or Silver medal by HIGHBURY HOUSE COMMUNICATIONS PLC.
5. No model may be entered more than once.
6. Entry shall be free. Competitors must state on the entry form:
   (a) That exhibits are their own bona-fide work.
   (b) Any parts or kits that were purchased or were not the outcome of their own work.
   (c) That the model has not been structurally altered since winning the qualifying award.
7. HIGHBURY HOUSE COMMUNICATIONS PLC. may at their sole discretion vary the conditions of entry without notice.

COMPETITION RULES

1. Each entry shall be made separately on the official form and every question must be answered.
2. Competition Application Forms must be received by the stated closing date.

LATE ENTRIES WILL ONLY BE ACCEPTED AT THE DISCRETION OF THE ORGANISERS.

3. Competitors must state on their form the following:
   (a) Insured value of their model.
   (b) The exhibit is their own work and property.
   (c) Parts or kits purchased.
   (d) Parts not the outcome of their own work.
   (e) The origin of the design, in the case of a model that has been made by more than one person.

NOTE: Entry in the competition can only be made by one of the parties and only their work will be eligible for judging.

4. Models will be insured for the period during which they are in the custody of HIGHBURY HOUSE COMMUNICATIONS PLC
5. A junior shall mean a person under 18 years of age on December 31st in the year of entry.
6. Past Gold and Silver medal award winners at any of the exhibitions promoted by HIGHBURY HOUSE COMMUNICATIONS PLC. are eligible to re-enter their model for the 'Duke of Edinburgh Challenge Trophy.'

Past winners at any of the exhibitions promoted by HIGHBURY HOUSE COMMUNICATIONS PLC. will not be eligible for re-entry into the competition unless it has been substantially altered in any way.

7. HIGHBURY HOUSE COMMUNICATIONS PLC. reserve the right to:
   (a) Transfer an entry to a more appropriate class.
   (b) Describe and photograph any models entered for competition or display and to make use of any such photographs or descriptions in any way they may think fit.
   (c) Refuse any entry or model on arrival at the exhibition and shall not be required to furnish a reason for doing so.
8. Entry into the competition sections is not permitted by:
   (a) Professional model makers.
   (b) Anyone who has a financial interest in the direct supply of materials and designs to the public.

NOTE: If unsure, please contact the Competition organisers, prior to the show.

9. The judges' decision is final. All awards are at the discretion of the judges and no correspondence regarding the awards will be entered into.
10. Exhibitors must present their model receipt for all models collected at the end of the exhibition and sign as retrieved.
11. The signed release for each model must be presented to security staff when leaving the exhibition complex with display model(s) after the close of the exhibition.

IMPORTANT NOTE PLEASE MAKE COPIES, INCLUDING PHOTOGRAPHS, OF ALL INFORMATION RELATING TO YOUR MODEL, AS HIGHBURY HOUSE COMMUNICATIONS PLC *WILL NOT ACCEPT LIABILITY FOR ANY LOSS.*

CLOSING DATE 12TH DECEMBER 2005

MODEL ENGINEER

CLASSIFIED
Advertisements

Send to Model Engineer Classified Department, Highbury House Communications, 4th Floor Berwick House, 8-10 Knoll Rise, Orpington, Kent BR6 0EL.
Fax: (01689) 886666, Email: trobertson@highburyleisure.co.uk
All advertisements will be inserted in the first available issue. There are no reimbursements for cancellations. All advertisements must be pre-paid.
The Business Advertisements (Disclosure) Order 1977 – Requires all advertisements by people who sell goods in the course of business to make that fact clear. Consequently all trade ads in *Model Engineer* carry this 'T' symbol

MODELS AND MATERIALS

ALL LOCOS AND STEAM ENGINES REQUIRED 3½" – 5" – 7¼"
Part built or Finished in any condition. Complete collections purchased
FOR CASH – Distance no object, available 7 days a week
Please telephone Kevin on 01507 358808 for a friendly and informal chat

PHOENIX PRECISION
The Railway Livery Specialists
for authentic colour paints and waterslide transfers
Monday - Friday 10 am - 4 pm
Except Exhibition Weekends
Send S.A.E. and 50p (stamps accepted) for a copy of our full catalogue to:-
PHOENIX PRECISION PAINTS LTD
P.O.Box 8238, CHELMSFORD Essex. CM1 7WY
e-mail: sales@phoenix-paints.co.uk Tel: (01245) 494050 website: www.phoenix-paints.co.uk

Winter Model Engineering Tour
to Sinsheim Exhibition, Germany
January 2006 (by road, coach or air)
Individuals or groups.
Tel: 01980 621418
www.historyinharmony.com

Myford
Enjoy a day with us at the
MYFORD OPEN HOUSE
Wednesday 26th October
to
Saturday 29th October 2005
0115 925 4222
or e-mail
sales@myford.com
for further details

PHOENIX LOCOMOTIVES LTD
Class 52 Western and
Class 50 Hoover in 5" gauge
Battery Electric
www.phoenixlocos.com
Phone 01704 546 957

SOCKET SCREWS
Cap. Csk. Button. Set (Grub). Shoulder
METRIC. BA. BSF. BSW. UNF. UNC
Hexagonal & Slotted Screws Nuts & Washers.
Dowel & Spring Pins. Dormer HSS Taps & Drills. Draper Tools.
NO MINIMUM ORDER **PROMPT SERVICE**
Send 4 x 1st class stamps for our latest catalogue
Special offer * * * * * **Workshop Discount Pack** * * * * *
30 different packets of socket, hex. and slotted screws
Pack 1. BA **8BA to 2BA.**
Pack 2. Metric M2 to M6.
Catalogue value of pack is over £35.00 + p/p
Either pack on offer to you
for only £24.95 + £2.95 p/p
Send for this offer and benefit from a very useful stock of screws in your workshop.
You will not be disappointed. Refund guaranteed.
Emkay Screw Supplies (ME)
74 Pepys Way Strood Rochester Kent ME2 3LL
Email: emkaysupplies@onetel.net
Tel: 01634 717256 **www.emkaysupplies.co.uk** *Mail Order Only*

BA FASTENERS IN BRASS STEEL & STAINLESS
SPLIT PINS, TAPER PINS,
ROLL PINS, TAPS, DIES,
DRILLS, NUTS WASHERS,
RIVETS, MATERIALS
Send Stamped addressed envelope plus two first class stamps for 28 Page List (Overseas £1.50) 'Quote Me'
"ITEMS" MAIL ORDER LTD,
46, ST. MARTINS ROAD, NORTH LEVERTON,
RETFORD NOTTINGHAMSHIRE DN22 0AU
Telephone 01427 884319 Fax 01427 884319

PARTBUILT MODELS BOUGHT. All locomotives, at any stage of construction. Completed models also bought regardless of condition. Traction engines and all Stuart stationary engines wanted – beam, vertical, horizontal etc, part built or complete. Will travel any distance. Please telephone Graham, 0121 358 4320. (T)

For Sale. Goodhand, all copper, Belpaire boiler for 5" gauge Super-Lland. New and unused. £600 o.n.o. Tel: 01473 684927 (Suffolk).

For Sale. 0-4-0 5" gauge steam locomotive. Steamed twice, immaculate condition. Offers around £3,750. Contact Bryan. Tel: 01546 602918 (Argyll).

For Sale. 4" Garrett Traction engine. 03 Reg 21/2 years old with matching Tow behind trailer. £14, 750. Tel: 07702 566271 (Lancs).

For Sale. 2 hydrostatic drives Eaton 6, complete with transaxle to build. Crankpin drive loco. One with Honda 11hp. £125 & £225. Tel: 0151 327 2523 (Merseyside).

Wanted. All and any steel boilered locos, any gauge, nothing refused. Tel: 0151 327 2523 (Merseyside).

Wanted. 6 of 5" gauge, 20 spoke, 7¼" diameter driving wheel castings with/without balance weights. Tel: 01229 832710 (Cumbria).

2" scale Clayton Steam Wagon. Drawings, castings, gears, etc. Finished professional boiler. Total list price inc. VAT over £2100. Best offer over £1000 secures. Tel: 01628 484501 (Bucks).

Wanted. 7¼" Signapore complete locomotive needing boiler and overhaul completed or part built chassis. Tel: 07766 240753 (Bedfordshire).

Drawings wheels lost wax castings for 5" gauge GWR' castle saint county modified hall (Pete Rich Design). Tel: 01495 750487 (Gwent).

Stirling Hot Air Engine Fan, Kerosene Lamp powered, bore 2", height 3 foot, weight 28 pounds, £340. Tel: 61-8-83273039 (Australia).

Wanted. Back issues of Live Steam 1979 - 1997. Model TEC 1987 - 2000. Tel: 01736 641200 (Cornwall).

Bound Volumes M.E. The Editor of Model Engineer is looking for a set of bound volumes of Model Engineer for his personal use. Will purchase for a reasonable price. David Carpenter. Tel: 01689 887255.

ATTENTION MODEL MAKERS
A wide selection of used workshop machinery Boxford, Viceroy, Colchester & Harrison Mills, drills and wood lathes.
BBC MACHINE TOOLS LTD
Carluke, Strathclyde, Scotland.
Tel: 01555 751121
Fax: 01555 751682

STATION ROAD STEAM
Good prices paid for live steam models in any condition, broken or part-built through to exhibition quality. Collections purchased. Locomotives, traction and stationary engines, bought, sold and part-exchanged

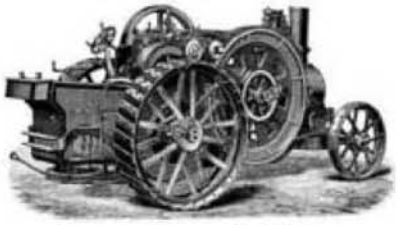

• Locomotives from gauge 1 to 10 1/4 inch •
• Miniature railway equipment, rolling stock etc •
• Traction engines from 3/4 inch to half full-size •
• Stationary engines from table-top models to full size, including designs by Stuart Turner, Westbury •
• Spirit, gas and coal-fired boilers in all sizes •
• All types of restoration projects & part-built models •
Fully serviced and tested locomotives and traction engines supplied with our renowned "no quibble" written warranty
Large range of items in stock, available for inspection and trial at our premises at any time, by appointment
Comprehensive workshop and test track facilities on site.
Advice, valuations and driving tuition freely given
World-wide mail-order service, goods supplied on 7 days approval, competitive shipping rates.
Fully illustrated and priced catalogue online at
www.stationroadsteam.com
Telephone Lincoln 01526 320012

COWELLS SMALL MACHINE TOOLS LTD
Tendring Road, Little Bentley, Colchester, Essex, CO7 8SH
Tel/Fax +44 (0) 1206 251792 E-mail sales@cowells.com
MANUFACTURERS OF PRECISION SCREW CUTTING LATHES, 8MM HOROLOGICAL COLLET LATHES AND MILLING MACHINES.
www.cowells.com

BOOST PHASE CONVERTERS

- Price Guarantee
- Performance Guarantee
- 3 Year Warranty
- Worldwide Delivery
- Outstanding Design
- Comprehensive Support

Boost Energy Systems
Park Farm, West End Lane,
Warfield, Berkshire RG42 5RH
Tel: 01344 303 311
Fax: 01344 303 312
Mob. 07952 717960
www.boost-energy.com
info@boost-energy.com

High quality UK phase converters since 1957

RCM ENGINEERING LTD.

Machine Tools. Taps & Dies.
Hand Tools. Materials.
B.A. Nuts & Bolts. Machining Service

23 Egerton Road, Dronfield,
Sheffield S18 2LG
Tel: 01246 292344
Fax: 01246 292355

Mon-Fri 8.30-5.30
Sat 10-3
Sun CLOSED

(Out of hours appointments also available)

WHY NOT EMAIL YOUR ADVERTISEMENT DIRECT TO MODEL ENGINEER ON

tony.robertson@highburygroup.com

TODAY

WESTERN STEAM

WS ME

Model Engineers

Founder Member Assn of Copper Boiler Manufacturers (ME)

COPPER BOILERS

For Locomotive, Traction, Marine & Stationary engines, Silver Soldered throughout Test certificate issued

Write or phone:
Helen Verrall
Unit 4A, Love Lane, Burnham-on-Sea
Somerset. TA8 1EY
Tel: 01278 788007
Visit Website: www.westernsteam.co.uk

PLEASE NOTE NEW ADDRESS AND TELEPHONE NUMBER

WANTED

Complete Workshops Purchased or Single Machines & Models, Clock making Equipment & Other Engineering Equipment. Prompt Attention, Instant Decision, Immediate Payment and Removal. For a professional service from a company with over 17 years experience in the model engineering field call:

G and M Tools,
The Mill, Mill Lane, Ashington, West Sussex. RH20 3BX
Tel: 01903 892510 or
e-mail enquiries@gandmtools.co.uk

PRECISION TRANSFERS

Waterslide Railway Transfers

Lots of new transfers in our Catalogue No.6

For full catalogue send a stamped, self addressed envelope, together with 2 first class stamps to:-

The Precision Transfers Company
P.O.Box 876 CHELTENHAM, GL52 3WF
E-mail:- sales@precisiontransfers.co.uk

Myford ML7 lathe 3 & 4 jaw chucks, faceplate, change gears, 4 way toolpost. £450. Tel: 01709 379045 (Rotherham).

BCA machines choice of used Tenga. Also accessories and spares. Other types of machines supplied and purchased. Tel: 01425 622567 (Hants).

Alexander 2A Engraver/pantograph miller single-phase, ideal for model making. £350. Tel: 01643 703 826/Mob: 07792 603 226 (Somerset).

Myford ML7 Trylever Lathe, excellent condition. No wear. Myford cabinet base, 2 speed motor, new chucks, full accessories. £495. Tel: 01493 369269 (Great Yarmouth).

Warco combination lathe WMT 300/2, 18 months old. £500. Delivery possible. Tel: 01747 860274 (Wilts).

Myford ML7 Cabinet lathe original, grey, 3 jaw chuck. Good condition. £775 o.n.o. 6pm-7.30pm. Tel: 01547 530161 (South Shropshire).

WHY NOT CALL TODAY!!

GB BOILER SERVICES

COPPER BOILERS FOR LOCOMOTIVES AND TRACTION ENGINES etc

MADE TO ORDER

Constructed to latest European Standards

71/4" gauge and P.E.D. category 2 Specialist

NO VAT

Enquiries, Prices and Delivery to:

Tel: Coventry 02476 733461

Mobile 07817 269164

Boley No. 3 plain lathe 90mm C.H. 13 collets, 3 jaw chuck. £220. Hardinge tailstock off a DV59 lathe. £75. Tel: 01474 706661 (Longfield Hill).

Denford 'Orac' CNC lathe 3½"x13", 3 Jaw QC toolpost. Good condition. Operating, spares, manual £250. Tel: 01686 627547 (Powys)

Tom Senior milling machine vertical/horizontal. Good condition. Single phase. £900. Tel: 01844 291200 (Bucks).

New/unused/unwanted gift. Mini lathe swing, 140mm between centres 250mm screwcutting. 0-2000 self act £200. Tel: 01305 852417 (Dorset).

Wanted: Milling table for Hobbymat milling machine. Please phone Dave. Tel: 01903 850660 (West Sussex).

Hobbymat BFE 65 mill/drill £50. Bench mounted Hydraulic press £30. Tel: 01295 252798 (Oxon).

ALL 7¼" GAUGE LOCOS WANTED

Hunslet, Hercules, Jessie, Romulus, Bridge, Dart, Holmeside, Paddington, GWR Mogul-43xx, GWR King, Black Five, A3, B1, Britannia-all BR type standard gauge tender engines, etc, and Narrow Gauge engines.
PARTBUILT OR FINISHED in any condition.
For a friendly and personal service, any distance.

Please telephone Graham
0121 358 4320

"CALL 01689 886650 TO PLACE YOUR AD HERE"

ALL TRACTIONS ENGINES WANTED

Minnie, Royal Chester, Thetford Town, Burrel Compound, Roller, Steam Wagon, Burrell, Allchin, etc. 1" upto 3"
PARTBUILT OR FINISHED in any condition. For a friendly and personal service, any distance.

Please telephone Graham
0121 358 4320

Model Engineering Products (Bexhill)

www.model-engineering.co.uk
Email: diesel@17bexhill.fsnet.co.uk

Manufacturers of 5" and 7¼" diesel outline battery electric locomotives and rolling stock.
Visit our shop to see the stock.
Colour brochure inc. p&p £1.75
PHONE/FAX. 01424 223702
MOBILE 07743 337243

17, SEA ROAD, BEXHILL ON SEA,
EAST SUSSEX. TN40 1EE.

PUBLICATIONS

CLOCK CONSTRUCTION & REPAIR
Books by John Wilding and W.R. Smith
Free Catalogue
01420 487 747
www.ritetimepublishing.com

ALL ELECTRIC & PETROL ENGINES WANTED

Buses, Cars, Lorries etc. - in fact anything considered and in any condition including part builds. Also Stuart Turner, Bing, Basseett Lowke etc. Collection anywhere available 7 days a week.

Please telephone Kevin
01507 359033

Lathe Proxxon PD230E (Improved Toyo 210), some accessories brand new still boxed. £500. Tel: 01788 565840 (Rugby).

Myford Super7B 32" Bed Cabinet stand, Tray, blocks. All original, superb condition. Chuck, faceplate, tools. £2000. Evenings. Tel: 01225 764219 (Wilts).

M.E. Workshop Machines, equipment, tools, materials etc. Sale due to ill health. £1,000 the lot. Tel: 01484 864367 (West Yorkshire).

Colchester Student Capstan unit. Sold as used. However, never been on a lathe. Ex. College. As new. £185. Tel: 07721 761963 (Cornwall).

ALL 3½" GAUGE LOCO's WANTED

Tich, Juliet, Rob Roy, Firefly, Jubilee, Maisie, Doris, GWR Hall, Britannia, Hielan Lassie, etc. Partbuilt or finished. Nationwide Coverage. For a friendly and personal service, any distance

Please telephone Graham
0121 358 4320

PENNYFARTHING TOOLS Ltd. The Specialist Tool shop

Quality Secondhand
Machine Tools
at Sensible Prices
We purchase complete Workshops, Machines, Models and Hand Tools.
Agreed settlement on inspection - Distance no object

Tel: Salisbury 01722 410090
Web Site: www.pennyfarthingtools.co.uk

Bidwells

Myford Super 7 on stand £1275, Centec Mill 2A £775, Boxford & Myford Vert Slides £p.o.a., Medding 10SP. Pillar DR £395, Boxford Lathe BVD QCTP £875, Various 6" 4 Jaw chucks, Myford £p.o.a., various wood M/C's. Ask for details

Contact Mike on
Tel: 01245 222743 (Essex)

Carr's Solders

Cadbury Camp Lane,
Clapton in Gordano, Bristol. BS20 7SD
Tel:**01 275 852 027** Fax:**01 275 810 555**
Email: sales@finescale.org.uk
www.finescale.org.uk

NEW! - Lower cost, compact, high performance speed controller and motor combination.

The new CL range features start, stop and emergency stop buttons and speed control with forward, reverse and jog. It comes complete with high quality motor and is ready to mount, plug in and go!

Call us now for more information and friendly advice on
01925 444773
or visit www.newton-tesla.com

From only £390 inc VAT

NEWTON TESLA
The Driving Force in Automation

Unit G18, Warrington Business Park, Long Lane, Warrington, Cheshire WA2 8TX, UK

www.arceurotrade.co.uk

Unbeatable Value Engineering Products by Mail Order

Shop on-line or call us on 0116 269 5693 for Catalogue No.4

Arc Euro Trade

"HAVE YOU SEEN MODEL ENGINEER WORKSHOP YET!

EVENSON ENGINEERING

Quality Machines and Tooling

Machine Sales

NEW MACHINERY IN STOCK

Harrison M300 long bed/gap 3 jaw 3pt steady face plate the cleanist machine we have seen £2500
Boxford ME10A fully tooled with t/scot crss slide Q.C.T. new in 1987 1 phase absolutely immaculate with imperial gear box £1800
Tomy Senior vert/horiz mill in good condition, 1 mark in table 1 phase £1200
Garbo metal sheer with stand £180
Viceroy vertical mill 30 int excellent height under spindle £1400
Myford ML7 / tri lever cab/stand fully tooled 1 phase, excellent cond £1000
Myford ML7R Long bed lathe with g/box, cab/stand, fully tooled 1 phase excellent condition £1850
Myford ML7 on cab/stand, 1 phase, good condition £750
Harrison M250 gap bed 1987, runs lovely but needs painting & slight surface rust....£1400
Colchester Master complete but untidy....£650
2 off Boxford pillar drills ecellent condition 1 is probably unused and modern..£400 - £600
One Only left Boxford 1130 Lathes $5^1/_2$" x 30" G/Box. Fully tooled. with Emco milling head, like new cond. £2275
Viceroy Sarp Edge Grinder for plane blades & chisels etc. As new. £275
Bridgeport mill 42" x 9" Table power feed. D.R.O. Belt head 1986. ....£2850
Colchester Student R/H 6"x24" with tooling QCT coolant....£1000
Harrison L5A Lathe G/Box and Tooling £1,200
Versatool Tool Cabinet....£150
Close Pole Magnetic Bases ....POA
Colchester Triumph R/H Taper Turning Attachment....£400
3 point steady for Dean Smith and Grace lathe. £200
Union Graduate bowl turning lathe, excellent condition....£675
Bridgeport mill with dro vari head - power feed, excellent condition £2250
3 Harrison L5A lathes and 2 Boxfords plus workshop tooling coming in soon, Ex Grammer School
4 Small electric furnances ....£POA

NEW TOOLING IN STOCK

Harrison M300 coppy turning attachment complete £475
Kenedy power hacksaw £175
Tom Senior slotting head....£300
Duplex 226 tool post frinder as new (small) £300
Boxford boaring table....£125
Boxford draw bar collet set inc 18 collets most as new £250
Myford compound vertical slide £125
Boxford taper turning attachment....£150
HMyford Minicop copy turning lathe on cabinet ....P.O.A.
Wadkin Universal Cutter Grinder Type N.H. with lots of tooling £1,500
Harrison L5 Lathe Gap Bed with Tooling £800
3 x Harrison L5 lathes tooled ....£700 each
Grimston drill floor stand with tapping plus x-y compound table. ....£850.
Colchester master straight bed lathe with clutch. Has electrical fault. £600

Lots of New Stock NOW IN!!

MISCELLANEOUS

Abwood vert-spindle surface grinder 18"x6" mag chuck, hand operated, little used £500
LBridgeport milling head, 2 speed motor R8 power quill (fits most mills, ie Adcock & Shipley 1ES)....£850
Eclipse magnetic chuck 19" x 12" £300
Colchester Chipmaster lathe (breaking) £350
Collet chucks, box blocks, vices, angle plates, surface plates etc ....Please phone
Student 18" Faceplate £95
Hort Pedestal Sander 15 Disc Ex Uni £350

WE ALSO PURCHASE QUALITY MACHINES & TOOLING • DELIVERY SERVICE AVAILABLE PLEASE TELEPHONE BEFORE TRAVELLING - WEEKEND & EVENING VIEWING AND DELIVERY SERVICE

More machines always in stock. **Tel: 01274 402208 & 780040 Mobile 07050 272169** 4 Duchy Crescent, Bradford, BD9 5NJ

READERS GET FREE FOR SALE OR WANTED ADS!

R.A. ATKINS

MYFORD ML7 LATHE	£525	MEDDINGS M4 7/8" BENCH DRILL	£225
MYFORD SUPER 7 BENCH LATHE	£725	MYFORD Q/C TOOL POST SET, NEW	£110
MYFORD SUPER 7 CABINET LATHES PXF	£2,100	MYFORD 4" GRIP TRV 3 JAW CHUCKS	£150
BOXFORD T.S. 1020 LATHE, TOOLED	£1,900	MYFORD VERT SWIVEL SLIDE	£195
FOBCO BENCH / PILLAR DRILLS 1/2"	£195	MYFORD TAPER TURN ATTACH, UNUSED	£225
NAEROK RDM 350 MILL DRILL, TOOLED	£450		
PINNACLE PDM 30 MILL DRILL, EXCELLENT	£550		
CENTEC 2C UNIV MILL QUILLHEAD	£725		
MYFORD VM-C VERT MILL, 3 AXIS DRO	£1,375		
MYFORD VM-E VERT MILL, TOOLED	£1,800		

WE ARE CONSTANTLY BUYING MODEL ENG WORKSHOPS. PROMPT INSPECTION SETTLEMENT. ESTABLISHED OVER 35 YEARS.
HUNTS HILL HOUSE, HUNTS HILL, NORMANDY, GUILDFORD, SURREY GU3 2AH
Tel: (01483) 811146 Fax: (01483) 811243

Seen My CAT!

Now on-line

Models, Machinery, Misc.

www.theengineersemporium.co.uk

Ortec

Ortec are manufacturers of low cost, high quality, precision digital readout - DRO for machine tools such as milling machines for the hobbyist and model engineering user. We offer a complete range of readouts from 1 to 3 axis in a variety of encoder lengths.

Phone +44 (0)1481-235708
www.ortec.freeserve.co.uk

THINKING OF SELLING YOUR LATHE, MILL OR COMPLETE WORKSHOP

and want it handled in a quick, professional no fuss manner? Contact David Anchell, Quillstar (UK) Ltd (Nottingham).

Tel 0115 9255944 Fax 0115 9430858

Wanted

Two maybe three if price is ok - Peatol Lathes for my students in Denmark.

Barry Hipwell
123 Park Road
Loughborough LE11 2HD

Tel: 01509 215619

TOOLCO

The home of good quality used tools and machinery

www.toolco.co.uk

or send for full itemised stocklist.

Unit 4, Ebley Ind Park, Ebley, Stroud, Glos GL5 4SP

Important: Phone for opening times before travelling.
(Just 4 miles J13 M5 Motorway) Tel: 01452 770550
E.Mail: sales@toolco.co.uk Fax: 01452 770771

TOOLS PURCHASED

Hand Tools and Machinery, whole or part collections – old and modern. Will call.

Tel: Alan Bryson.
Tel: 01823 288135 (Taunton).

LYNX MODEL WORKS LTD.
Dovecote House, Maltby le Marsh, Alford, Lincs LN13 0JP
Tel: 01507-451565 Mobile: 07899-806689
Website: www.lynxmodelworks.co.uk
Email: info@lynxmodelworks.co.uk

WORKING SCALE MODELS AND SPECIALIST SERVICES

Lynx Model Works - 5 Specialist Engineers working together to not only build beautiful Working Live Steam Locomotives from gauge 0 to 10 $^{1}/_{4}$, Traction Engines from $^{3}/_{4}$ to 6" Scale, and Stationary Steam Plant Engines. We will also complete your unfinished project for you or renovate the one youive just bought, inherited or simply wish to rejuvenate in our Restorations Division.

We have expertise in building, completing and renovating the very beautiful and elegant Clarksonis of York range of Working Steam Models and currently have 4 of these highly respected locomotive designs being built as specialist commissions for clients.

Lynx Model Painting and Machining Services will give your cherished model that professional, lined finish and also help you by manufacturing Specialist parts to assist you complete your current or planned project.

Lynx Model Boilers sells a range of Fully Certificated and EC Compliant Copper and Steel Boilers, some ex-stock.

We are also Agents for Stuart Models and build the ones that Stuart don't!

Visit our Website (www.lynxmodelworks.co.uk) or contact us today with your requirements for a no-obligation quote or discussion. A full colour A4 Brochure shortly available - telephone or email for further details.

Renowned Quality & Service Together at the Right Price

ALL MAJOR CREDIT AND DEBIT CARDS ACCEPTED

Call John Clarke on 01507-451565

MODEL MAKING METALS

$^{1}/_{32}$in. to 12in. dia. bright steel,stainless steel, bronze, spring steel, brass, aluminium, silver steel, steel tubes, bolts, nuts & screws, tap dies + drills, white metal casting alloys. Fine materials, chain, plastic, Lathe milling machines and equipment, new and secondhand.

Mail order nationwide and worldwide callers Mon.-Fri. 9-5pm.
Access/Visa welcome

Send now for a free catalogue or phone:
Milton Keynes Metals, Dept. ME,
Ridge Hill Farm, Little Horwood Road, Nash, Milton Keynes,
MK17 0EH Tel: (01296) 713631 Fax: (01296) 0713032
Web: mkmetals.sageweb.co.uk Email: sales@mkmetals.co.uk

CALL TODAY!

Colchester Student Hydraulic profiling attachment. Sold as used but never fitted to lathe. Complete Assembly. £350. Tel: 07721 761963 (Cornwall).

Little Samson Models

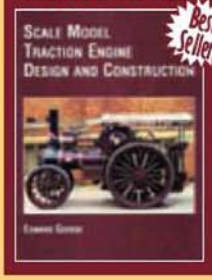

38 Wheatsheaf Way, Linton, Cambridge CB1 6XD
www.littlesamson.co.uk
email: edward@littlesamson.co.uk

Little Samson Steam Tractor
Available in 3" and 4" scale

Universal Carrier Steam Lorry
Available in 3" scale

Both Models serialised in the Model Engineer
Machine cut gears including differential
Fully tested and certified boilers (Bell Boilers)
Comprehensive sets of laser cut components
Lost wax castings, name plates, spun brass chimney caps
Book £35 inc p&p (UK), signed on request
All normally in stock and posted by return
Cast wheels option saves weeks of work
Catalogue £2.50 post free (UK) Sorry cheques only

ALL 5" GAUGE LOCO's WANTED

Hunslet, Jinty, Simplex, Speedy, BR Class 2, Horwich crab BR 8400 tank, Maid of Kent, Black Five, Jubilee, Royal Engineer, B1 Springbok, Torquay Manor, Castle, A3/A4 etc. Partbuilt or finished. Nationwide Coverage. For a friendly and personal service, any distance.

Please telephone Graham
0121 358 4320

KITTLE HOBBY

Sharp milled (not rolled) brass sections from 1mm to 10mm.
Sold in metres.
Send sae for list to:

PO BOX 5, YSTALYFERA,
SWANSEA, SA9 1YE
TEL: 01639 731005
www.kittlehobby.com

ALL STEAM LOCOS WANTED

Any condition and size considered including full collections. Collection anywhere available 7 days a week

Please telephone Kevin
01507 359033

ALL LOCOS WANTED

Any condition and size considered including plain worn out!! $2^{1}/_{2}$", $3^{1}/_{2}$", 5" or $7^{1}/_{4}$".

Try me last as I often pay better prices.

Please telephone Kevin
01507 359033

ChronoS Engineering Supplies

GRAND OPEN WEEKEND

25th – 26th – 27th November
Friday Saturday Sunday

- **MANY SPECIAL OFFERS**
- **DEMONSTRATIONS**
- **FREE GIFT FOR EVERY VISITOR**
- **REFRESHMENTS**

WIN A LATHE IN OUR FREE PRICE DRAW

PLENTY OF FREE PARKING AND VERY NEAR TO THE A5 AND M1 (Junction 11)
OPEN FRIDAY 7am - 5pm SATURDAY 9am - 5pm SUNDAY 9am - 3pm

CHRONOS LTD - UNIT 14, DUKEMINSTER TRADING ESTATE, CHURCH STREET, DUNSTABLE, BEDS LU5 4HU
TEL (01582) 471900 (5 Lines) Email: sales@chronos.ltd.uk Web: www.chronos.ltd.uk

www.brunell.com
BRUNELL MODELS
Fully illustrated catalogue: A4 size.
Over 40 models, some in full colour
UK £5.50 - Overseas £6.95
Sterling cheque or Credit card only
email: sales@brunell.com ● Fax/Ans 01524 855887
Unit 32, Heysham Business Park, Middleton Road, Heysham, Lancs. LA3 3PP

NEIL GRIFFIN
- St.Albans, Hertfordshire
Engineering Services
Machining for Model Engineers
From drawing, sketch, pattern etc.
Friendly personal service.
Telephone / Fax: 01727 752865
Mobile: 07966 195910

www.modelsteamenginesuk.com
Cotswold HERITAGE

Sussex Steam Co.
www.sussexsteam.co.uk
Live Steam Engine Kits
Newcomen, Mill
& Beam Engines
Tel 01903 770848 for a brochure

All large steam engines wanted
Anything considered from 4" to 15" traction engines, locos, boats, stationary engines. Any condition. Finished or unfinished projects. Distance no object. Will call and pay cash.
Tel: 01507 358808
(Kevin)

MENTION ME WHEN YOU CALL!!

Practical Scale - Drawings, castings, laser cut frames, etc for designs by Neville Evans (including the Highland Locos - Loch & Jones Goods, Penrhos Grange and the forthcoming Schools Class) are now available from
Polly Model Engineering Limited.
Tel: 0115 9736700
or see web page
www.pollymodelengineering.co.uk
for further details

MODEL ENGINEER

LINEAGE/SEMI DISPLAY COUPON (Model Engineer) Advertisement Dept.
Highbury House Communications, 4th Floor, Berwick House,
8/10 Knoll Rise, Orpington, Kent, BR6 0EL.
No reimbursements for cancellations.

PLEASE TICK ONE BOX ONLY

☐ WORKSHOP EQUIPMENT ☐ MODELS & MATERIALS ☐ BOOKS & PUBLICATIONS ☐ SERVICES ☐ GENERAL

PRIVATE SALE/TRADE SALE (DELETE NON-APPLICABLE)

TEL. NUMBER					

ALL ADVERTISEMENTS MUST BE PRE-PAID. NO REIMBURSEMENTS FOR CANCELLATIONS.

I enclose my Cheque/Postal Order* for £ .....for .....insertions,

made payable to Highbury House Communications

(*Delete as necessary) or Please debit my Mastercard/Barclaycard No. Expiry Date

£ ..... for..... insertions.

Name.....

Address.....

.....

.....Post Code .....

Daytimes Tel. No .....

email ..... @ .....

Signature .....Date .....

PRICE GUIDE – Tick one box

18 words or less FREE!! (private sales only) ○

18-25 words, in colour only £10 ○

26 words + in colour £15 ○

Private ad, in box, full colour, endless word count – 2.5 x 1 £25 ○
3 x 1 £30 ○
3.5 x 1 £35 ○

New Online Shop at www.ajreeves.com

REEVES MODEL ENGINEERS 2000

Over 8000 different items available to order 24 hours a day, 7 days a week!

New, secure online ordering from Reeves 2000

Visit the Shop That's Got the Lot!

REEVES MODEL ENGINEERS 2000

Castings,
Drawings,
Boiler Fittings,
Paint,
Transfers,
Drills,
Taps & Dies,
Bar Stock,
Rivets,
Bolts, Screws,
& Washers,
Spring Steel,
Brazing & Silver Solders
and much more.....

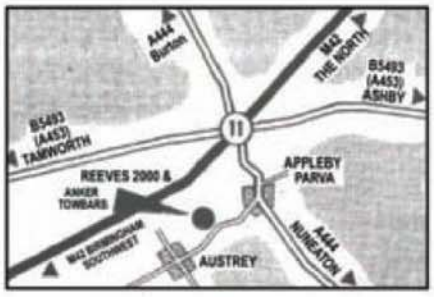

Reeves 2000,
Appleby Hill
Austrey, Warks,
CV9 3ER

9:00am- 4.30pm Monday - Friday
9:00am-12.30pm Saturday

The 'International Range' of Boiler Fittings

The World's Largest Stockists of Model Engineering Supplies

REEVES MODEL ENGINEERS 2000

Drawings and Castings Currently Available

31 Stationary Engines

including....
Centaur Gas Engine
Lady Stephanie Beam Engine
Mary Beam Engine
Nicholas Vertical Engine
Triple Expansion Marine Engine
Trojan Vertical Engine
Vulcan Beam Engine
Warrior 2 Vertical Engine....

52 'Up to 3½" Locomotives'

including....
0-4-0 Juliet Tank Loco
0-4-0 Tich Tank Loco
0-4-0 Hunslette Tank Loco
0-6-0 Rob Roy Caledonian Loco
2-6-2 Firefly G.W.R. Loco
0-8-0 Caribou Canadian International Loco
4-4-0 Virginia Early American Tender Loco
4-6-2 Britannia Class 7 BR Pacific Loco....

34 7¼" Locomotives

including....
0-4-0 Dolgoch Tank Loco
0-4-0 Elidir Tank Loco
0-4-0 Romulus Tank Loco
0-4-2 Tom Rolt Tank Loco
0-6-0 Holmside Tank Loco
0-6-0 Paddington Tank Loco
4-4-2 Lorna Doone Loco
4-6-0 King George V Loco....

13 Road Going Vehicles

including....
1" SC Minnie Convertible Engine
1.5" SC AllchinTraction Engine
1.5" SC Marshall Portable Engine
2" SC Clayton Waggon
2" SC Lincolnshire Lad Traction Engine
2" SC Thetford Town Traction Engine
3" SC Foden Waggon
4" SC Foden Timber Tractor....

62 5" Locomotives

including....
0-4-0 Ajax Tank Loco
0-4-0 Dolgoch Tank Loco
0-6-0 Jack Tank Loco
2-4-0 Asia "Europa" Class Loco
4-2-2 Stirling Single Tender Loco
4-4-0 Maid of Kent Tender Loco
4-4-0 Washington Tender Loco
4-6-0 King's Own Tender Loco....

Workshop Equipment

including....
Clock Depthing Tool
Geared Rotary & Indexing Table
George Thomas Tapping & Staking Tool
Lathe Backplates & Frontplates
Light Duty Compound Table
Reeves Sensitive Mini Drill
Sparey Tailstock Turret
Versatile Dividing Head....

For full product listings, please see our website

Trade Counter Now Fully Stocked and Open to Callers - ALL WELCOME

Reeves 2000
Appleby Hill
Austrey
Warks
CV9 3ER

9:00am-4.30pm Monday - Friday
9:00am-12.30pm Saturday

Tel: 01827 830894
Fax: 01827 830631

sales@ajreeves.com
http://www.ajreeves.com

25th Edition Catalogue

UK: £7.00 inc p&p
Europe: £8.00 inc p&p
Rest of World: £12.00 inc p&p
New Price List: 4 x 1st Class Stamps

All THE VERY BEST for CHRISTMAS!

"Workshop Practice" Series:

No. 1 Hardening, Tempering & Heat Treatment • Tubal Cain • 128pps • £ 7.95

No. 2 Vertical Milling in the Home Workshop • Throp • 96 pps • £ 7.95

No. 3 Screwcutting in the Lathe • Cleeve • 176 pages • £ 7.95

No. 4 Foundrywork for the Amateur • Aspin • 96 pages • £ 7.95

No. 5 Milling Operations in the Lathe • Tubal Cain • 128 pages • £ 7.95

No. 6 Measuring & Marking Metals • Law • 112 pages • £ 7.95

No. 7 The Art of Welding • Vause • 96 pages • £ 7.95

No. 8 Sheet Metal Work • Wakeford • 152 pages • £ 8.30

No. 9 Soldering & Brazing • Tubal Cain • 136 pages • £ 7.95

No. 10 Saws and Sawing • Bradley • 96 pages • £ 6.95

No. 11 Electroplating • Poyner • 62 pages • £ 6.95

No. 12 Drills, Taps and Dies • Tubal Cain • 104 pages • £ 7.95

No. 13 Workshop Drawing • Tubal Cain • 128 pages • £ 7.95

No. 14 Making Small Workshop Tools • Bray • 128 pages • £ 7.95

No. 15 Workholding in the Lathe • Tubal Cain • 112 pages • £ 7.95

No. 16 Electric Motors • Cox • 128 pages • £ 7.95

No. 17 Gears and Gear Cutting • Law • 135 pages • £ 7.95

No. 18 Basic Benchwork • Oldridge • 128 pages • £ 7.95

No. 19 Spring Design & Manufacture • Tubal Cain • 128pps • £ 7.95

No. 20 Metalwork Machining Hints and Tips • Bradley • 112pps • £ 7.95

No. 21 Adhesives and Sealants • Lammas • 136 pages • £ 7.95

No. 22 Workshop Electrics • Cox • 104 pages • £ 7.95

No. 23 Workshop Construction • Weiss • 104 pages • £ 7.95

No. 24 Electric Motors in the Home Workshop • Cox • 133 pages • £ 7.95

No. 25 The Backyard Foundry • Aspin • 90 pages • £ 7.95

No. 26 Home Workshop Hints & Tips • Smeed • 115 pages • £ 6.50

No. 27 Spindles • Sandhu • 144 pages • £ 8.30

No. 28 Simple Workshop Devices • Tubal Cain • 144 pages • £ 8.30

No. 29 CAD for Model Engineers • Brown • 96 pages • £ 7.95

No. 30 Workshop Materials • Weiss • 192 pages • £ 7.95

No. 31 Useful Workshop Tools • Bray • 104 pages • £ 7.95

No. 32 Unimat III Accessories • Loader • 160 pages • £ 7.95

No. 33 Making Clocks • Bray • 128 pages • £ 7.95

No. 34 Lathework: A Complete Course • Hall • 196 pages • £ 8.95

No. 35 Milling: A Complete Course • Hall • 144 pages • £ 7.95

No. 36 Photo Etching • King • 112 pages • £ 7.95

No. 37 Dividing • Hall • 96 pages • £ 7.95

Model Steam Locomotives • 1954 • Greenly • £ 19.35

Henry Greenly was perhaps the first writer of 'modern' model engineering books, *The Model Locomotive* published in 1904 forming the basis of the first edition of this book, published in 1922. Reprinted here is the eighth edition, from 1954. This was revised and updated by Greenly's son-in-law Ernest A. Steel, but remains very much Greenly's work.

Greenly's experience of designing and building model locomotives covered Gauge 1 to 15" gauge, and the editions of this book chart the increase in gauge of the models being built by model engineers, with 5" and 7¼" gauge practice becoming more and more prominent. However the smaller and larger gauges are also well covered, and the range of gauges is unique to this title.

Unlike "LBSC", who took over from him as the major writer on model locomotive building in "ME", Greenly was a trained engineer, and this is reflected here, where the writing is more succinct than "LBSC" would have used, and there are considerably more drawings and photographs, a fair few of these covering 7¼" gauge and larger.

The first four chapters cover choice of scale and gauge, locomotive types, principles of model locomotive design and boiler design. Twelve further chapters follow, each devoted to specific parts of the locomotive. All are very fully illustrated with drawings, tables and photographs - many of the latter illustrating models built by some of the twentieth century's finest builders.

Any book which remained in print over fifty years has to have been top quality, and a century after the first version appeared, this remains one of the very best books written on building model and miniature steam locomotives, and one which will prove an invaluable reference for locomotive builders in the 21st century. 322 page paperback.

Model Engineering A Guide to Model Workshop Practice • {1915} • Greenly • £ 17.35

First published in 1915, this book is another salutary reminder of just how good Greenly was. Here you get 26 pages on *The Equipment of a Model Engineer's Workshop*, 16 pages on *The Lathe and its Fitments*, 25 pages of *Notes on Lathe Work*, 33 pages of *The Various Processes Employed*, 21 pages on *Model Steam-Engine Cylinders*, 20 pages on *Types of Model Steam-Engine Cylinders*, 18 pages on *Engine Cranks, Connecting Rods, Bearings and Eccentrics*, 14 pages on *Steam-Engine Valve and Reversing Gears*, 25 pages on *Model Boiler Design and Construction*, 2 pages on *Model Boiler and Engine Valves and Fittings*, 11 pages on *Force Pumps, Injectors and Gauges*, 12 pages on *Firing Model Boilers*, 9 pages of *Historical and Other Scale "Glass-case" Models*, 14 pages on *Making a Model 1" x 1" Vertical Steam Engine*, 12 pages on *A High-speed Compound Condensing Engine and Coil Boiler*, 17 pages on *A ½" scale Model Midland Railway Express Locomotive*, 32 pages covering *A Working Model Metropolitan Railway Electric Locomotive* (Gauge 1), 26 pages on *Internal Combustion Engines*, 19 pages of *Model Railway Engineering*, 22 pages of *Miscellaneous Working Models*, and 4 pages about a *Model G.C.R. Express Locomotive* (Gauge 1 4-6-0 "Sir Sam Fay"); 407 pages in all, including the Index.

If that doesn't give you an idea of the spread of this book, take our word for it, it is considerable! And whilst it may be nearly ninety years old, the vast majority of it is useful today, even the chapter on Model Boilers, which covers model stationary and marine boilers as much as locomotives. As well as an excellent text, there are 85 photographs and 724 line drawings - this really is a book you will refer to time and time again. Paperback.

POST & PACKING:

Prices shown **INCLUDE** post & packing within the U-K.

Overseas customers please allow 10% extra for delivery.

Learning the Lost Art of Hand Scraping • 1880-1919 • £ 4.95

This book includes eight articles on Hand Scraping. This is a skill learnt by practice rather than reading, but there is a lot of good stuff here to help you get started, notably on grinding a scraper to the right shape. 48 well illustrated pages. Softcover. *See Review in 'MEW' No. 108.*

Lathe Operations • 1937 • Barritt • £ 14.35

The best lathe book we have seen that gives instructions for specific machining operations. Produced originally by the *American Technical Society* and intended for students, you get specific sections on the lathe, lathe tools and screw threads, plus 50 "job tickets" demonstrating a particular machining operation with both text and sketches of settings etc. You may not need to do the specific jobs shown, but they really illustrate a lot of maching operations you will probably need to do at some time. 164 page larger format paperback.

'LBSC' His Life and Locomotives • Hollingsworth • £26.50

Few model engineers won't have come across 'LBSC's' designs or writings: 112 designs published over 44 years, over 3000 articles published in *ME* and other magazines, the last only a month before his death at the age of 84. And he built 55 small steam locomotives himself. But what made him famous was his writing - informative, opinionated and down to earth, it gave the ordinary man the confidence to realise that he could build models if he wanted to, and then told him how to do this. In this masterly book Brian Hollingsworth looks at 'LBSC's" life, writings and designs in some detail, warts and all; it is a fascinating and highly readable book on a fascinating and highly readable man. 112 pages. 220 B & W photos and drawings. Hardbound.

Stirling & Hot Air Engines • Darlington & Strong • £ 34.75

Roy Darlington is a well know figure at shows demonstrating his models and "spreading the Gospel according to the Reverend Stirling", as he puts it. Here, helped by the CAD skills of Keith Strong, Roy describes how to design, build and optimise Stirling engines, and a broad selection of his engines is also described. Plus there is a considerable amount of information on the machining techniques Roy has used during many years of designing, developing and building hot air engines. Superbly produced. 240 pages. 400 colour photographs. Hardbound.

Jane A Pin Up at War • Saunders • £ 14.64

Along with Vera Lynn, *Jane* was an important female factor in maintaining the morale of Britain during WWII, to most of whom she was just a risque cartoon in *The Daily Mirror*. But there was a real Jane - the beautiful Christabel Leighton-Porter, who posed for all of cartoonist Norman Pett's drawings, and whose personal appearances were hugely popular. This highly entertaining book looks at both Janes, and Norman Pett, through text, 'glamour' and other photos, plus numerous copies of drawings and cartoons. 164 pages. Paperback.

Nasmyth, Wilson & Co. • Cantrell • £14.64

Good history of the locomotive building activities of this firm which produced a considerable number of locomotives for a century up till 1938, when they made a planned retreat from locomotive building. Whilst *Nasmyth, Wilson* was never quite big enough to be in the 'first rank' of locomotive builders, the longevity of many of its products was testament to their quality. 160 very well illustrated pages and a full works list. Paperback.

MAIL ORDER (No stamp required in the UK) to:

CAMDEN MINIATURE STEAM SERVICES, tel: 01373 - 830151 fax: 01373 - 830516
Freepost (BA 1502), Rode, FROME, Somerset. BA11 6UB www.camdenmin.co.uk

END OF YEAR SALE

HOME AND WORKSHOP MACHINERY

QUALITY USED MACHINE TOOLS

144 Maidstone Road, Foots Cray, Sidcup, Kent, DA14 5HS.

Telephone 020-8300 9070 – Evenings 01959 532199 – Facsimile 020-8309 6311

www.homeandworkshop.co.uk stevehwm@btopenworld.com

Opening Times: Monday-Friday 9am-5.30pm – Saturday Morning 9am-1pm

10 minutes from M25 – Junction 3 and South Circular – A205

Myford / Boxford equipment just in from retired engineer, hardly used

FROM £25

Elliot powered suface grinder "as good as it looks"

A selection of tinmans stakes

Colchester Master 2500, 61/2" x 40" lathe + gap and full power feeds and well equipped

ALSO DOWN IN PRICE

Marlco notch broaching fixture from £425 to £200
Elliot Surface grinder from £2250 to £1950
Meritus 8KVA spot welder Was £425 Now £299
Meddings MK4 fretsaw Was £345 Now £249
Eagle surface grinder + magnetic chuck Just £725
Loads of machines and parts 'in house to callers only' including steel stock

Harrison 140, 5½" x 24", gearbox, power feeds, gap bed and almost immaculate

We have a good selection of bench vices from £12.50 including the Record No.23 at £75 each

BCA jig borer/ milling/ drilling machine complete with collets & cabinet stand

Colchester Chipmaster 5" x 20", a very nice example with dual dials

Harrison vertical milling machine, 30 INT head + 30" x 8" powered table & coolant

Flamefast PB250 power burner crucible furnace

Boxford VM30 milling machine, 30 INT head + 3 Way DIGITAL READ OUT

BCA 12" rotary table

Tom Senior 'E' type milling machine, extremely rare and sought after

Jones and Shipman bench centres 4" x 24" between centres

Houser 12" rotary table in very nice order

Easi Blaster (sand) cabinet + 2HP compressor

Henry Milns 6 ½" x 48" geared head, gearbox and gap bed + tooling just in off the lorry

Elliot 8" pedestal grinder

Boxford 1130, 5 1/2" x 30"

Boxford CUD Mk III centre lathe 5" x 22" in very nice order

Mercer dial gauge imperial reads to .0005" Ex Mod complete still boxed (last few available)

Boxford pedestal drill

Harrison M250 lathe complete with 3 and 4 jaw chucks, extra gears, with the high 2000rpm top speed almost as new

Eclipse De-magnetisers

Viceroy vertical milling machine, 30 INT head + 34" x 8" powered table

Viceroy pedestal buffing machine

Small tooling! at 'Home & Workshop Machinery'

Rapidor 6" hacksaw

Lorch precision lathe complete with collets

Q & S 6" Terrier sawmaster hacksaw, very late machine just off the truck

Myford Super 7B precision (gearbox) screwcutting lathe + power crossfeed, cabinet stand, drip tray & blocks and rare Hardened Bed

Crompton Parkinson Motors NEW 3/4HP ideal for Myford & Boxfords etc.

Myford ML7R 3 ½" x 19" + clutch / lever tailstock

Harrison M300 lathe complete gearbox, power feeds and Dickson tooling just in!

Raglan 5"x24" lathe complete with gearbox, variable speed & power cross feed

Tom Senior ELT Universal swivel variable power feed 36"x8" model complete with knuckle head

Norton DB No.6 deep Throat flypress & stand and balls in very nice order

PLEASE PHONE 020 8300 9070 TO CHECK AVAILABILITY OR TO OBTAIN OUR LIST

DISTANCE NO PROBLEM!! DEFINITELY WORTH A VISIT ALL PRICES EXCLUSIVE OF V.A.T.

We also have a massive range of small tooling far too much to list!!

Just A Small Selection Of Our Current Stock Photographed!!

Chester UK Ltd

DB8 Lathe

Features
Vee Bedway
Wide Speed Range
Adjustable Slideways
Cast Iron Construction
Hardened and Ground Bedways

Specifications

Centre Height	105mm
Distance Between Centres	400mm
Dimensions	860x548x360mm
Net Weight	125kgs

Standard Accessories
3-Jaw Chuck, 4-Way Toolpost, Lathe Tools, MT3 & MT2 Steel Centres, Manual & Parts List, Chuck Guard, Change Gears, Fixed Steady, Travelling Steady, 4-Jaw Chuck, Face Plate, Machine Stand & Tray.

SPECIAL OFFER!!!

All this for just **£575.00**

inc VAT & delivery Save £124!!!
(offer ends 24th December 2005).

Commodore Mill

Features
Taper Roller Bearing Spindle
Dovetail Column
Adjustable Gib Strips
Quill Fine Feed
Head Tilt +/- 90°
Geared Head

Specifications

Max Drilling Capacity	20mm
Max End Milling Capacity	16mm
Max Face Milling Capacity	63mm
Table Size	500x180mm
Motor	500W
Net Weight	103kg

Standard Accessories
Drawbar, Manual, Drill Chuck & Arbor, Variable Speed.

SPECIAL OFFER!!! £750.00

Inc VAT & delivery SAVE £125!!!
(offer ends 24th December 2005).

H110 Bandsaw

Specifications

Max: Cutting Capacity @ 90°	Round 110mm
	Square 100x150mm
Max: Cutting Capacity @ 45°	Round 100mm
	Square 85x65mm
Blade Speed	20,30,50m/min
Motor	550w
Power	240v
Blade Size	1640x0.65x13mm
Packing Size	965x410x500mm

SPECIAL OFFER!!! £135.00

inc VAT & delivery SAVE!!! £15 (offer ends 24th December)

"Happy Christmas from everyone at Chester UK"

FREE DELIVERY

UK Mainland Only

TEL NATIONAL: 01244 531631 INTERNATIONAL +44 (1244) 531631
FAX NATIONAL: 01244 531331 INTERNATIONAL +44 (1244) 531331
EMAIL sales@chesteruk.net WEB www.chesteruk.net
CHESTER UK LTD
CLWYD CLOSE | HAWARDEN INDUSTRIAL PARK | HAWARDEN | CHESTER | CH5 3PZ