MODEL ENGINEER

Vol. 194 No. 4242

4th - 17th March 2005

TAUNTON MODEL ENGINEERS EXHIBITION

HEATHFIELD COMMUNITY SCHOOL

2-3 APRIL

FLEXIBLE SHAFT EQUIPMENT

Workshop flexibility

SOUTHERN FEDERATION RALLY

Autumn fun at Maidstone

STUART TRIPLE MARINE ENGINE

Improvements & Modifications

VOL 194 NO 4242 £2.50

74th MODEL ENGINEER EXHIBITION

Engineering classes: Competition reports

WARCO

ANOTHER FIRST FOR WARCO

WARCO ARE PROUD TO INTRODUCE A NEW RANGE OF VARIABLE SPEED LATHES AND MILLING MACHINES.

- Exclusive to Warco • The right speed every time
- Low speeds for precise threading and boring operations
- Five different specifications available • Amazing value for money

WARCO – CONTINUING TO RESPOND TO CUSTOMER DEMAND

WM–180

New

3" CENTRE HEIGHT
12" BETWEEN CENTRES
SPEED RANGE 0 – 3,000 RPM
£499.00

WM–210 VARIABLE SPEED LATHE

4" CENTRE HEIGHT
13" BETWEEN CENTRES
SPEED RANGE 0 – 2,500 RPM
£699.00

New

ALL PRICES INCLUDE DELIVERY UK MAINLAND

FEATURES

- HARDENED AND GROUND BEDWAYS
- TAPER ROLLER SPINDLE BEARINGS
- OFF SET TAIL STOCK FACILITY
- A CHOICE OF METRIC OR IMPERIAL LEADSCREWS/DIALS
- ALL CUT METRIC AND IMPERIAL THREADS

EACH LATHE IS EQUIPPED WITH:

- 3 JAW SELF CENTRE CHUCK WITH INSIDE AND OUTSIDE JAWS
- 4 JAW INDEPENDENT CHUCK
- FIXED AND TRAVELLING STEADIES
- FACE PLATE FOUR WAY TOOL POST DEAD CENTRES

WM–250 VARIABLE SPEED LATHE

New

5" CENTRE HEIGHT
22" BETWEEN CENTRES
SPEED RANGE 0 –2,000 RPM
£999.00

WM–280 VARIABLE SPEED LATHE

New

5" CENTRE HEIGHT
27" BETWEEN CENTRES
SPEED RANGE 0 – 2,500 RPM
£1,399.00

WM–16 VARIABLE SPEED MILL

New

TABLE SIZE 20" X 7"
2 MT
TILTING HEAD
SPEEDS 0 –3,000
£998.00

QUALITY WARCO ASSURED

30 years in the making WARCO

Warco, Fisher Lane, Chiddingfold, Surrey GU8 4TD Fax: 01428 685812
Tel: 01428 682929 warco@warco.co.uk **www.warco.co.uk**

Model Engineer is published by
HIGHBURY LEISURE Publishing Limited
Berwick House, 8-10 Knoll Rise, Orpington, Kent BR6 0PS
Tel: 01689-887200 Fax: 01689-886666
www.hhc.co.uk/modeng
HIGHBURY LEISURE Publishing Limited, a
HIGHBURY HOUSE COMMUNICATIONS PLC
COMPANY

EDITORIAL

Technical Editor
Neil Read (01604-833670)
Production Editor
Kelvin Barber (01525-850938)
Club News Editor
Malcolm Stride
Technical Consultants
Mike Chrisp
John Haining, Stan Bray,
J. Malcolm Wild FBHI,
D. A. G. Brown
Editorial Administrator
Sarah Mead (01689-886677)

PRODUCTION

Design
Carol Philpott
Production Manager
Colin Blake
Printed by
Polestar (Colchester)
Origination by
Atelier Data Services

SALES & MARKETING

Group Sales Manager
Colin Taylor (01689-886649)
Sales Manager
Tony Robertson (01689-886650)
Subscription Marketing Executive
Voula Browne (01689-887209)

CIRCULATION

Circulation Director
Andy Bone (01689-887244)
Non-newstrade Distribution
Mike Reynolds-Jones
(0121-788-3112)

MANAGEMENT

Publisher
Jez Walters
Divisional Publisher
Dawn Frosdick-Hopley

SUBSCRIPTIONS & BACK ISSUES

Direct Subscriptions and Back Issues are available from
HIGHBURY LEISURE Subscription Services, Link House,
8 Bartholomew's Walk, Ely, Cambs CB7 4ZD
Phone: 01353 654429; Fax: 01353 654400
Email: leisure@hhdf.co.uk
Rates for 26 issues (annual):
UK: £65.00
Europe: £80.00
US Airmail: $130.00
RoW Airmail: £86.00
Cheques payable to Highbury Nexus Special Interests Ltd.
Second class postage paid at Rahway NJ USA.
Postmaster, please send address corrections to
Model Engineer c/o Mercury Airfreight International Inc,
2323 Randolph Avenue, Avenue 1, NJ 07001. Usps 0011099.
US Subscription Agent: Wise Owl Worldwide Publications,
5150 Candlewood Street, Suite #1
Lakewood, CA 90712-1900, USA
Phone: 562-461-7574; Fax: 562-461-7212.
Email: info@wiseowlmagazines.com
Website: www.wiseowlmagazines.com
Visa/MC/Discover accepted.
Canadian Distribution by Gordon & Gotch Periodicals
(Toll free 1-800-438-5005).
Model Engineer is published fortnightly.

© HIGHBURY LEISURE Publishing Limited 2005
All rights reserved
ISSN 0026-7325

The Publisher's written consent must be obtained before any part of this publication may be reproducedin any form whatsoever, including photocopiers, and information retrieval systems.

All reasonable care is taken in the preparation of the magazine contents, but the publishers cannot be held legally responsible for errors in the contents of this magazine or for any loss however arising from such errors, including loss resulting from negligence of our staff. Reliance placed upon the contents of this magazine is at readers' own risk.

IN THIS ISSUE

● Vol. 194 No. 4242 4 MARCH 2005 ●

SMOKE RINGS
Editorial news, views and comment.
PAGE 249

POST BAG
Letters to the Editors.
PAGE 250

THE 74th MODEL ENGINEER EXHIBITION COMPETITION REPORTS
Our judges report on the engineering entries, Classes A1 to A4.
PAGE 252

MAKING SPECIAL WASHERS
A quickly made tool for those times when you need to make a washer with a concave or convex face.
PAGE 255

RE-CASING A FRENCH CLOCK MOVEMENT
It is time to fit the restored movement into its new case. Part IV.
PAGE 256

FAIRBAIRN'S COLUMN ENGINE
Further work on the piston rod cross head before moving on to other components for this engine. Part VII.
PAGE 259

FLEXIBLE SHAFT EQUIPMENT
Useful for those delicate jobs, a small hand piece you can make for yourself.
PAGE 262

PENRHOS GRANGE
Further work on this superb GWR loco plus some observations about the recent event in Sinsheim. Part XV.
PAGE 265

OF BALDWINS AND SHAYS
A report on some loco building activities in South Africa.
PAGE 268

A MODEL VOLKSWAGEN ENGINE
More details of the model of this four-cylinder, I/C engine. Part II.
PAGE 269

ROAD STEAM: SAVAGE'S UNIVERSAL CARRIER
More variations on the wheel theme for this fine wagon. Part VII.
PAGE 272

On the cover ...

Mr. David White's 1:8 scale model of the Savory/Garrett ploughing engine of 1864. This model was awarded a Gold Medal and the Aveling Barford Trophy at the recent Model Engineer Exhibition. A number of engineers were attempting to mechanise ploughing during the 19th century. Savory & Son of Gloucester were very early in this branch of engineering and, in 1861, patented their two-engine system. A pair of these engines were built by Garretts of Leiston and Mr. White's model represents one of those built. For the judges reports on classes A1 to A4 of the competition turn to page 252 of this issue.

(Photograph by Neil Read)

SOUTHERN FEDERATION AUTUMN RALLY 2004
A look back to a fun event hosted by Maidstone MES during their 75th Anniversary year.
PAGE 276

SOME THOUGHTS ON THE STUART TRIPLE
How one contributor customised his version of this perennial favourite.
PAGE 278

I.C. ENGINE DESIGN
Notes on and photographs of some unusual full size I/C engine applications.
PAGE 280

PETE'S PAGE: A FABRICATED LEVER BENCH PRESS
Stop using your bench vice or drilling machine for press work. Why not make a proper tool for the job?
PAGE 282

CLUB CHAT & CLUB DIARY
Recent activities and forthcoming events.
PAGE 284

TURN TO PAGE 248 FOR GREAT OFFERS ON SUBSCRIPTIONS

INDEX to ADVERTISERS

Chester	296	Model Eng. Services	286
Chronos	247	Parkside Railways	240
Compass House Tools	240	Phoenix Locomotives Ltd	243/245
Cotswold Heritage	246	Polly Models	246
Engineers Tool Room	243	Reeves 2000	241
G+M Tools	244	Steam and Diesel Castings	243
Hemingway Kits	240	Rotagrip	240/243/246/294
Home & Workshop	295	Stuart Models/Jones and Bradburn	242
HY4 Products Ltd	294	Tracy Tools Ltd	294
Live Steam Models	240	Warco MKII new advert	238
Maxitrak	286	Classified	288-293

www.compass-house.co.uk

Ready to Run*
DOCK SHUNTER
5" Gauge From £895.00
7¼" Gauge From £1495.00
*Requires two 12 volt batteries (Not included)

Phone 01892 852968

5C Collet Chuck Key Operated

Recess Mount	£105
Camlock D1-3	£161

5C Collets

Round	1/8 - 1.1/16in x 64ths	£6.00
	3 - 26mm x 1mm	£6.00
Hex	1/8 - 7/8in x 16ths	£8.00
Sq	1/8 - 3/4 x 16ths	£8.20

5C Collet Sets

1/8 - 1in x 1/8ths (8pc)	£36.00
1/8 x 1.1/16 x 16ths (17pc)	£68.00
1/8 x 1.1/16 x 32ths (31pc)	£102.00
1/8 x 1.1/16 x 64ths (64pc)	£204.00
3 - 26mm x 1mm (24pc)	£90.00

ER Collet Chucks

Spanner Included

2MT ER16	3/8" Whit / M10	£44
2MT ER20	3/8" Whit / M10	£44
2MT ER25	3/8" Whit / M10	£44
3MT ER20	3/8" Whit / M10	£44
3MT ER25	3/8" Whit / M10	£44
3MT ER32	3/8" /1/2" Whit	£44
R8 ER16	7/16" UNF	£49
R8 ER32	7/16" UNF	£49
30Int ER16	1/2" Whit / M12	£59
30Int ER32	1/2" Whit / M12	£59

ER Collets

ER11	0.5 - 7 x .5mm	£6.00
ER16	1 - 10 x 1mm	£6.00
ER20	1 - 13mm x 1mm	£6.00
ER25	1 - 16mm x 1mm	£7.00
ER32	3 - 20mm x 1mm	£7.00

ER Collet Sets

ER11	0.5 - 7mm (13pc)	£65.00
ER16	1 - 10mm (9pc)	£45.00
ER20	1 - 13mm (12pc)	£60.00
ER25	1 - 16mm (15pc)	£75.00
ER32	3 - 20mm (18pc)	£90.00

3C Collets

1/16 - 1/2in x 16ths	£8.50
1 - 12mm x 1mm	£8.50

3C Collet Set

1/16 - 1/2in x 16ths (8pc)	£60.00
1 - 12mm x 1mm (12pc)	£90.00

R8 Collets

1/4, 3/8, 1/2, 5/8 & 3/4in	£6.50
6, 10, 12, 16 & 20mm	£6.50
10 Piece Set	£50.00

This is just a small selection of collets & collet chucks available. Please phone for details.

Send s.a.e. for full details on any of the above

All prices subject to the addition of carriage & V.A.T.

Rotagrip Ltd
16-20 Lodge Road, Hockley, Birmingham B18 5PN
Tel 0845 100 1566 Fax 0845 100 9188

LIVE STEAM MODELS LTD
DRAWING, CASTINGS OR MACHINED CASTINGS FOR A POPULAR RANGE OF TRACTION ENGINES

* 3" MARSHALL 'S' TYPE TRACTOR
* 3" MARSHALL 'S' TYPE ROAD ROLLER
4" RUSTON PROCTOR TRACTOR
* 3" FOSTER AGRICULTURAL ENGINE
* 4" FOSTER AGRICULTURAL ENGINE (ILLUSTRATED ABOVE)
4" BURRELL SINGLE CYLINDER
4" BURRELL SINGLE CRANK COMPOUND
6" RUSTON PROCTOR TRACTOR

*INDICATES THAT DRAWINGS FOR THESE ENGINES ARE ALSO AVAILABLE IN METRIC FORMAT

FULL ENGINEERING SERVICES AND TECHNICAL SUPPORT AVAILABLE. FINISHED AND TESTED BOILER. HORN PLATES, TENDER SIDES AND SPOKES ALL LASER-CUT. FULL WHEEL BUILDING SERVICE INCLUDING VULCANISED RUBBER TYRES. MACHINED PARTS, GEAR CUTTING, CRANKSHAFTS, OIL PUMPS AND ACCESSORIES INCLUDING WHISTLES, LAMPS AND FIRING IRONS.

PLEASE SEND £3.50 (CREDIT CARD £4) FOR FULL CATALOGUE AND PRICE LISTS TO: LIVE STEAM MODELS LTD, DEPARTMENT ME, UNIT 7, OLD HALL MILLS, LITTLE EATON, DERBY DE21 5DN.
TEL: (01332) 830811 FAX: (01332) 830050
E-Mail: livesteammodels@zetnet.co.uk Web site: www.livesteammodels.co.uk

12 & 24V MOTORS AND SPEED CONTROLLERS
SPROCKETS AND CHAIN . GEARS
SPEEDO'S . AMMETERS . BATTERY CHARGERS
PNEUMATICS INCLUDING VACUUM/PRESSURE PUMP
BATTERY CARE PRODUCTS . SPRINGS . BEARINGS
WHEEL BLANKS . SIGNALS . FUSES .LED'S .SWITCHES

TEL:0870 9089373 (national rate) FAX:01282 613647
EMAIL: pselectronics@btinternet.com FOR YOUR FREE LIST

PARKSIDE RAILWAYS
UNIT 2e & 3J, VALLEY MILLS, SOUTHFIELD ST.
NELSON. LANCS. BB9 0LD

Hemingway Kits, 126 Dunval Road, Bridgnorth, Shropshire WV16 4LZ, UK
WORKSHOP ACCESSORY KITS
Tel/Fax +44 (0)1746 767739 Email: kirk@hemingwaykits.fsnet.co.uk
Website: hemingwaykits.com

SPHERICAL TURNING TOOL

Favoured by both Mr. G.H. Thomas & Mr. J.A. Radford, this 'All steel' design has porous bronze bushes & thrust washers. Capacity of 2" internal and external spheres & radii, accurate to 0.001". Suitable for 3" to 6" centre height lathes

Kit includes steel, bushes, fasteners, ¼" dia tool, drawing & instructions

BUILD YOUR OWN £41.82 (UK P&P £6.25)

We are BACK! - Largest range of classic designs now with unrivaled Stocks and Service

Send £2 (refundable) for our latest Workshop Catalogue or visit our updated website

Hemingway

'The International Range'

REEVES MODEL ENGINEERS 2000

Exclusive to Reeves 2000, 'The International Range' of boiler fittings including,

Check Valves,
Blow Down Valves,
Globe Valves,
Sight Feed Lubricators,
Injectors,
Whistle Turrets,
Whistle Valves,
Chime Whistles,
Displacement Lubricators,
Blower Valves,
Water Control Valves,
Oil Check Valves

New Products Always Being Added

Visit the Shop That's Got the Lot!

REEVES MODEL ENGINEERS 2000

Castings,
Drawings,
Boiler Fittings,
Paint,
Transfers,
Drills,
Taps & Dies,
Bar Stock,
Rivets,
Bolts, Screws,
& Washers,
Spring Steel,
Brazing & Silver Solders
and much more.....

Reeves 2000, Appleby Hill
Austrey, Atherstone
Warks, CV9 3ER

9:00am- 4.30pm Monday - Friday
9:00am-12.30pm Saturday

Full Boiler and Flanged Plate Service Available.
Competitive Prices and Prompt Delivery
Boiler Kits Despatched within 7 days!

VISA MasterCard

The World's Largest Stockists of Model Engineering Supplies

REEVES MODEL ENGINEERS 2000

Drawings and Castings Currently Available

31 Stationary Engines

including....
Centaur Gas Engine
Lady Stephanie Beam Engine
Mary Beam Engine
Nicholas Vertical Engine
Triple Expansion Marine Engine
Trojan Vertical Engine
Vulcan Beam Engine
Warrior 2 Vertical Engine....

52 'Up to 3½" Locomotives'

including....
0-4-0 Juliet Tank Loco
0-4-0 Tich Tank Loco
0-4-0 Hunslette Tank Loco
0-6-0 Rob Roy Caledonian Loco
2-6-2 Firefly G.W.R. Loco
0-8-0 Caribou Canadian International Loco
4-4-0 Virginia Early American Tender Loco
4-6-2 Britannia Class 7 BR Pacific Loco....

34 7¼" Locomotives

including....
0-4-0 Dolgoch Tank Loco
0-4-0 Elidir Tank Loco
0-4-0 Romulus Tank Loco
0-4-2 Tom Rolt Tank Loco
0-6-0 Holmside Tank Loco
0-6-0 Paddington Tank Loco
4-4-2 Lorna Doone Loco
4-6-0 King George V Loco....

13 Road Going Vehicles

including....
1" SC Minnie Convertible Engine
1.5" SC Allchin Traction Engine
1.5" SC Marshall Portable Engine
2" SC Clayton Waggon
2" SC Lincolnshire Lad Traction Engine
2" SC Thetford Town Traction Engine
3" SC Foden Waggon
4" SC Foden Timber Tractor....

62 5" Locomotives

including....
0-4-0 Ajax Tank Loco
0-4-0 Dolgoch Tank Loco
0-6-0 Jack Tank Loco
2-4-0 Asia "Europa" Class Loco
4-2-2 Stirling Single Tender Loco
4-4-0 Maid of Kent Tender Loco
4-4-0 Washington Tender Loco
4-6-0 King's Own Tender Loco....

Workshop Equipment

including....
Clock Depthing Tool
Geared Rotary & Indexing Table
George Thomas Tapping & Staking Tool
Lathe Backplates & Frontplates
Light Duty Compound Table
Reeves Sensitive Mini Drill
Sparey Tailstock Turret
Versatile Dividing Head....

For full product listings, please see our website

Trade Counter Now Fully Stocked and Open to Callers - ALL WELCOME

Reeves 2000
Appleby Hill
Austrey
Atherstone
Warks CV9 3ER

9:00am-4.30pm Monday - Friday
9:00am-12.30pm Saturday

Tel: 01827 830894
Fax: 01827 830631

sales@ajreeves.com
http://www.ajreeves.com

25th Edition Catalogue

UK: £7.00 inc p&p
Europe: £8.00 inc p&p
Rest of World: £12.00 inc p&p
New Price List: 4 x 1st Class Stamps

• Stationary Engines
• Materials
• Boilers

Founded 1906 by Mr Stuart Turner

• Marine Engines
• Steam Fittings
• Fixings

STUART MODELS

All New Catalogue

2003-2005

The all new Stuart Models catalogue is now available. The new full colour catalogue features many new models, available as Sets of Castings, Machined Kits and Ready to Run Models.

Please send £5.00 for our **New Catalogue**

Burrell
3 inch & 4 ½ inch

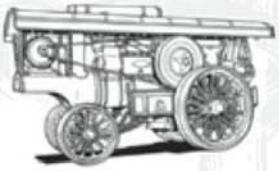

Fowler
2 inch, 3 inch & 4 inch

Please send £2.50 for the

PLASTOW

Traction Engines Catalogue

Wallis & Steevens
3 inch & 4 ½ inch

STUART MODELS

• Dept. ME, Braye Road, Vale, Guernsey, UK, GY3 5XA •
• Tel 01481 242041 • Fax 01481 247912 • www.stuartmodels.com •

Phoenix Locomotives Ltd

Class 52 Western and Class 50 Hoover in 5" Gauge

- Battery Electric
- Ready built or semi-built
- Highly Detailed interior and exterior
- Available as full loco or parts and components

Body mouldings and some parts for the following locos:

- Class 42 Warship (7¼"G)
- DB V221 (7¼"G)
- EMD F7 (5" and 7¼"G).

www.phoenixlocos.com 01704 546 957

DETAIL in DESIGN

Loco featured from the Dan Jeavons range:

CLASS 40 WHISTLER

Drawings, castings, fibreglass mouldings, motors and electronic control systems available for the following 5" Gauge locos:

- Class 10*
- Class 20 (Chopper)
- Class 35 (Hymek)
- Class 37
- Class 40* (Whistler)
- Class 45 (Peak)
- Class 47
- Class 52 (Western)
- Class 55 (Deltic)
- De-Winton (Puffin)
- Planet Diesel*
- Metropolitan*
- Dock Shunter
- Mk I Coach
- Mk II Coach
- 10 Ton Wagon*
- Driving Trolley

* Available in 5" & 7¼" Gauge

STEAM & DIESEL CASTINGS

TEL 01562 754530

For details send 9 x 4, 1st Class S.A.E. to: Completely built locos, pre-machined kits, castings or drawings supplied

Steam & Diesel Castings, 59 The Foxholes, Kidderminster, Worcestershire DY10 2QR

Vertex Rotary Tables

4in	HV4	£92
6in	HV6	£98
8in	HV8	£153
10in	HV10	£189

Vertex Bridgeport Right Angle Attachment

VRA-RA £227

Vertex 3 Way Machine

3 x 3.5in	VW3	£133
4 x 4in	VW4	£157

Vertex Tilting Rotary Tables

4in	VU100	£188
6in	VU160	£218

Vertex Rapid Indexers

4in	VSI-4	£123
5in	VSI-5	£135

Vertex Swivel Base Machine Vice

4 x 2.5in	VK4	£48
5 x 3.5in	VK5	£60

Vertex Dividing Head

4in Centre Height

BS-0	£163

Vertex Compound Tables

VCT-514/820

VCT-407

Table Size mm	Stroke mm		
185 x 100	50 x 80	VCT-407	£262
350 x 150	150 x 175	VCT-514	£340
500 x 200	200 x 250	VCT-820	£474

Send s.a.e. for full details on any of the above

All prices subject to the addition of carriage & V.A.T.

Rotagrip Ltd

16-20 Lodge Road, Hockley, Birmingham B18 5PN

Tel 0845 100 1566 Fax 0845 100 9188

LARGE MACHINES INSTALLED FREE

Bench & Floor Mounted Pillar Drills

0.45 hp motor
12 speeds
210-2220 rpm
80mm Spindle Travel
MT2 Spindle Taper
Base 340 x 210mm

FROM ONLY £119.95

BMD-25 Mill/Drill

25mm Max Drilling, 25mm Max End Milling & 50mm Face Milling

EQUIPPED WITH
Drill Chuck with Arbour, Milling Vice, Draw Bar, Taper Drift & Hand tools. Stand optional.

FREE COLLET SET

SWIVEL HEAD CONVERSION AVAILABLE - £129.50

ONLY £949 DELIVERED

BL9/20 & BL11/26 Lathe

FROM ONLY £600.00

FULLY EQUIPPED
Tray, Splash Back, 3 & 4 Jaw Chucks, Face Plate, MT3 & MT2 Dead Centres, Fixed & Traveling Steadies, Drill Chuck with Arbour, Spanner, Allen Key, Oil Can, Tool Box, Chuck Guard and Manual.

BMD-45/80G Milling Machine

800 x 240mm Table Size
585mm Longitudinal Travel
205mm Cross Travel
80-1250 rpm
MT3 Spindle
130mm Spindle travel
Swivel Head

FREE ACCESSORIES
Collet Chuck, Vice, Face Milling Cutter, Drill Chuck

ONLY £1150

BL12/24 Gap Lathe

£1500 DELIVERED

FULLY EQUIPPED
Stand, Splash Guards, Fixed Centres, Revolving Centre, 3 & 4 Jaw Chucks, Face Plate, 4 Way Tool Post, Fixed & Traveling Steadies, Lo Volt Light, Manual, Tools & Tool Box.

VTM Milling Machine

40mm Max Drilling
32mm Max End Milling
80mm Max Face Milling
660 x 155mm Table Size
360mm Longitudinal Travel
150mm Cross Travel
One Shot Lubrication System, Low volt Lighting, Machine Stand with Locker as standard.

POWER FEED FITTED FREE

£1450 WITH FREE POWER FEED TO TABLE

ALL ACCESSORIES FITTED FREE

The first choice for the true model engineer!

All these machine tools are exclusively supplied by Engineers Tool Room and offer superb value for money and unrivaled quality & reliability.

Unit 28
Enterprise Centre
Llwynypia Road
Tonypandy
Rhondda
CF40 3ET
Tel: 01443 442651
Fax:01443 435726
Mobile: 07770 988840
www.engineerstoolroom.co.uk

The Engineers Tool Room

Contact us for details of complete range or Free Tool Catalogue

gandmtools

selection from our current stock, have a look at our new website, now with hundreds of photos and changing every day

web: www.gandmtools.co.uk **email: sales@gandmtools.co.uk**

Boxford bed mounting lever op cut off slide, **£250.00 plus vat.**

Diatest precision hole gauge set, range 1.5mm - 4.3mm, **£175.00 plus vat.**

Elliott 4" dividing head and tailstock, 2 division plates,excellent condition, **£325.00 plus vat.**

6" x 4" heavy duty swivel angle plate, **£55.00 plus vat.**

Moore & Wright 0-75mm depth micrometer, cased, very good condition, **£25.00 plus vat.**

Elliott 4" dividing head and tailstock, slight damage to head, 2 division plates, **£150.00 plus vat.**

Boxford 5" model BUD centre lathe, 5" x 22" between centres, single phase, well tooled, **£1650.00 plus vat.**

Raglan 81/2" faceplate, **£45.00 plus vat.**

Cavallin bench silversmiths/ jewellers rolls, good condition, **£325.00 plus vat.**

Mercer 0 - 1" Micrometer, As New, **£15.00 plus vat.**

Mitutoyo 500-321 water resistant digital caliper, as new, **£100.00 plus vat.**

Myford vertival swivelling slide, almost unused, **£235.00 plus vat.**

Anilam Micro Wizard 2 axis digital read out, used, **£210.00 plus vat.**

Emco FB-2 vertical milling machine with rotary dividing table, power feed, stand, chuck etc, good condition, **£1875.00 plus vat.**

Hilger & Watts 8" precision box level with case, **£250.00 plus vat.**

Maximat Super 11 centre lathe,chuck, quick change toolpost, manual, stand, 3 phase, very good condition, choice of 4 machines, **£2100.00 plus vat.**

Myford ML7R centre lathe, stand, 3 and 4 jaw chucks,toolpost, single phase, **£875.00 plus vat.**

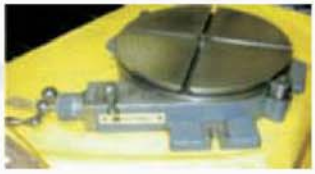

Taylor Hobson 12" rotary table, very good condition, **£350.00**

Myford Super 7 bench lathe, 31 /2" x 19", 3 jaw chuck, tray and blocks, toolpost, gears, single phase, good condition, **£1000.00 plus vat.**

Opening times Monday–Friday 9am–1pm & 2pm–5pm. Saturdays 9am–1pm only

G AND M TOOLS, THE MILL, MILL LANE, ASHINGTON, WEST SUSSEX, RH20 3BX

emails: sales@gandmtools.co.uk web: www.gandmtools.co.uk

Telephone 01903 892510 fax 01903 892221

PHOENIX LOCOMOTIVES LTD

would like to invite you to...

DRIVE YOUR OWN CLASS 50

- 5-inch Gauge
- Nearly 6 feet long
- Step-by-step build to be featured in RAIL EXPRESS Modeller magazine
- 'Buy as you build' scheme for readers
- No specialist skills or tools required (if you can build in 4mm scale, you can build this!)
- Many examples of our drive-train running nationwide
- For your information pack and to reserve your kit, contact us now

PHOENIX

LOCOMOTIVES LIMITED

1 Colchester Road, Southport, Merseyside PR8 6XJ
Mainline: 01704 546957 Mobile: 07973 207014
E-mail: keith@phoenixlocos.com Website: www.phoenixlocos.com

ORDER NOW...

Step-by-step build starts on opposite page

External Turning Tool Style STACR

Size	Insert	Price	Insert
8 x 8 x 100mm	TCMT090204	£17.50	£2.51
10 x 10 x 100mm	TCMT090204	£18.00	£2.51
12 x 12 x 100mm	TCMT110204	£18.50	£2.51

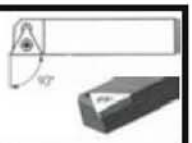

External Turning & Facing Tool Style SCLCR

Size	Insert	Price	Insert
8 x 8 x 100mm	CCMT060204	£17.50	£2.79
10 x 10 x 100mm	CCMT060204	£18.00	£2.79
12 x 12 x 100mm	CCMT09T304	£18.50	£3.39

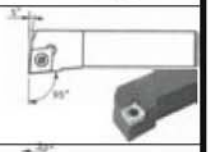

External Turning Tool Style SDJCR

Size	Insert	Price	Insert
8 x 8 x 100mm	DCMT070204	£17.50	£2.79
10 x 10 x 100mm	DCMT070204	£18.00	£2.79
12 x 12 x 100mm	DCMT11T304	£18.50	£3.42

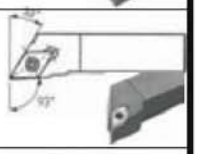

External Turning & Copying Tool Style SDNCN

Size	Insert	Price	Insert
8 x 8 x 100mm	DCMT070204	£17.50	£2.79
10 x 10 x 100mm	DCMT070204	£18.00	£2.79
12 x 12 x 100mm	DCMT11T304	£18.50	£3.42

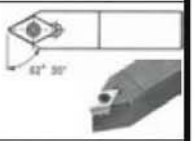

Boring Bar Style SCLC

Size	Insert	Price	Insert
8mm dia x 110mm	CCMT060204	£17.95	£2.79
10mm dia x 125mm	CCMT060204	£17.95	£2.79
12mm dia x 150mm	CCMT060204	£17.95	£2.79
16mm dia x 200mm	CCMT060204	£19.95	£2.79

Boring Bar Style STFC

Size	Insert	Price	Insert
8mm dia x 110mm	TCMT090204	£17.95	£2.51
10mm dia x 125mm	TCMT090204	£17.95	£2.51
12mm dia x 150mm	TCMT110204	£17.95	£2.51
16mm dia x 200mm	TCMT110204	£19.95	£2.51

All tools supplied with one insert

Please add 20% to cover postage & V.A.T.

Rotagrip Ltd

16-20 Lodge Road, Hockley, Birmingham B18 5PN
Tel 0845 100 1566 Fax 0845 100 9188

5" GAUGE

polly locomotives turning your dreams into reality...

www.pollymodelengineering.co.uk

If you have ever dreamed of building and driving your own steam engine then the range of POLLY LOCOMOTIVES is meant for you!

Polly Locomotives are freelance steam locomotives designed in a 19th century style. The kits are manufactured to a high standard and incorporate many traditional features that appeal to all enthusiasts from beginner to the committed club member, and can be driven for pleasure in the garden or club track. Depending on the model they will pull six to eight people providing pleasure for family and friends.

They are available in five different models-

- **Polly I** 0-4-0 Side Tank Locomotive (approx. 6 person capacity)
- **Polly II** 0-4-0 Tender Locomotive (approx. 6 person capacity)
- **Polly III** 0-6-0 Side Tank Locomotive (approx. 8 person capacity)
- **Polly IV** 0-6-0 Tender Locomotive (approx. 8 person capacity)
- **Polly V** 2-6-0 Side Tank Locomotive (approx 8 person capacity)
- **Passenger Driving Truck**

POLLY MODEL ENGINEERING

Please send £3 for new catalogue

Bridge Court
Bridge Street
Long Eaton
Nottingham
NG10 4QQ

The complete locomotives are supplied in kit form with assembly drawings and a full set of instructions. They are straightforward to build, but we will always be pleased to help with queries.

FOR FURTHER INFO ON THE POLLY MODELS RANGE

PHONE: 0115 973 6700

Polly Model Engineering Ltd.

REACH NEW HEIGHTS

ariel

A SUPERB ENTABLATURE STYLE STEAM ENGINE - FULL OF GOTHIC CHARM AND STANDING SOME 12" HIGH. ARIEL IS AVAILABLE FULLY FINISHED AND READY TO RUN OR IN MACHINED, PAINTED, TOOLS SUPPLIED, KIT FORM.

£358 INC. VAT (KIT FORM)
(UK DELIVERY £10)

CATALOGUES £5
(UK POST FREE)

Cotswold HERITAGE

Bird Industrial Park Long Marston
Stratford upon Avon Warks CV37 8RP
T 01789 721444
info@modelsteamenginesuk.com
www.modelsteamenginesuk.com

FM2162
Part 1

SEE US AT HARROGATE 6 - 8 MAY 2005!!

ChronoS
ENGINEERING SUPPLIES

PHONE FOR YOUR FREE 120 PAGE CATALOGUE 01582 471900

ORDER ONLINE AT WWW.CHRONOS.LTD.UK

CLARKE VARIABLE SPEED LATHE

259MM BTN CENTRES
SWING - 153MM
POWERFEED/SCREWCUTTING INC
MILLING ATTACHMENT AVAILABLE

£340

CLARKE 6 SPD LATHE C/W MILL HEAD

SPECIAL PACKAGES AVAILABLE

430MM BTN CENTRES
SWING - 305MM
POWERFEED/SCREWCUTTING INC
4 WAY TOOLPOST INC
SHOWN ON OPTIONAL STAND

£789 INC VAT

CLARKE 300M VARIABLE SPEED LATHE

300MM BTN CENTRES
SWING - 180MM
POWERFEED/SCREWCUTTING INC
DIGITAL READOUT KIT AVAILABLE SOON

£425

CLARKE MICRO MILL/DRILL

£282

DRILL CAP – 13MM
THROAT 140MM
SPEEDS 100-2000
TABLE-240X145
SPINDLE MT2

CLARKE 12 SPEED MILL/DRILL

£740

DRILL CAP – 24MM
SPEEDS 90-2150
TABLE-585X190
SPINDLE MT3
MOTOR-3/4HP

SHOBHA 6" ROTARY TABLE TAILSTOCK & DIV PLATE SET

4 SLOT MODEL
2MT CENTRE HOLE
DETAILED MANUAL Code XP1

Complete Set £139.00 inc VAT

SPECIAL OFFER!!

CODE	
TABLE ONLY -	£90.00
TABLE + DIV SET -	£110.00
TABLE + DIV SET + TAILSTOCK -	£139.00!!

WHILE STOCKS LAST!

VERTEX BSO DIVIDING HEAD!!

Code	PRICE	
XP17	~~£255.00~~	£194.00

VERTEX 6" & 8" ROTARY TABLES

Code	ITEM	PRICE	
XP8	HV6 TABLE	~~£155.00~~	£125.00
XP9	TSI TAILSTOCK	~~£68.00~~	£47.95
XP10	DPI DIV SET	~~£58.00~~	£37.95
XP11	HV8 TABLE	~~£235.00~~	£192.00
XP12	TS2 TAILSTOCK	~~£79.00~~	£58.00
XP13	DP2 DIV SET	~~£69.00~~	£52.00

NEW - MICRO MACHINING DVD S BY J F RODRIGUEZ EXCLUSIVE TO CHRONOS - SOLE UK DISTRIBUTOR

THE MILLING MACHINE & ITS USES
4 HOURS LONG. COVERS ALL ASPECTS OF MILLING
CODE DVD1 - **£34.95 INC**

GRINDING LATHE TOOL BITS AND OTHER THINGS
90 MINS. CODE DVD2 - **£26.95**

MICRO MACHINING ON THE TAIG/PEATOL LATHE
2 HOURS, INCLUDES FACING, TURNING, GROOVING, PARTING, CHAMFERING, DRILLING, TAPPING ETC ETC ON THIS POPULAR SMALL MACHINE, EXERCISES ARE APPLICABLE TO ALL SMALL LATHES
CODE DVD3 - **£26.95**

ADVANCED TAIG/PEATOL LATHE OPERATIONS
4 HOURS. SEE THE PEATOL LATHE PERFORM SOME OF THE MOST UNORTHODOX MACHINING TECHNIQUES THAT MOST THOUGHT WERE IMPOSSIBLE
CODE DVD4 - **£34.95**

THREADING ON THE LATHE
2 HOURS. FINALLY THE MYSTERY OF THREAD CUTTING HAS BEEN MADE SIMPLE ENOUGH FOR THE BEGINNER
CODE DVD5 - **£26.95**

MACHINING OPS ON THE 7X10 VARIABLE SPEED MINI LATHE
4 HOURS. THIS DVD IS ALL ABOUT THE 7X10 VARIABLE SPEED MINI LATHE CURRENTLY OFFERED UNDER VARIOUS BRAND NAMES INCLUDING THE CLARKE 300. IT IS VERY THOROUGH INCLUDING A FULL TOUR OF THE MACHINE AND SHOWS VIRTUALLY VERY BASIC MACHINING CUT A LATHE CAN DO. AN EXTREMELY INFORMATIVE PRESENTATION WHATEVER TYPE OF LATHE YOU HAVE.
CODE DVD6 - **£34.95**

MILLING WITHOUT A MILLING MACHINE
2 HOURS. LEARN HOW TO DO SUCCESSFUL MILLING WITHOUT A MILL - USING YOUR LATHE AND EVEN A DRILL PRESS.
CODE DVD7 - **£26.95**

MAKING GEARS THE EASY WAY
4 HOURS. THE SECRETS OF THE HOB REVEALED. HOW TO USE ONE AND EVEN HOW TO BUILD ONE FROM SCRATCH ON A SMALL - MEDIUM SIZED LATHE AND SMALL MILLING MACHINE
CODE DVD8 - **£34.95**

FURTHER DETAILS AT WWW.CHRONOS.LTD.UK OR ASK FOR OUR DVD LIST

VERTEX K TYPE MILLING VICES!!

Code	JAW WIDTH	PRICE	
CG6	4" (K4)	~~£79.80~~	£69.95!!
CG7	5" (K5)	~~£105.00~~	£79.95!!
CG8	6" (K6)	~~£131.00~~	£99.00!!

CHRONOS IMPORTED CHUCKS!!

3JAW SC

Code	TYPE	PRICE
XP72	80MM	£39.95
XP73	100MM	£49.95
XP74	125MM	£59.95

4JAW INDEPENDANT

Code	TYPE	PRICE
XP75	80MM	£49.95
XP76	100MM	£56.95
XP77	125MM	£64.95

GLANZE INDEXABLE BORING TOOLS C/W 3 TIPS

Code	SHANK	PRICE	
GZ6	6MM	~~£26.95~~	£16.95
GZ8	8MM	~~£26.95~~	£16.95
GZ10	10MM	~~£26.95~~	£16.95
GZ12	12MM	~~£29.95~~	£17.95
GZ16	16MM	~~£31.95~~	£18.95

2" BORING HEAD SET C/W TOOLS

ACCEPTS 1/2" TOOLS

Code	FITTING	PRICE
CG31	MT2	£69.50
CG32	MT3	£69.50
CG33	R8	£69.50

SET OF 9 TCT BORING TOOLS

Code	SHANK	PRICE
XP160	3/8	£12.00
XP161	1/2	£15.00
XP162	10MM	£12.00
XP163	12MM	£15.00

LITTLE HOGGER INDEXABLE ENDMILL SET

AS FEATURED IN MODEL ENGINEER WORKSHOP!!

CODE CG207 £29.95

SET OF 3 FLYCUTTERS WITH 1/2 SHANK

3 TOOLBITS INCLUDED!!

Code	PRICE	Price
CG187	~~£18.95~~	£15.00

5 PC QUICK CHANGE TOOLPOST SET

SUPERB QUALITY INCLUDES 2 STD HOLDERS, 1 BORING & 1 PARTING

Code	TO SUIT	
XP59	MYFORD ML	
~~£125.00~~		£95.00
XP60	BOXFORD 4 1/2	
~~£160.00~~		£125.00

SPARE HOLDERS FOR MYFORD & BOXFORD SYSTEMS

Code	TYPE	PRICE
XP61	MYFORD STD	£13.95
XP62	MYFORD EXTENDED	£19.95
XP63	BOXFORD STD	£17.95
XP64	BOXFORD EXTENDED	£24.95

SECURE ONLINE ORDERING AT WWW.CHRONOS.LTD.UK

PRICES INCLUDE VAT & CARRIAGE (UK MAINLAND)

CHRONOS LTD, UNIT 14 DUKEMINSTER TRADING ESTATE, CHURCH ST, DUNSTABLE, BEDS, LU5 4HU

PRICES ARE CORRECT AT TIME OF GOING TO PRESS AND ARE ONLY AVAILABLE WHILE STOCKS LAST
TEL (01582) 471900 – 5 LINES FAX (01582) 471920 WEBSITE WWW.CHRONOS.LTD.UK
EMAIL SALES@CHRONOS.LTD.UK

SUBSCRIPTION OFFER

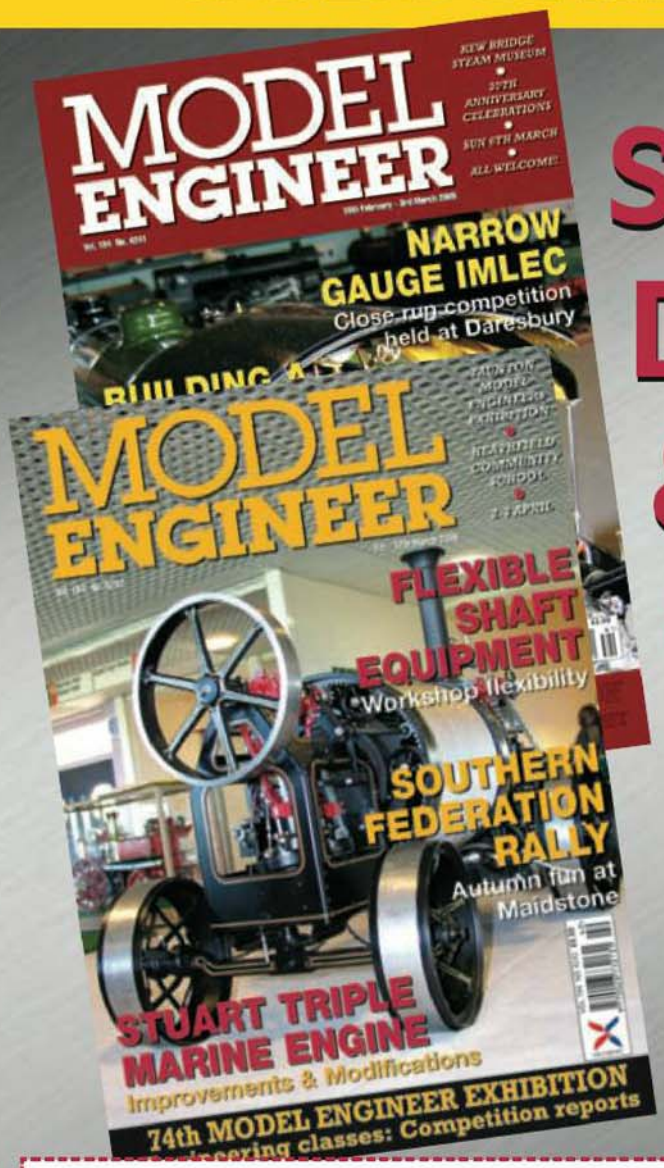

SUBSCRIBE BY DIRECT DEBIT & SAVE OVER 20%!

- **Subscribe NOW and save pounds on your annual subscription**
- **Free, home delivery**
- **Avoid price increases**

CHOICE ONE

☐ YES! I would like to subscribe to Model Engineer for £13 every 3 months (UK only) by Direct Debit. (Please fill out form opposite).

CHOICE TWO

YES I would like to subscribe to Model Engineer and save 15% with a one-off payment by

☐ Postal Order / Cheque ☐ Visa / Mastercard ☐ Switch ☐ AmEx

Issues	UK	Europe (inc. Eire)	US Airmail	RoW Airmail
26	☐ £55.25	☐ £68.00	☐ $110.50	☐ £73.10

Cardholder's name: .....

Card no ☐☐☐☐ ☐☐☐☐ ☐☐☐☐ ☐☐☐☐ ☐☐☐☐

Expiry date: ..... Switch Issue no/valid date: .....

Signed: ..... Date: .....

Title: ..... Initials: ..... Surname: .....

Address: .....

.....

.....

Postcode: ..... Country: .....

Tel: ..... E-mail: .....

Terms & conditions: Offer valid until 31st March 2005. Subscriptions will begin with the first available issue. Please allow 28 days for delivery of your first issue.

☐ Please tick this box if you do not wish to receive any further information from HHC Plc
☐ Please tick this box if you do not wish to receive any further information from third party companies selected by us

HIGHBURY

Instruction to your bank or building society to pay by Direct Debit

DIRECT Debit

1. Name and full postal address of your bank or building society

To: The bank/building society manager

Address

.....

.....

.....Postcode .....

2. Name(s) of account holder(s)

3. Branch sort code

4. Bank/building society account number

5. Instructions to your bank or building society.

Please pay Nexus Media Ltd. Direct debits from the account detailed in this instruction subject to the safeguards assured by the Direct Debit Guarantee. I understand that this instruction may remain with Nexus Media Ltd. and, if so, details will be passed electronically to my bank/building society.

Signature .....

Date .....

Originator's identification number

8 0 0 1 3 2

Reference number (official use only)

Banks and building societies may not accept direct debit instructions for some types of accounts.

Please allow 28 days for delivery of your first issue. We cannot accept responsibility for orders lost, delayed or damaged in the post. Details of the Direct Debit Guarantee are available on request

PLEASE RETURN YOUR COMPLETED COUPON TO:

Highbury Direct Fulfilment, Link House, 8 Bartholomews Walk, Ely, Cambs CB7 4ZD

US/CANADIAN SUBSCRIBERS - PLEASE RETURN YOUR COMPLETED COUPON TO:

Nexus Subscriptions, Wiseowl Worldwide Publications, 5150 Candlewood Street, Suite 1, Lakewood, CA 90712-1900 U.S.A. Tel: 562-461-7574 Fax: 562-461-7212 email: info@wiseowlmagazines.com

Offer Code ME0542DDP Offer Ends 31/03/05

Photocopies of this page are acceptable

SMOKE RINGS
With the Editors

Taunton Exhibition

Paul Norton - Exhibition Organiser, Taunton Model Engineers writes: *"Taunton Model Engineers have, for many years, held an exhibition every two years. The idea was that there would more likely to be 'fresh' exhibits after two years rather than repeatedly showing the same items every year. However, in the last ten years or so, the membership has doubled and a decision was taken in 2003 to carry out a major survey of exhibits available in the club. It was emphasised than not everything had to be of 'exhibition quality and finish'. It was thought that items that were less than perfect might promote those with no technical training to have a go. The results of the survey were astonishing - we had enough to put on three complete exhibitions without repeating anything, and that is without new items being produced by the members in the meantime or taking items from the members wider interests.*

So hot on the heels of our 2004 show, our next exhibition will be on Saturday 2nd and Sunday 3rd April 2005. The venue remains at Heathfield Community School, Monkton Heathfield, Taunton, Somerset and will be open from 10am until 4.30pm each day. We are again being supported by Reeves 2000, Tracy Tools, Model Engineering Products (Bexhill), Western Steam, and for the first time JB Cutting Tools. Other companies attending will be Dreweatt Neate (formally Honiton Gallies) and Cheddar Models. As well as the usual locomotives, traction engines, stationary and hot air engines, there will be various demonstrations and we are promised the attendance of other model engineering clubs and related organisations.

Admission is £1 for children 5-15 years, £3 for Senior Citizens and £4 for adults. For those organising a car-load of visitors, we are offering one free ticket for every three purchased in advance. To book, see our website www.tauntonme.org.uk or telephone 0870-991-5397. Payment may be made by cheque or by major credit/debit cards. Requests for advance tickets must be received by 21st March."

Norman Spink castings

Phil Owen of Blackgates Engineering advises: *"We are pleased to announce that Blackgates Engineering have now taken over the castings supply business of the late Norman Spink. Although it will take a little while to fully incorporate all of Norman's designs into the Blackgates range, we would like to take this opportunity to welcome Norman's former customers and assure them that we will continue to stock all the designs.*

A new catalogue is in the course of preparation and will be available sometime in March/April 2005. We will of course be following this up with advertisements in M.E. *just as soon as we are fully organised."*

We are sure we speak for all readers when we say that this is excellent news.

3½in. Gauge Rally

Alan Church of Bristol SMEE has written to say that on Sunday 8 May a 3½in. Gauge Rally is going to be held at the track site of the Bristol Society of Model and Experimental Engineers. The track site is at the Ashton Court Estate, Bristol.

All models engineers will be very welcome. Only 3½in. gauge locos will be allowed to run on the day, and builders with part built locos are most welcome to bring them along. Owners wishing to run will be required to bring a current boiler certificate with them. As this is an informal gathering there will be no trade stands in attendance, however there will be refreshments available. Also there will be a chance to discuss all topics relating to this gauge, which Alan personally feels has been sadly neglected over the past decade.

The track will be open at 10.30am to receive guests. Alan can be contacted at: **12 Fenbrook Close, Hambrook, Bristol BS16 1QJ; e-mail: alan.church3@btinternet.com**

Triple throw lathe

We have received a communication from Mr. Ed. Jay of Canada who is researching a triple throw lathe invented by a certain William Bunn Marshall (1849 to 1921). Mr. Marshall was apparently an engine fitter in H.M. Dockyard, Gillingham (circa 1880) and an engineer at the Wimshurst, Hollick & Co. crane factory, South Fambridge (circa 1900). He was previously employed at Paxmans/Britannia Lathe Co, Colchester and Garretts of Leiston. He is said to have written a book but the papers relating to the lathe and many of the books printed are feared lost in the blitz. Any information about this engineer and his machine would be gratefully received. Please contact **Mr. E. Jay, 181 Donovan Dr., Comox. B.C., Canada, V9M 2T1; e-mail: bluebird@mars.ark.com**

A demonstration underway at last year's exhibition organised by Taunton Model Engineers.

Tsunami Appeal

Martin Cook of the SMEE reports: *Those visitors, traders and stewards who attended the 74th Model Engineer Exhibition and contributed so generously to the impromtu collection made at this event will be pleased to know that the money collected amounted to £1,363.33 and this has now gone to relieve the suffering caused by this terrible disaster.*

The warmest thanks of the exhibition organisers and the editorial team go to all who gave time to organise the collection and who donated so generously to it.

M.E. postal address

All contributors and correspondents are urged to note that letters or material for the attention of the Editors should be sent to the Orpington office which now has responsibility for its distribution. With immediate effect the Hemel Hempstead PO Box number ceases to be operational. The Orpington office address appears at the top left hand corner of the contents page of each issue.

CHUCK, the MUDDLE ENGINEER — by B. TERRY ASPIN

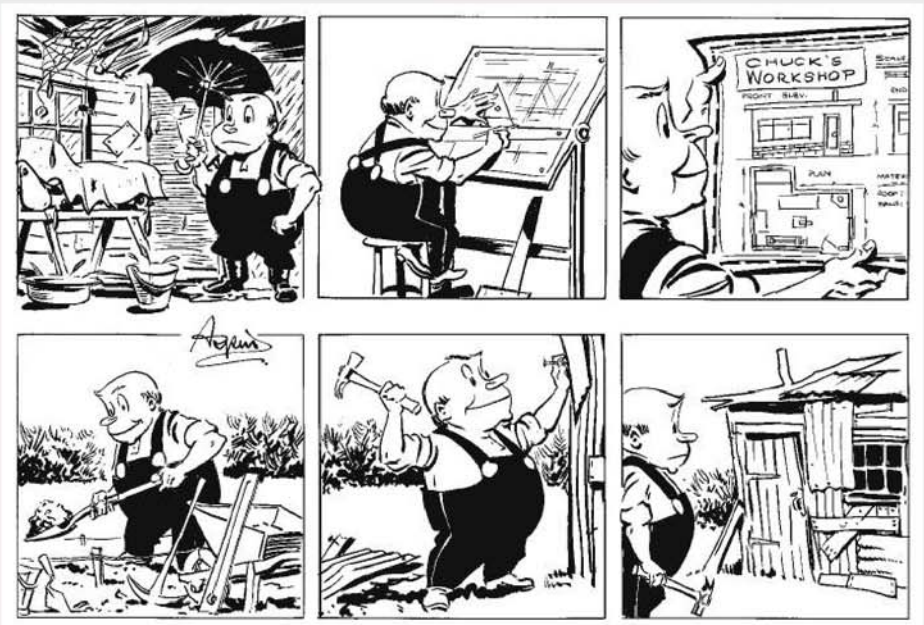

POST BAG

More on axleboxes - 1

SIRS, - Like Geoff Johnson (*M.E.* 4237, 24 December 2004) I was very taken with Neville Evans' design for needle roller bearing axleboxes and decided to fit them to my GT3 locomotive. The usual model suppliers did not seem to carry these bearings and eventually I got them from my local bearing stockist who could not apparently, source the double sealed units suggested.

The diameter of each bearing was two thou. over size so I bored for a slip fit and fixed them in the axleboxes with Loctite. What I believe I should have done is reamed the axleboxes to size and press-fitted the bearings, which would have closed them down slightly. I now have a pretty sloppy fit of the axle in the bearing, which could lead to slewing of the needles and subsequent failure. I though about hardening the axles but decided that the static load was well short of the bearing specification and a soft axle would not be a problem, indeed I used ordinary BMS, not even silver steel.

As regards lubrication, the bearings came pre-lubricated with an oil that looked to be about the same viscosity as motor oil. I have drilled down the centre of each axle and cross-drilled mid-way along the journal. I plan to squirt in some high-pressure oil such as that used in car differentials, from time to time.

I also liked the idea of plain axles, though I am not convinced that full-size locomotives all had plain axles. The plain axle makes machining rather easy but leads to an interesting problem when quartering, especially if you use Loctite to fix the wheels. Having 'Loctited' one wheel and put the axleboxes in place, I had to stand my quartering jig on its side and support the second wheel with three rods faced to exact back-to-back length. It looked a bit precarious but worked out just fine.

How have these axleboxes worked out in practice? Well, it's still early days really but after 12 kilometres of running, they seem to be perfectly okay. The chassis is certainly very free-rolling (the bogie also has needle rollers) and when out of gear, sets off happily down the slightest gradient. I am not too worried by the non-sealed form of the bearings since the gas-turbine provides a much cleaner working environment than a steam locomotive. Overall, I'd use Neville's axlebox design again, though I might press-fit the bearings next time round.

Tim Coles, Cambridgeshire.

More on axleboxes - 2

SIRS, - I was interested in Mr. Johnson's remarks about employing needle roller bearings in miniature locomotives (*M.E.* 4237, 24 December 2004). There is little doubt that these work, and work well, but as you noted in the follow-up comments there are ways and means of fitting them and that will be the determining point as to whether the promise is fulfilled. The drawn cup needle roller bearing (DCNR) will displace an existing bronze bearing possibly without change of dimensions in the axle box but that insists that the axle is the running surface. Within my own club environment I know of three 1in. scale locomotives fitted with DCNR bearings which have plain mild steel axles, One of these locomotives has run our inner circuit at over 20km/h, and all three put in hard work at running days. One had a wheel come loose and the opportunity was taken to look at the axle when refitting the wheel which showed no apparent damage at all, certainly no brinelling.

The bearing manufacturer's suggest that these bearings should be force fits as the casing is likely to be oval which pressing on the shaft will correct to become a true circle. I have just measured 45, 25 and a 12mm bore units and cannot detect any change of diameter on any of them. However, the axle and box, for our purposes a plain steel seating should be dimensioned to be about 0.025mm under size on the box bore so the bearing can be removed and the seating diameter made to size on size so all the needles are in contact with the seat. The area of contact is therefore very large, a half circle in effect, the actual loading on each roller is low as several would then be taking up the load. For a Speedy the load would be, possibly, under 10kg per bearing which compared to the book is very slight, coupled to which the manufacturers rate their bearings according to Fatigue Life which caters for highest speeds and loads over continuous year in and year out operations which we will never get close to. Making the seats for DCNR requires a high level of skill to get to the final diameter and produce a superb running surface, possibly best done by easing the final tenths of a thou. with a well worn strip of emery and lots of oil. The poor qualities of a DCNR are that it will not accept axial thrusts and locations are not always what they should be as a straight replacement for a bronze bush. Sealing of these bearings is not as good as with ball bearings and when pressed technical people at the manufacturers will admit so.

These matters can improved upon by changing the method of locating the bearing. If the bearing is pushed home against a shoulder close fitting to the axle to the inside of the frame and fitted with an O-ring at the wheel side such that it pokes out from the axle box about 0.25mm at most, then in service the ring will squash out initially to close on the bearing, then rapidly wear to a size where it still seals but also acts as the thrust race. This should reduce the incidence of wear and debris from wear, between wheel and box, which we all know will get into the bearings if unsealed to form a fine grinding paste. Grease rather than oil can be forced into the bearing through a central hole in the axle with the intersecting hole under the rollers being countersunk and dressed. The incoming grease will purge any old grease and muck from the bearing. The seal maker would not like this method at all but for us it works with consistently good results. I have some industrial experience in a very harsh environment with something very similar which was dismissed by my DO but does all that is required and has done for nigh on seven years, 365 days a year.

Of course there are other ways of putting low friction bearings into our products and the next step would be to work on the inner ring pushed over the axle seating and also consider the normal needle roller bearing, on 12mm shaft size the bearing would increase on outside diameter from 16 or 20mm to 21/22 for the inner ring on a DCNR, to 19/24 for the normal needle

Mild steel axleboxes with 3/4in. bore needle roller bearings, to Neville Evans' design. Note the substantial single flange. (see Tim Coles' letter above)

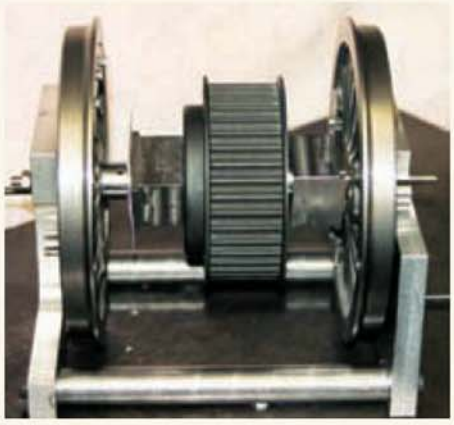

Driving wheels set up conventionally in the quartering jig. Note the oil hole in the axle to the left of the axlebox. The belt wheel takes drive from the rigidly-mounted layshaft, all 7bhp of it.

Driving wheels as set up for quartering on a plain axle. The masking tape prevents excess Loctite running down into the axlebox. Elastic bands hold the crankpins against the reference face of the jig.

roller type but some thought should be given to the single row ball bearing as this will accept axial thrusts, is properly sealed and does not need such tight tolerancing as both inner and outer diameters can be 0.025mm slack. The SR bearing for a 12mm shaft would normally be 28mm but the 618 series gives 21mm and do not follow the line that it will be unsuitable as it is only 5mm wide. What matters is the rating, massively oversized for our duties, and the method of location which needs the bearing to be clamped each side in the axle box to keep it steady and on a set vertical line. You could always use two. In this end of the world two SR bearings would be the same price as one needle roller bearing but you get much more.

I hope these notes will further more discussion as it is about time we model engineers made far more use of modern materials and methods in our work but at the same time we do not have to slavishly copy what is done industrially as we have very different service conditions. Fitness for purpose is what is required.

A. J. Aldridge, South Africa.

Dimension question

SIRS, - In *Club Chat* (*M.E.* 4238, 7 January 2005) your correspondent asks what is the shape of a three-sphere in four-dimensional space. The answer is that it is FLAT.

The reason is that, in the 4-D region in which it now exists, every one of its 3D points is equidistant from a 4-D origin. I don't know the name of these 4-D regions so I will call them CLEARES, since they will impose a restriction in four dimensions but then allow you to go anywhere you wish in three dimensions unhindered.

The way to arrive at this happy conclusion is to start with a 1-dimensional world i.e. a LINE. Choose any point you like as an origin and you will be able to move towards and away from this point as far as you like in each direction along the LINE but you will not be able to move sideways. There is no point in being puzzled or complaining about this since you precluded that option by choosing to live in a 1-D world in the first place.

You also gave the concepts of the CIRCLE, the SPHERE and the CLEARE no meaning at all because they are only possible with more dimensions. Now move to a 2-dimensional world or PLANE and choose any point as your origin. You are free to move towards and away from the point in any direction in the plane but you will not be able to move sideways out of the plane. There is likewise no point in complaining or being puzzled because you built in the impossibility in the definition of your 2-D world. The concept of the CIRCLE now has meaning, because you will be able to travel forever along a line in your plane and always be the same distance from your origin. You can also limit yourself to any one of an infinite number of 1-dimensional lines if you wish. But the concepts of the SPHERE and the CLEARE have no meaning because they need more dimensions.

Now move to a 3-D world and choose an origin. You are now free to move towards and away from your origin in any direction in your 3-D space. In particular you will be able to move forever at a constant distance from your origin over the surface of a SPHERE and you can do this in a meander, or you can limit yourself to a one of an infinite number of CIRCLES or LINES. But you will not be able to move 'sideways' out of your 3-D space because you need another dimension. Complaints and puzzlement are again pointless. The concept of the CLEARE has no meaning because it needs another dimension.

Now move to a 4-D world and choose an origin. You are now free to move towards and away from your origin in any direction in your 4-D space. In particular you will be able to move forever at a constant distance from your origin over the surface of a CLEARE and you can do this in a meander, or you can limit yourself to one of an infinite number of SPHERES or CIRCLES or LINES.

It follows that CIRCLES embrace all sizes of LINE; SPHERES embrace all sizes of CIRCLE so CLEARES must embrace all sizes of SPHERE. In the same way that a 2-D circle retains its circularity but is described as flat in 3-D, a 3-D sphere will both retain its 3-D sphericality but become flat in 4-D. The same will apply to a doughnut or indeed any 3-D shape in a 4-D space. Etcetera, *ad infinitum*. How every point of a 3-D shape can be equidistant from a 4-D origin I find impossible to visualise but that is an unfortunate limitation of my poor 3-D mind and not a property of N-dimensional Space.

Geoff Berriman, Doncaster.

G. E. Hobbs' 5in gauge Atlantic locomotive. (Photo: Chris Lee)

Atlantic building

SIRS, - I was very interested in Ron Isted's article on the Great Central Atlantics in *M.E.* 4238, 7 January 2005. I had long admired these locomotives and when Don Young produced drawings and a series on a 5in. gauge model I thought I would have a go at making one.

I obtained a works drawing and had it enlarged to 5in. gauge scale. This proved to be costly but over the period of the work I tried to follow the correct appearance as far as possible. The drawing was No. 63526 and referred to GCR No. 192 and 194. These were Beyer Peacock I believe.

One generally starts with the frames and when I came to look closely at what was involved I began to wonder what I had let myself in for. How would I bend the frames to achieve the crank required? To add to the problem the bends were not at right angles to main axis of the frames. I calculated the angle to be $1^1/2$ degrees. There was also the inside motion plate to be machined to fit.

I cannot remember Don Young's method of doing the job. I clamped bits of metal along the bend lines and then struggled to get the heavy lot of 3ft. long frame, clamps and steel into the vice. I ended up standing on one leg and doing up the vice handle with my knee!

I wish the process could have been filmed. I am sure Laurel & Hardy could have used it in one of their films!

The first side turned out well and I was encouraged. But then the fact that I had to go through it all again to do a mirror image of the first dampened my pleasure. However, I carried on and, to my utter astonishment, the match was perfect. I could not believe it. It was of course a clear case of more luck than judgement.

I would not like to repeat the exercise and I can assure Ron Isted that it took me some time to pluck up the courage to proceed. However, as already stated, all turned out well and I was lucky enough to be awarded a Bronze Medal at the 1989 Model Engineer Exhibition. The model was also illustrated in *Railway World* magazine in May 1989 to show the appearance in colour of these locomotives.

I enclose a photo of the model, which may be of interest. It is a little over exposed which has caused the colours to come out rather lighter than is actually the case.

G. E. Hobbs, Berkshire.

Boiler water treatment

SIRS, - R. G. Smith's questioning of the Guildford MES statement about 'proper water' in boilers is understandable. The reference (*Club Chat M.E.* 4230, 17 September 2004) to 'proper water' being preferable to distilled and rain water in model boilers is a simplification and was rather taken out of context. Of all the articles on the subject, there is an excellent one written by Robin Eycott which appeared in *Engineering in Miniature*, August 1999. It would be a disservice to the author to attempt a précis but two key points may be identified. (1) ferrous and non-ferrous boilers require different water treatment. (2) Unless lucky enough to have naturally soft mains water or uncontaminated rainwater, then water from a domestic softener of the ion-exchange type is considered essential. Unfortunately most rain water, as collected, is contaminated and true distilled water would still require pre-treatment, especially in steel boilers. I believe Robin Eycott's point (2, above) is the best advice for model engineers' boiler water.

I. Carney, Surrey.

Views and opinions expressed in letters published in *Post Bag* should not be assumed to be in accordance with those of the Editors, other contributors, or HIGHBURY LEISURE Publishing Limited.
Correspondence for *Post Bag* should be sent to: -
The Editor *(Model Engineer)*,
Berwick House, 8-10 Knoll Rise, Orpington, Kent, BR6 0PS; fax: 01689 886666
or to **nread@highburyleisure.co.uk** or to **kbarber@highburyleisure.co.uk**
Publication is at the discretion of the Editors
The content of letters may be edited to suit the magazine style and space available.
Correspondents should note that production schedules normally involve a minimum lead time of six weeks for material submitted for publication.
In the interests of security, correspondents' details are not published unless specific instructions to do so are given.
Responses to published letters are forwarded as appropriate.

COMPETITION MODELS
AT THE 74th MODEL ENGINEER EXHIBITION

The well made Heinrici hot air engine built by Norman Barber.

CLASS A1: HOT AIR ENGINES
Reported by Neil Read

Only one entry was entered in this class, the Heinrici hot air engine by Norman Barber. This engine is based on the well-known design originated by 'Artificer' and serialised in *Model Engineer* in 1940. A revised version of the engine subsequently appeared in Edgar T. Westbury's book *Practical Notes on Hot Air Engines*, also published in 1940. Strictly speaking the engine is a replica rather than a model since it is to the same dimensions as the prototype. It is believed that this engine was the smallest in the range manufactured by Heinrici.

However, unlike the prototype, the parts for Mr. Barber's engine were either fabricated or machined from the solid. As Mr. Barber reminded us in his comprehensive judges notes, this was an approach recommended by Edgar Westbury, as castings were not so easily obtained in 1940 as today.

The main body of this engine was fabricated from steel with a brass inner tube forming the upper part of the air chamber. The power cylinder is in mild steel with a cast iron piston. Instead of the copper tube specified for the displacer Mr. Barber chose to use aluminium alloy to help reduce the out of balance forces. The air chamber was also modified to incorporate a stainless steel tube with a copper cap. Other features include flywheels mounted on tapers to avoid the use of keys or grub screws and a furnace fabricated from mild steel sheet. The fuel supply is small gas cylinders. The engine is designed to use water-cooling but the builder assures us that this is not necessary for short demonstration runs. Mr. Barber was awarded a Very Highly Commended Certificate for this fine engine.

Also by Norman Barber was this freelance horizontal steam engine built up from what are believed to be early Stuart castings.

nor do we have X-ray eyes, so notes for the judges solve many a conundrum.

The model was about 200mm long and was presented on a nicely made mahogany base. The engine itself was on a brick plinth made from real miniature bricks. Unfortunately the floor was plain white laminate. Considering the effort put into the rest of the model to simulate full size practice, a tiled floor would have set the engine off more appropriately.

In the quest for realism, certain cast parts had been discarded and fabricated parts used to replace them. But, inexplicably, the bearing caps and slide bars were held down with hexagon screws instead of studs and nuts. However, the general overall finish was good, with nice paint work. Attention to detail was also good but the finish on some of the bright work could have been carried on a little further to remove the last few file marks. What looked like a commercial stop valve was used but it had been modified to have a real four bolt, flanged joint. This model was awarded a Commended Certificate.

There were two models entered by Mr. P. V. Pugh, another regular exhibitor. These were both fire engines. The first was a Merryweather and Son, horse drawn, twin steam pump fire engine, of the Greenwich 'Gem' type, as supplied to Bridport fire brigade in 1886. Excellent judges notes were supplied detailing the research that had accompanied the building of the model. The model to 1:10 scale was well presented on a green baize base, under a glass case. Arguably, the latter

The Merryweather and Son horse drawn, twin pump fire engine by Mr. P. V. Pugh

CLASS A2: GENERAL ENGINEERING MODELS
Reported by Anthony Mount

I mentioned in last year's report that I was disappointed in that there were only five entries in this class, one up on the year before, with only four turning up. I regret that it was the same sorry situation this year. It is easy to get to Sandown and the parking is free. It would be nice to have a good selection of models in all the classes. There were two new stationary engine models in the loan class that could each have won an award. Builders should remember the old adage - nothing ventured, nothing gained.

Norman Barber, a regular exhibitor, this year entered a freelance horizontal steam engine based on what are believed to be early Stuart castings. Also there were judge's notes, which are always a great help. We do not know what is in the builders mind when he constructs a model,

Also by Mr. Pugh was this Shand Mason manual fire pump.

A neat two-cylinder, double acting, oscillating cylinder Uniflow engine by Ian Cornish.

item is essential with a delicate model with much fine detail. The model was presented fully equipped with rolled hoses, bucket, shovel, fire irons and oil can.

Nearly every part had been made by the builder, including the 14BA nuts and scale gauge glasses. The detail was very fine and worthy of close inspection. With fire engines of this period there was also a fair amount of woodwork involved and this was as equally well executed as the metal parts. There was a very small dent on the rim of the boiler and I did wonder if this was also present in the full size prototype. Even the boiler mounted acid etched nameplate had been made by the builder. The engine drive to the pumps was by Scotch cranks. The painting was very nicely done, as was the lining. The model well deserved its Gold Medal.

The second engine from Mr. Pugh was for a Shand Mason manual fire pump. Presented to the town of Oswestry by Mrs. A Wynne Corrie in 1887, the Jubilee year of Queen Victoria. The model was to 1:8 scale. This was again a very nicely presented model on green baize in its own case but less complex than the other entry by this builder. There was a lot more woodwork in the construction and where the grain was visible it was close to scale.

As before the painting and lining was well done, but the depth of colour was not the same as for the steam pump. The oil lamps either side of the driving seat were delightful. This model was awarded a Silver Medal.

The last model to be described was entered by Ian Cornish, also a regular exhibitor. This was for a two-cylinder, double acting, oscillating cylinder Uniflow engine. However, no notes were provided so the internal arrangements remained a mystery. The engine was about 100mm high and the cylinders approximately 16mm diameter. There was a reversing block arrangement on top. Constructed mainly of brass it was an interesting engine and it would be fascinating to know more of its performance when compared with a traditional oscillating engine. Perhaps Ian could give us an article on the engine.

CLASS A3: INTERNAL COMBUSTION ENGINES

Reported by Brian Perkins and Neil Read

Regrettably only one entry was received for this class, however Mr. Rolf Depping's model of the 1938 DKW ULD 250cc racing engine was remarkable to say the least. From the very early days of internal combustion engine development attempts have been made to try and extract as much power as possible from the two-stroke engine. After all, it fires twice as often as the four-stroke engine so why does it not produce twice the power for a given capacity? Early engineers and designers thought it might be possible to extract more power than an equivalent capacity four-stroke and in the first decade of the last century racing two-stroke motorcycles were in fact handicapped by a factor of 1.25 for air-cooled engines and 1.32 for water-cooled engines. That is to say, for a given racing class the capacity of competing two-stroke engines could not exceed the class limit when multiplied by the above factors.

Subsequent tests showed that the conventional Day cycle two-stroke did not live up to these high expectations and many attempts were made to improve performance. This was usually at the expense of simplicity, which was the two-stroke engine's main advantage. Of course, by applying knowledge of the wilful way of moving gases, modern engines have come close to realising the dreams of the early engine designers – just before two-stroke engine development fades out as environmental issues come more to the fore.

During the 1930s the German firm of DKW used the split single concept very successfully in their range of engines. Linked to supercharged induction arrangements, this engine format gave very high performance on the racetrack and DKW motorcycles competed very successfully on the Isle of Man and elsewhere. Mr. Depping's model appears to use a supercharging cylinder, which forces the mixture directly into the cylinder via the transfer ports. Induction from the two carburettors to the supercharger appears to be via a rotary valve. If we have a criticism it is that we found the exact working of the engine difficult to follow even with Mr. Depping's notes. Another minor point is that some of the nut and bolt hexagon sizes seemed to be over scale.

Otherwise, this model appeared to be very well made and was finished in the first class style now expected from the hands of this accomplished model engine builder. The form on the cylinder fins was also very good. The judges had no hesitation in awarding Mr. Depping a Gold Medal and the Edgar Westbury Memorial Trophy.

The 1938 DKW ULD 250cc racing engine built by Mr. Rolf Depping

We know that there are many fine I/C engine models in the pipeline for future years but are equally sure that there must be an even greater number of engines which have been completed and would only require a determined effort by their builders to make this class stand out at next years show. Come on chaps let's show the other classes how good we are.

CLASS A4: MECHANICALLY PROPELLED ROAD VEHICLES

Reported by R. Heugh & H. Paviour:

One of the largest models on display within the competition classes was Mr. S. R. Harbach's 1:4 scale Burrell showman's road locomotive *The Griffin*. There was no doubt that this model was a worthy winner of the Bill Hughes Trophy and a Gold Medal. However, a few more marks could have been achieved if the lining had the same quality as the rest of the workmanship. The governor drive belt should have been of leather not rubber. To complement the model's presentation at the exhibition, the builder had set it within a sea of patterns, castings, photographs and information. The model and all these additions attracted a continuous audience throughout the entire show comprising visitors, members of the trade and other exhibitors.

To assist the judges job there was provided an abundance of information on the research from a known prototype and the approach to the construction, including the entire pattern-making process, etc. To give the reader some idea of the work involved, the following is a short excerpt from the builder's notes.

"I have built the whole of the model's patterns for castings, core boxes and cores, all made from my own drawings. The cylinder block mould had 14 cores inside which were tested for position by producing plaster castings at home, which were sectioned to check core positioning. When I was satisfied with these I followed up at the foundry, working on the moulds (two), and seeing the castings poured. Some of the smaller castings I have done myself in the back garden."

The next model to be judged was a 1:4 scale Fowler road locomotive, built originally by the late Richard ▶

Mr. S. R. Harbach's 1:4 scale model of a Burrell showman's road locomotive with its canopy lights ablaze.

Originally built by the late Mr. Dick Hodges and finished by Ron Dawe this Fowler road locomotive drew many admirers.

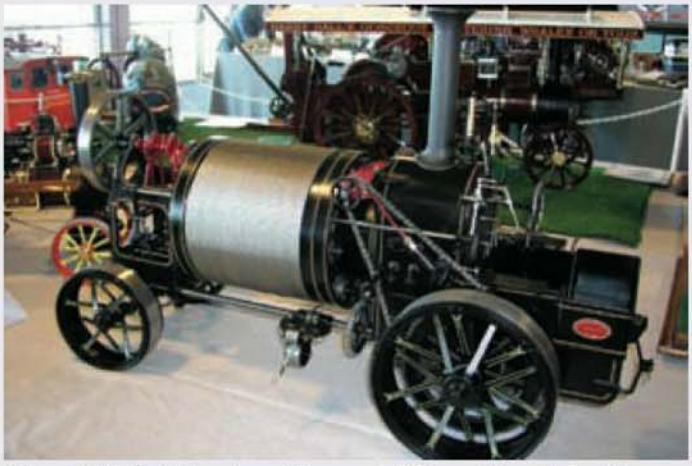

Of great historical interest was this superb 1:8 Savory/Garrett ploughing engine based on a prototype built in 1864.

Always a popular favourite amongst model engineers, this example of the Allchin traction engine was built by Mr. Eric Williams

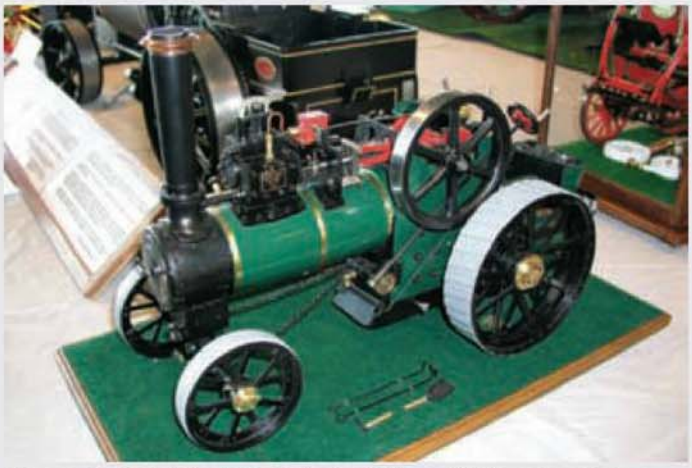

Also popular is the Minnie design by L. C. Mason. This fine example was built by Mr. Kenneth Sims.

(Dick) Hodges of North Kent. Having built the model, the builder was engaged in painting and then re-assembling the engine when he unfortunately died. Fortunately for us all, Mr. Hodges had a good friend in Ron Dawe, also of North Kent, who took on the task of completing the model for us all to enjoy at the exhibition. Fortunately a sufficient number of suitable photographs were taken for the judges to make their assessment of the builder's actual work. Additionally there was also an abundance of supporting information on the work of the builder for the judges to see. The judges were very pleased to award this model a Silver Medal.

The next model the judges looked at was a superb example of a 1:8 scale Savory/Garrett ploughing engine by Mr. Dave White. Certainly something different from the normal models seen in this class at exhibitions. The judges have to admit they had to get their reference books out for this one! The workmanship was to the highest standard, displaying all the potential for an entry in a forthcoming Duke of Edinburgh section. The attention to detail was endless. If the reader had been sitting on the shoulders of the judges they would have seen the marks for all the judging sections rapidly mounting up. As a result of the high marks awarded the model gained the Aveling & Barford Trophy and a Gold Medal.

Both the judges found this entry a pleasure to assess. For those readers who were unable to attend the exhibition I have with the builder's permission included some of the supplied information on the research and construction for the model.

"The prototype was patented in 1861. This early ploughing engine was one of a pair designed to operate by moving along the headlands on each side of the field pulling a multi-furrow plough between them by means of a wire rope wound on a drum on each engine.

Although this way of steam ploughing subsequently became the preferred method, this engine type - using a rope drum concentric with the boiler - was a very early design and very few were made. The original concept was proposed by Savory & Son of Gloucester and was the subject of Patent No. 1821, which was acquired by Garretts of Leiston and who constructed a pair of these engines in 1864.

The model was built to a scale 1½in. to 1 foot. Despite extensive research, it was found that very little information has survived. The patent drawings are necessarily vague and contain only outlines of working principles. An old photograph of one of the original pair of engines is contained in John Crawley's book Ploughing Engines in Focus *and this was scaled and used throughout for prototype details. A certain amount of imagination was also found necessary!*

The return tube boiler is based upon design details and calculations contained in K. N. Harris's book Model Boilers and Boilermaking *and is very free steaming. Three methods of supplying feed-water to the boiler are provided: a ram pump driven off the cross-shaft, an injector, and an emergency hand pump located under a removable tender floor plate.*

The boiler safety valve is the reliable and easily adjustable 'ball and spring' type. It also has a lever and external spring to simulate the Salter type safety valve used in the prototype. The loading is very light and thus has very little effect on the operation of the ball valve.

The engine has two 1¼in. diameter double acting cylinders with Stephenson link valve gear driving slide valves and gives good torque at low speeds. Cylinder lubrication is provided by an oscillating cylinder, mechanical lubricator driven off the crankshaft.

The winding drum carries 50 metres of wire in a single layer, and the leadscrew rope guidance system works perfectly.

Castings, in iron or gunmetal as appropriate, were produced commercially from homemade wooden or aluminium alloy patterns. All gears were cut on my homemade milling machine, the bevels by means of single point rotating form tools and the internal 114 tooth gear ring at each end of the rope drum using a form tool driven by a slotting attachment adapted for use on the milling machine.

The approximation of the original pitch chain used to drive the hind wheels was made by removing the rollers from standard roller chain and machining the link cheeks to a more representative shape."

A regular model seen exhibited at model engineering competitions is the ever-popular 1½in. to the foot Allchin Royal Chester. The judges considered that the example exhibited by Mr. Eric Williams was a fine example and well deserved the Bronze Medal it was awarded. A model of this scale can still include the attention to detail of a belt drive to the governor, lock nuts, split pins, etc. Marks can also be gained by displaying the model with the full range of tools, wheel spuds, haulage chains and wheel chocks.

Mr. Alan Walker's magnificent 1:6 model of a Burrell scenic showman's engine drew many admiring visitors.

Based on an unusual prototype, Mr. Brian Baker's 5in. to the foot Foster single-cylinder, rope hauling engine was an impressive exhibit.

This model displayed a high level of workmanship and the paint work and lining were good. A little more attention to detail would have gained a higher award. Despite these comments, it is evident the model has given the builder a lot of pleasure in its construction. We are sure the visitors to the exhibition enjoyed it too.

Another regular design seen at any exhibition is the 1:12 scale Minnie. An example built by Mr. Ken Sims was entered into the competition this year. It has not been a regular feature in the past to be presented with 'information for the judges' on a CD but we must move with the times.

The model appeared to have been well made, but even for a small model of this scale, the painting and overall finish could have been much better. Considering these points the judges were pleased to award the model a Highly Commended Certificate.

Alan Walker's model to the popular Thetford Town design, the 1:6 scale Burrell scenic showman's engine *Lord Curzon*, is no stranger to the exhibition world.

Readers who visited the Harrogate Show nearly two years ago will have seen it displayed in all its glory. The model also did the Model Engineer Exhibition proud. The amount of interest shown by the visitors throughout the entire show was intense. There were a number of the finer points of detail that could have been attended to and included, even for a working model of this size, and this could have taken the model up into a higher award. Never the less the judges were pleased to award this model a Bronze Medal.

There is always the argument as to whether a 5in. to the foot scale model is actually model engineering or small-scale engineering. A late, but never the less very welcome, addition to the exhibition was Mr. Brian Bakers 5in. to the foot Foster single-cylinder rope hauling Engine. Weighing in at 820kg, its imposing appearance again attracted a lot of attention. It was a well-constructed model of this unusual design. Whilst there was a lot of detail in the construction, even for a model of this size, the overall quality of presentation was not high and therefore could not attract one of the higher awards. The model was awarded a well-deserved Very Highly Commended Certificate.

To conclude the report on this section of the competition the judges would like to express their appreciation and pleasure at being able to see such a varied selection of models at this year's exhibition. All the entries for this competition class were to a standard that enabled every entrant to take home a well-deserved award. Well done!

●*To be continued.*

MAKING SPECIAL WASHERS

Philip Bridgway
explains how to make washers with convex or concave faces.

Readers may be interested in the enclosed drawing and photographs which show a method of producing washers with radiused faces, either convex or concave and symmetrical or offset. These are particularly useful in locomotive smokeboxes and I have used these for the chimney, steam inlet and exhaust (see photographs) on my engine.

Symmetrical washers are produced with the tool set concentric to the lathe mandrel in a 3 or 4-jaw chuck with the radius of the washer measured from the centre with dividers for both convex and concave washers.

Offset washers use the 4-jaw chuck with the tool set off-centre on the line of one set of jaws by the distance of offset required.

The washers are adjusted for thickness and hole size as necessary as a secondary operation. Dimensions of the tool are not critical and the scrap box can be raided yet again for the necessary material to make the device.

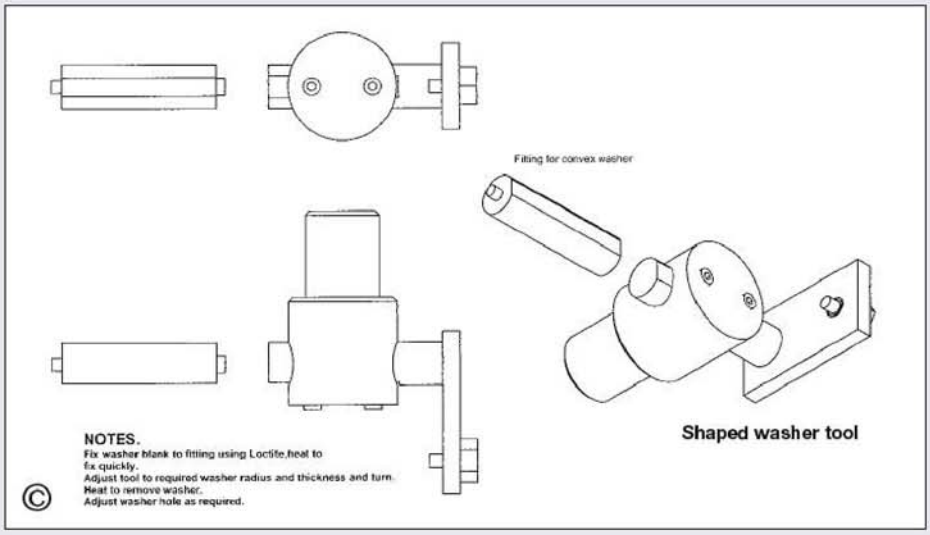

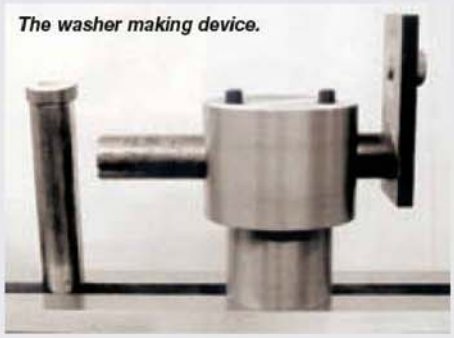

The washer making device.

Examples of the work it can produce.

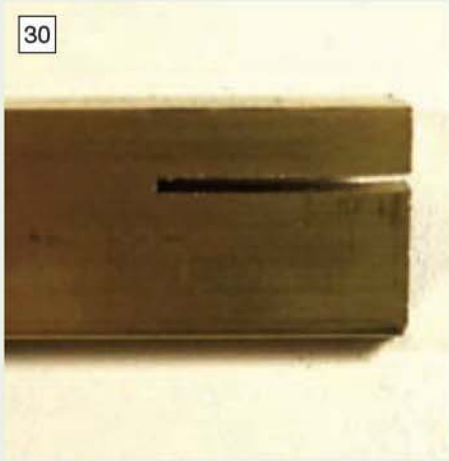

The first stage in forming the ends of the free standing columns.

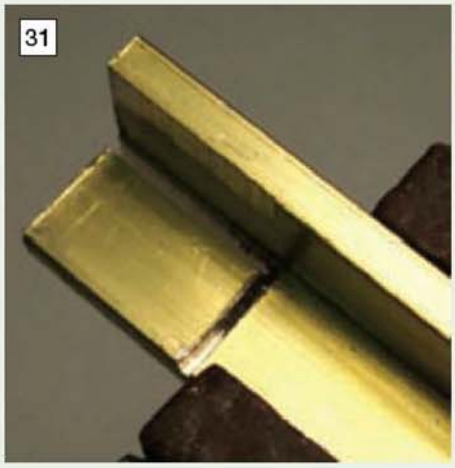

The second stage is to cut a groove in the material like that shown.

The tool used to make the second cut was a piece of broken hacksaw blade in a handle.

RE-CASING A FRENCH CLOCK MOVEMENT

Ian Beilby
now describes how to fit the movement into the new case.

●*Part IV continued from page 141 (M.E. 4240, 4 February 2005)*

In order to secure the movement to the main plate using the two bezel/movement straps, two free standing columns are fabricated from 1/2 x 1/8in. brass angle. **Figure 6C** illustrates the column with its stepped base and base for the decorative finial. The body of the column should have a finished length of 6 inch. This length is not critical, but both columns, when finished, should be the same length.

The column requires a right angle to be formed at the top and bottom in order to attach the column to the wooden base, and attach the decorative finial to the top of the column. In order to achieve this a length of 1/2in. angle, 7 1/4in. long, will be required and a vertical saw cut made along the angle from both ends for 5/8 inch (**photo 30**).

The work is then held in the bench vice and a saw cut or groove made into the brass at ninety degrees to this first cut (**photo 31**). In order to make this saw cut I used a broken hack saw blade fitted into one of the commercially available handles that are sold for these blades (**photo 32**). The front of the blade was ground away at an angle in order to facilitate the teeth of the blade making a full cut along the width of the brass. The saw cut is made to a depth of just over half the thickness of the brass. The brass will require heating with a small blowtorch in order to facilitate bending. Bending the brass using a pair of pliers then closes up the saw cut as shown in **photo 33**.

A further cut is now made into the previous saw cut, opening the cut and allowing the brass to be bent further. This process is repeated until a right angle has been formed (**photo 34**). The angle should be checked when nearing completion with an engineer's square. Both completed columns can be seen in **photo 35**.

Any surplus material should be filed off and all the faces of the column should be checked with an engineer's square. The columns should then be placed on a firebrick and the saw cuts filled with soft solder (**photo 36**).

The columns should initially be cleaned up and any surplus solder or flux should be removed. Any final polishing can be left till later as the columns are going to be handled a number of times whilst various holes are drilled and other components fitted. The columns should be marked with a felt pen and designated left and right, top and bottom. Holes are drilled in the top and bottom of the column at different centres and care should be taken not to confuse the two. Reference to fig 6A illustrates a plan view of the top of the column and the finial base. The 3/4 x 3/4in. finial base is cut from 1 x 1/8in. brass strip and provided with a 4BA clearance hole drilled in the centre. The centre of the top of the column should be centre punched and drilled with a 4BA tapping drill before being tapped 4BA.

Owing to the method of fabrication there will be an unavoidable curve to one edge of the column. The square edges of the column should be used when marking out the dimensions.

Figure 6, B and C, illustrates the relationship of the column and the stepped base of the column. In order to accommodate the head of a wood screw, the clearance hole in the base of the column must be drilled off centre. Correspondingly, if the stepped base and the column are to line up correctly, the holes drilled in the components making up the stepped base of the column must likewise be drilled off centre.

Again when marking out the dimensions for the clearance hole in the base of the column the square edges of the column should be used for reference. The dimensions given in fig 6B must be carefully marked out and centre punched before drilling the holes in any of the components.

The 3/4in. and 1in. square column bases should be cut from 1 x 1/8in. brass strip and the

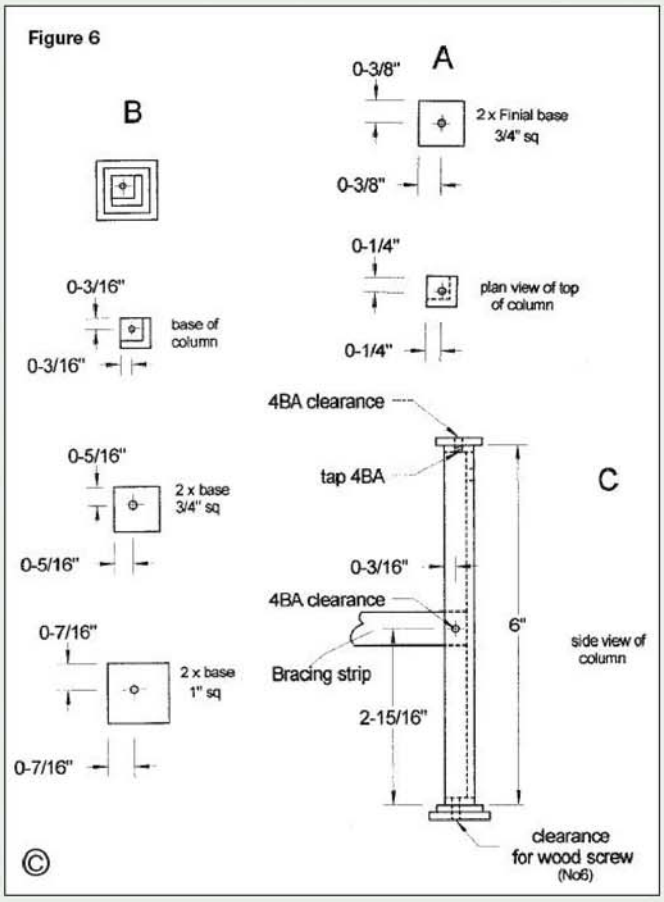

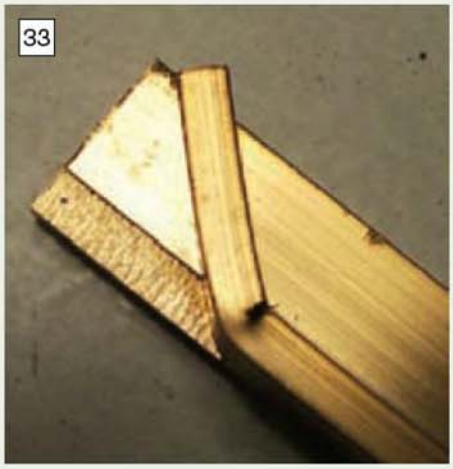

Bending of the brass can now begin to start forming the end of the column.

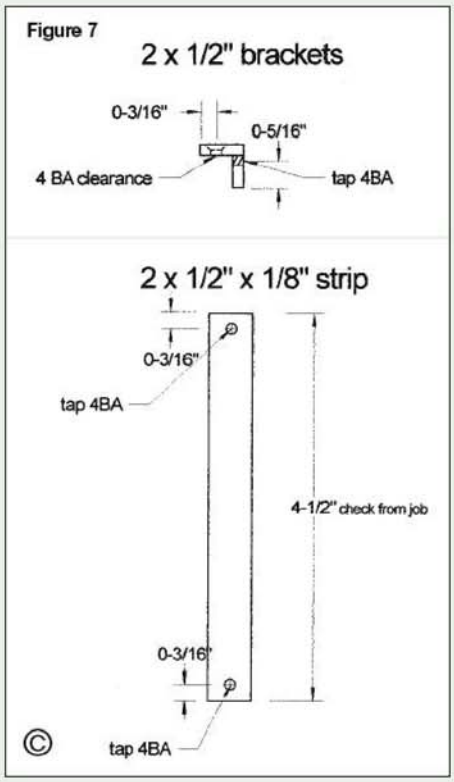

Further work with the hacksaw blade allows the bend to be completed as shown.

dimensions for the clearance holes marked out and centre punched before drilling.

Referring to fig 6C the countersunk 4BA clearance hole drilled in the side of the column at $2^{15}/16$in. is to take the 4BA screw that secures the column-bracing strip. Another clearance hole will be required in the top of the rear face of the column to take a screw for the movement strap.

In order to provide rigidity, the two columns are braced from the main plate by two lengths of $^1/2$ x $^1/8$in. brass strip. The length of the straps fitted to the movement determines the length of this strip. The strip should be $^1/2$in. longer than the movement straps in order to be able to tighten the movement firmly in the main plate. One end of the bracing strip is attached to a $^1/2$in. bracket screwed to the rear of the main plate, the other end is secured to the column with a 4BA screw. **Figure 7** gives the relative dimensions of these components. All the dimensions should be marked out and the holes carefully drilled and tapped. **Photograph 37** shows the two columns, $^1/2$in. brackets and bracing strips. The clearance/locating holes for the $^1/2$in. bracket screws should have been drilled in the main plate at C in fig 1.

The two $^1/2$in. brackets which are secured to the rear of the main plate with two brass cheese head 4BA screws can be seen in **photo 38**. In order to obscure the heads of the screws on the front of the main plate, the screw heads are drilled through the centre in order to accommodate the pin of a decorative rosette. The hole should be drilled undersize for the diameter of the pin, and opened with a tapered cutting broach in order to provide a positive fit. When the clock is finished the two rosettes are a simple push-fit into the heads of the screws.

All the various components can now be assembled and fitted onto a temporary base as shown in **photo 39**. The main plate is screwed to the wooden base and the column bracing strips are attached to the main plate. The rear columns are attached to the bracing strips and all the screws tightened up. The wood screws can then be screwed through the rear column/base into the wooden base. Finally, the finials and their bases are screwed in to the main plate and the columns.

Now that a check has been made to ensure all ▶

This is how the columns should look after both ends have been bent to the required 90deg. angle.

Here the saw cut grooves have been filled with soft solder so that each column is as rigid as possible.

The columns and other parts can now be marked out and the necessary holes drilled and, where appropriate, tapped.

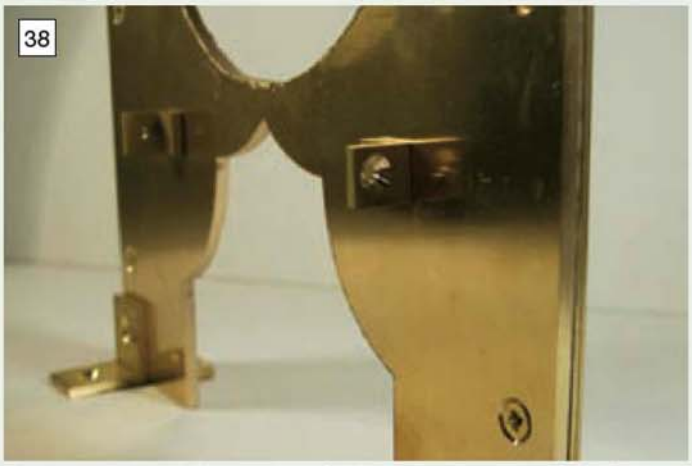

The two angle brackets are screwed to the rear of the main plate with screws inserted from the front of the plate.

The columns and other parts assembled onto the main plate of the clock.

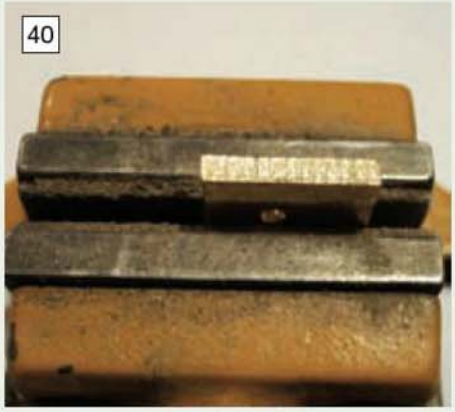

Great care should be taken with finishing all parts. This rough sawn finish will not do!

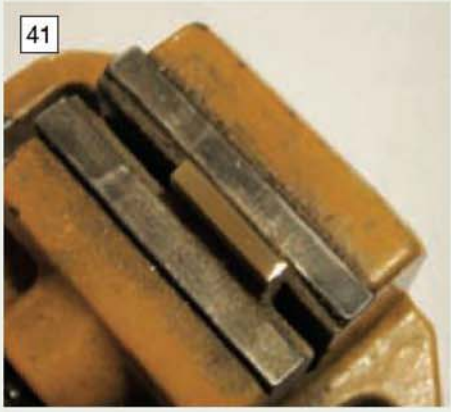

Here the surface has been cleaned up with a file and polished.

The ornate wooden base made for the clock ready to receive the new parts.

The polished main plate and columns assembled onto the base.

The cleaned and polished movement mounted into position.

the components fit together correctly they should be dismantled for final finishing and polishing. **Photograph 40** shows the rough sawn finish of one of the finial bases and at **photo 41** the same component after being brought to a highly polished finish. All the edges and surfaces of the main plate, columns and other components should be polished and finally lacquered.

A suitable base was made as shown in **photo 42,** and the reassembled components fastened in place can be seen in **photo 43**.

The wooden base has been made with a raised plinth and a raised decorative moulding placed around the edges of the base. This raised edge helps to locate the rectangular glass case when fitted in place. Finally, the cleaned and repaired movement was secured into the new case as seen in **photo 44**.

All the moving components of the clock movement and pendulum are now fully visible as can be seen in **photos 45** and **46**.

In **photo 47** you can see the completed clock and the glass case. The case has been made from 3mm glass and 1/2 x 1/16in. brass angle. The movement is now fully visible and safely protected from harmful household dust and dirt.

I hope readers agree this project to re-house a redundant movement has been well worthwhile. Not only has the movement been given a new lease of life, but if at a later date a more suitable contemporary case were to turn up, the movement can be simply removed and installed into another case, no fittings or components having been altered or removed in the process.

The exposed movement, however, must be protected with a suitable case. Modern glass domes are available in selected sizes, but I felt the layout of this clock lent itself to a rectangular case. In parts five and six I will show how I made the case illustrated in photo 47.

●*To be continued.*

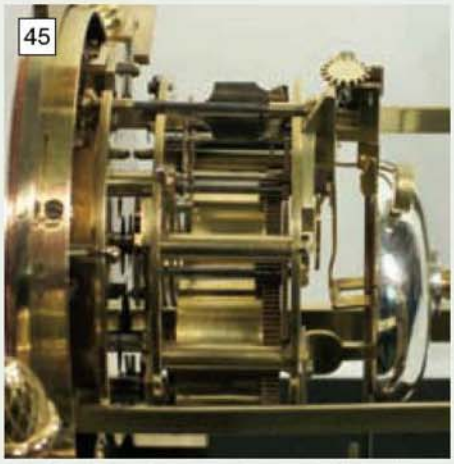

A view of the restored movement showing the quality of finish achieved on all parts.

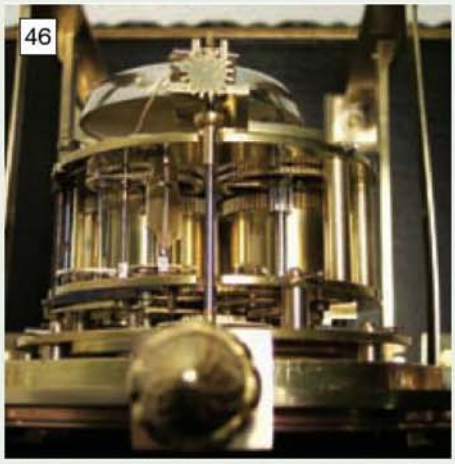

A birds-eye view. All of the original features of the movement have been retained.

The construction of this glass case will be described in the remaining parts of this series.

FAIRBAIRN'S COLUMN ENGINE

Anthony Mount finishes the description of the piston rod cross head before moving on to other parts of this splendid engine.

●*Part VII continued from page 159 (M.E. 4240, 4 February 2005)*

Mount a dividing head on the milling machine and hold the bar, with the embryo piston rod cross head on the end, in a collet. Place a drill through the eye hole and adjust until the drill is vertical to the table. Then, with the end of an end mill, form the two flats either side of the ball end. This setup is shown in **photo 37**.

Back in the lathe part off and reverse in the chuck. To hold the cross head, drill in a scrap of brass rod of larger diameter than the cross head, a hole the same diameter as the waist of the cross head. Saw the brass collet halfway through and use as a collet to chuck the cross head for drilling and tapping the end hole. This is illustrated in **photo 38**.

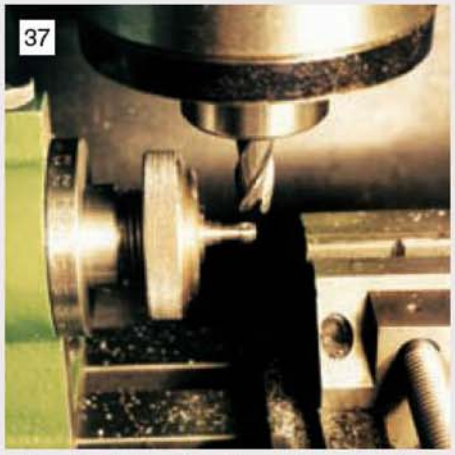

37

Milling the flats on the piston rod cross head using the vertical milling machine.

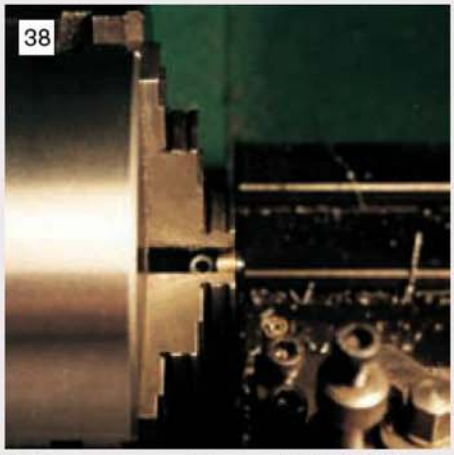

38

Using a purpose made brass collet to hold the piston rod cross head for the final operations.

Pivot pin and end caps (part 41)

To tie the rocker arm and the end of the parallel motion outer levers together we need a pivot pin of some sort. It could be a stud with a nut each end but it looks much neater if the pin is a straight length of 2.5mm diameter mild steel rod drilled through 1.6mm and two caps pressed in.

Outer parallel motion levers (part 42)

Two laser-cut outer parallel motion levers are supplied. All that needs to be done is to draw file the edges to give a clean finish and to open out the holes to the required diameter of 2.5 millimetres.

Pivot pin and end caps (part 43)

To join the inner and outer levers together we need another pivot and, as for part 41, a straight length of rod with two end caps nicely fills the bill.

Parallel motion inner levers (part 44)

Unfortunately the inner levers are more involved than the outer levers. They are made up of two eyes and a connecting rod. Another form tool is needed for the ball ends, same type as described before but just a different size.

Face off the end and cross drill the hole. Form the ball, turn down the waist and part off. Make up a split brass collet to grip on the waist and, holding in the chuck, face off the end and drill down for the connecting rod. File flats either side of the cross-hole.

The rod is 1.6mm (1/16in.) dia. stainless steel as this diameter only seems to be readily available in this material. As you can see in the drawing it is offset 3.9 millimetres. This can be done by hand with a pair of pliers. However, it will pay to make up a little jig to hold the eyes in the correct orientation while the Loctite goes off and to get both rods to finish the same length.

The jig, detailed as part 65, consists of a small piece of flat bar material with two pins the holes for the pegs being drilled using co-ordinates. A 3.9mm thick washer on one of the pegs will bring the rod into the right plane. Loctite both eyes, slip onto the rod, drop the assembly onto the jig and leave until dry. Wipe off any surplus Loctite to stop it sticking where it is not wanted. Be very careful here as it would be very easy to glue the eyes to the jig, which is shown in **photo 39**.

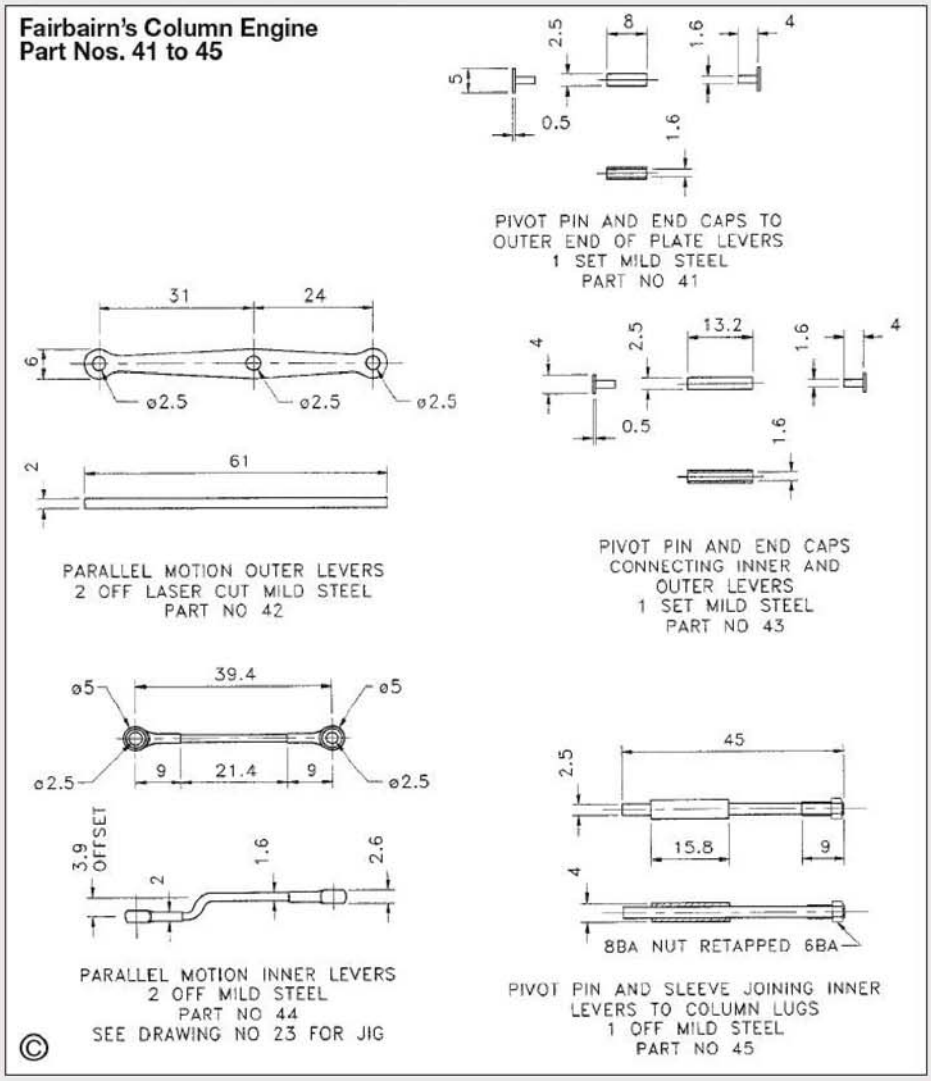

Pivot pin and sleeve (part 45)

To hold the inner levers in place with the lugs inside the column another pivot is needed. I had in mind just a straight length of 2.5mm diameter steel rod, passing through a 4mm diameter sleeve. To assemble the parts the pin would be passed through the right hand governor lug, then through the eye of a lever, then through the sleeve then through the other lever eye, then into the other lug inside the column. It would be trapped in place by the stud holding the governor bottom bracket in place. However, should one ever want to take the engine apart, it would be a dickens of a job trying to get that pin out. So I incorporated the pin and the nut together as one component then, by undoing the nut, the pin can be drawn out with it.

So, turn down a length of steel rod to 2.5mm dia., then increase the diameter to 2.8 millimetres. Part off reverse and thread the larger section 6BA. Take a standard 8BA nut, which is being used for neatness, and re-tap it 6BA. Loctite the nut to the rod. Check that the rod passes easily through the lugs and screws into the front lug trapping the governor lower bracket.

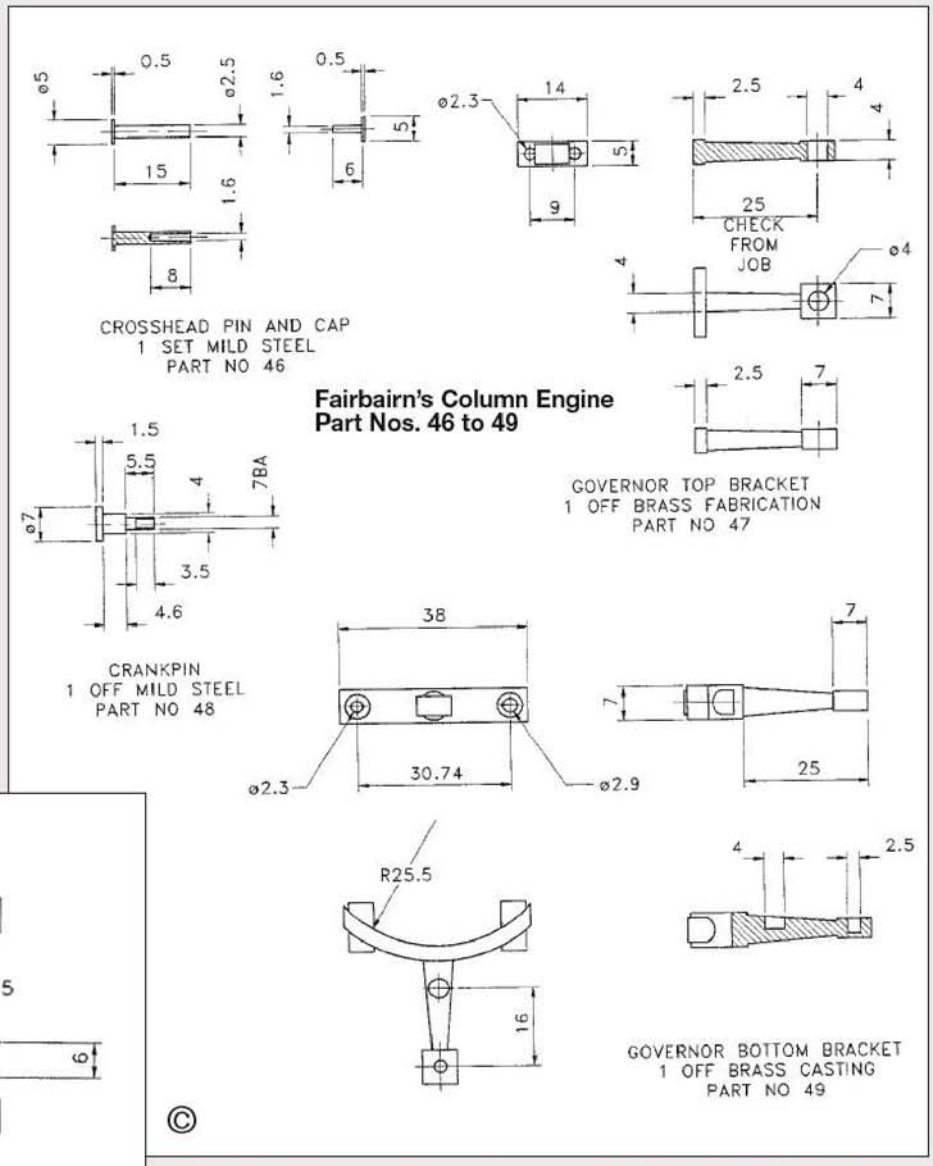

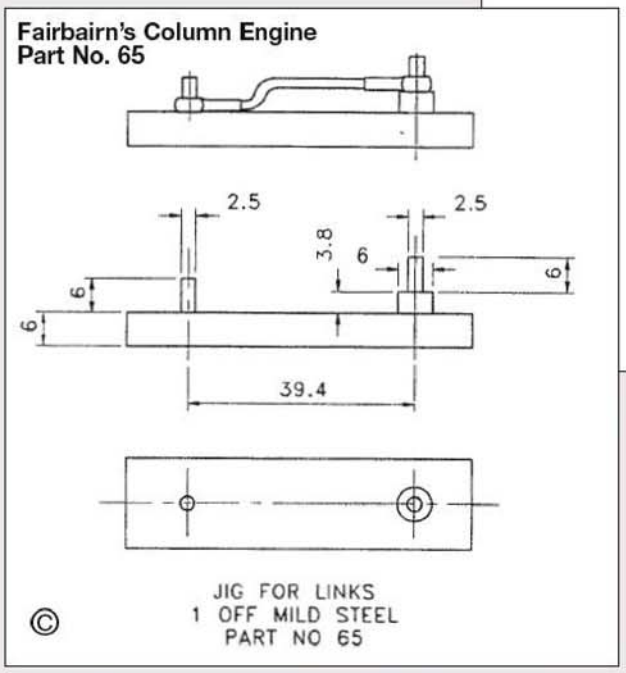

Cross head pin and cap (part 46)

The last pivot pin to make ties the plate levers, cross head and connecting rod together. This can be made with an integral cap one side and a pressed in cap the other. Turned down from 5mm (3/16in.) dia. mild steel rod and give a good polished finish to the pivot.

Governor top bracket (part 47)

I was going to make the top governor bracket as a casting but its length depends on the location of the bottom bracket and as this is fixed to the column casting it seemed easier to measure its length from the actual engine.

Chuck a length of 5/8 x 1/4in. brass rod in the 4-jaw independent chuck, centre and give tailstock support for turning down the tapered section leaving the square end block long enough for the centre to be cut off later.

The small assembly jig devised for the parallel motion inner levers.

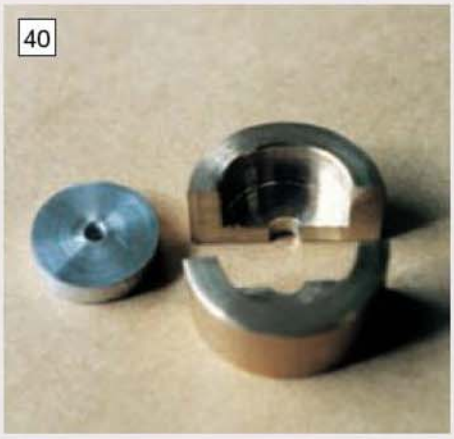

The collet for the governor bottom pivot block. The item on the left is a spacer.

The collet is use. The spacer is placed behind the work to stop the collet folding up on itself.

Drill the pivot hole and mill the square end to size. Cut off from the parent bar and mill the sawn face flat and drill for the two stud holes.

Crankpin (part 48)

The crank pin is a simple turned item from 6mm dia. mild steel. Turn down the two steps with a polished finish on the bearing surface. Thread the end 7BA, and part off, reverse and face off the flange face finishing with a small chamfer.

Governor bottom bracket (part 49)

The governor bottom bracket is a brass, lost wax casting and needs only a little work done to it. First drill the pivot hole then the stud holes which are already centred. The bosses can be filed or milled flat to fit on the lugs on the column. In fact, I almost milled them away so that the bracket could be seated as close to the column as possible.

Pivot column (part 50)

For the pivot column we need a piece of 5 x 5mm mild steel. This can be machined down from 1/4in. square material. Start by holding in the 4-jaw chuck and face off the end. On the milling machine, cross drill for the hole and, with a slitting saw, form the slot. Back to the lathe turn down the stem, the end boss and part off. The pivot column can be fixed to the governor bottom bracket with Loctite.

Governor bottom pivot block (part 51)

The lower sliding section of the governor, the bottom pivot block is a small, lost wax casting. Start by drilling the pivot holes, which are already centred. The groove needs to be cleaned up and the hole drilled through the centre. To do this we need to be able to hold the block in the chuck and this requires a little collet. It takes the form of a cup, drilled through to fit around the centre of the block and opened out to clear the pivot arms. It is sawn in half and a spacer washer at the back stops the collet from folding up on itself. The whole collet is shown in **photo 40** and the collet and block in the chuck in **photo 41**.

A parting tool can clean up the groove, only a scrape is needed, then the end can be centred and drilled through and reamed a sliding fit on the governor shaft.

Governor upper arms (part 52)

We are now getting to parts that are quite small and need a bit of extra care to make. For the governor upper arms another two little form tools are needed for the ball ends, make as before from gauge plate.

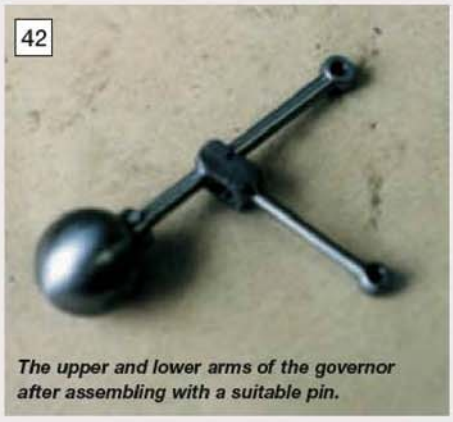

The upper and lower arms of the governor after assembling with a suitable pin.

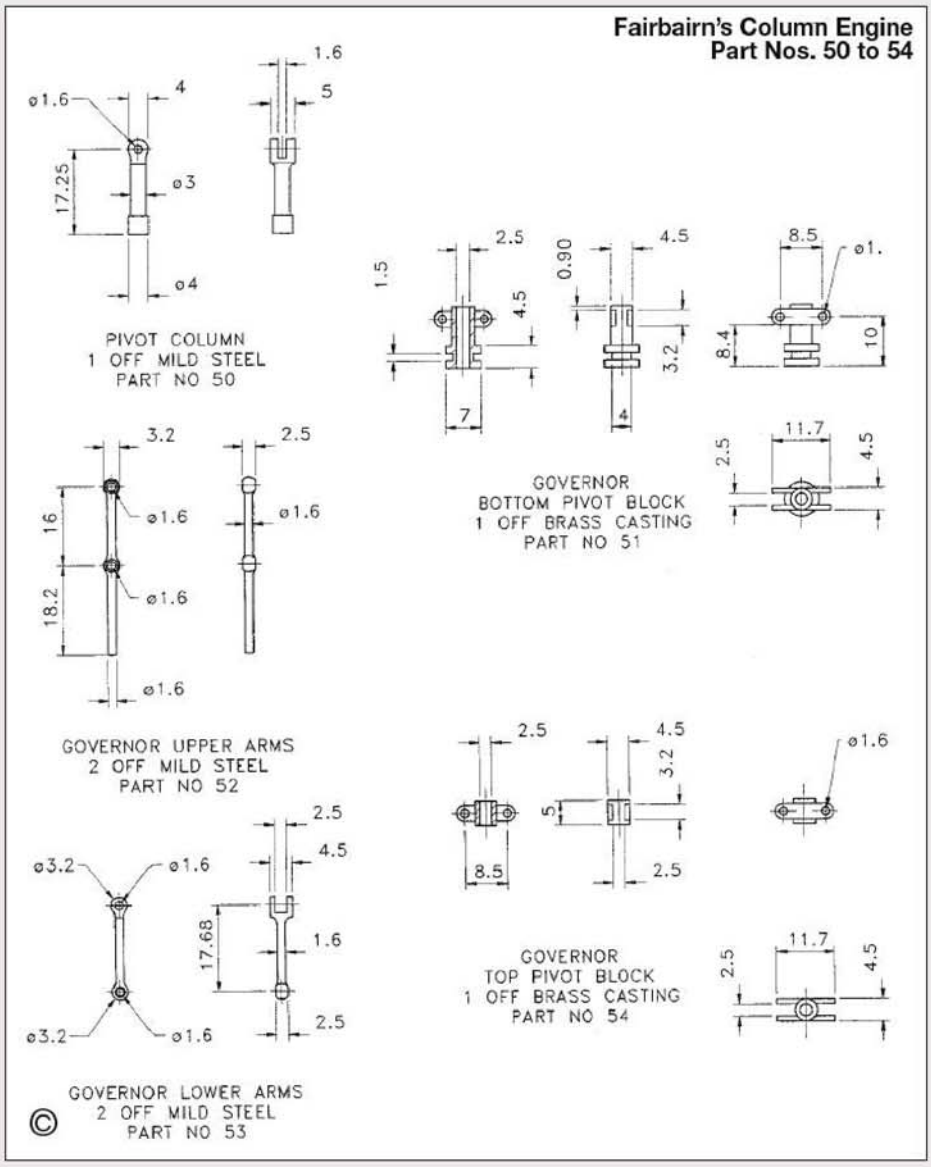

Use 5mm (3/16in.) dia. free-cutting mild steel. The larger diameter will give strength against cutting forces. Cross drill the two holes to start with. Chuck with only about 10mm (3/8in.) proud of the chuck jaws and turn the end ball, checking that it is central around the cross hole. Pull another 20mm (3/4in.) from the chuck and turn down the stem to 1.6mm dia. in stages. Do, say, 10mm length to 4mm dia., then 3mm then 2mm then 1.6. Repeat further along almost to the next hole. Pull a little more from the chuck and form the second ball. Pull more from the chuck and turn the rest of the stem, again doing it in stages.

The reasoning behind the process is to keep the cutting stresses down to avoid breaking the lever. A sharp cutter is obviously needed. Examine the result with a magnifier, you will probably find that even with all our care the finish is not all that good, so tidy it up by using a fine file in the lathe. I should not need to point it out but a properly fitted handle to the file is essential for use in the lathe. Essential for hand use as well, a file tang through the hand would be mighty painful. Part off from the parent bar and then machine the second one.

Governor lower arms (part 53)

For the governor lower arms start with a length of 3/16in. square mild steel, chuck in the 4-jaw and face off. Drill the cross holes in the mill using co-ordinates, make the hole one side 1.5mm dia. and the other side 1.6mm diameter.

Back to the lathe and turn the ball with a form tool, the same one as we used for the upper arms. Turn the stem. Now back to the milling machine, and with the end of an end mill, face off either side of the fork. Set up a 2.5mm slot drill in the spindle, the sort that has an over centre cutting edge so that it can be plunged into the metal. Start a little way away from the fork, feed in and form a slot stopping at the bottom of the fork. Set the stops on the table, and in a series of cutting steps form the complete slot. Cut off from the parent bar with a junior hack saw and round the ends of the fork around the cross drilled hole with a flat file.

The upper and lower arms are shown fitted together in **photo 42.** I used a 1.6mm pin, which was passed through one side of the fork, through the eye of the upper arm and then pressed into the 1.5mm hole on the other side of the fork. The pin, which was a little long, was filed down flush both sides.

Governor top pivot block (part 54)

The governor top pivot block is another brass lost wax casting. It comes with a chucking piece, which can be used to hold the block for drilling the pivot holes again ready centred. Chuck in the lathe, drill the centre hole a tight fit on the shaft and part off.

●*To be continued.*

Using a lightweight hand-piece in the writing position described by the author in the text.

Heavier hand pieces are better gripped in the manner shown for work such as grinding or wire brushing.

FLEXIBLE SHAFT EQUIPMENT

Robert Cutler
gives details of a handy, home-made tool that can out perform commercial items.

Veteran readers may recall a detailed description of flexible shaft applications published in *M.E.* 2611, 7 June 1951, written by a then practicing dentist who explained the virtue of a drilling and grinding hand-piece design that allowed a 'writing position' (**photo 1**). This called for the barrel diameter to be preferably between 1/2 to 3/4in. dia. with a cover for the chucking device to allow the cutting tip of the tool (of whatever form) to be within 1in. maximum of the tips of the two fingers and thumb within which the hand-piece is held. It was recognised that the hand grip (**photo 2**) would be natural for larger barrel diameters for fettling, sanding, grinding, etc; such larger hand-pieces being standard on the heavier duty units on sale but, even so, a chuck hood can give better manual control.

Miniature hand-pieces

For miniature hand-pieces the chuck is usually of limited acceptance chiefly to grip the standard 2.35mm shank dental burs (**photo 3**) a detailed study of which was published in *M.E.* 3731, 15 June 1984.

For practical purposes 3/32in. is equivalent to the standard shank diameter. In the fifties literally handfuls of dental, used burs could be had for the asking from any dentist, these being perfectly efficient for metal work in drilling machines and other applications. However, these days have now gone as dentists currently use air driven devices with carbide or diamond cutters so that the traditional dental bur might well have become a speciality item. But happily the growth of miniature art and craft modelling has been such as to maintain the sale of standard shank tools, which are freely available in every form and shape. The original article gave details of the construction of a hand-piece similar to the dentist's model, but in retrospect the design could be regarded as unnecessarily complicated, so it may be useful to bring the whole subject up to date. All sorts of miniaturised, largely low voltage DC equipment, primarily for art and craft work are now available, including attachable, miniature flexible shafts, capable of being driven by any power source. The hand-pieces usually have limited acceptance chucks, which is of no great disadvantage as standard 2.35mm shank tools are principally used. Never the less not all of these makers have got round to the concept of a design that allows a 'writing position' application to give full control of the tool head.

Motors

The majority are series wound AC/DC types with a maximum no load speed of around 10,000rpm, the speed varying with load. In general the more powerful the motor (in terms of watts rating) the less the variation under load so that small or flimsy models, however high their no load speed are utterly frustrating and to be avoided at all costs. Intermittent rating motors, which tend to be more powerful for a given bulk and weight, are often suitable for our work as heavy-duty long duration runs are not usual with this sort of equipment. Speed variation is:

1: By a series resistance, which is basically an inefficient method as torque declines with lowered speed.

2: Thyrisor application (electronic) which is more expensive but now increasingly used.

3: By tapping the field winding so one can have a pre-selected speed with simple 'on/off' switching. This last type is unfortunately rarely found as a surplus item. Actually the operator of standard series motors learns, by pressure on the foot switch (an essential component as it contains the loading resistance) how he can more or less unconsciously maintain a useful 2,000 to 4,000rpm range and rarely uses different speeds. These motors have a good bulk/power/weight ratio though are somewhat noisy.

Capacity start induction motors

These are a useful alternative, running at a steady 2750rpm, which is perfectly suitable for a wide range of work, torque and speed remaining constant until stalling point is reached. The motor is silent and only needs an 'on/ off' switch which can easily be incorporated in a foot switch if so desired. The 2750rpm motors in the 1/20 - 1/8hp range are less readily available on the surplus market but *M.E.* advertisers can often oblige. All motors must be wired for anti-clockwise rotation viewed from the shaft end but this presents no problem for induction motors as the condenser connections are arranged accordingly.

Flexible shafts

These can be bought with attached hand-pieces with a drive spigot at the opposite end, capable of being gripped in the chuck of a power drill. This can be adequate but not very convenient, indeed once tried and the potential of the set up realised, the search will be on to secure a suitable induction or AC/DC motor of 1/8hp or less and connect it up as an independent tool.

The motor/shaft connector

If the spigot of the flexible shaft is the same as that of the motor drive shaft all will be well as any tube connector of sufficient thickness to house locking grub screws is all that will be required. But if the diameters differ absolute concentricity must be assured so that simply drilling through the work piece to the smaller diameter and then enlarging the outer half by drilling is to invite disaster. Do not ask me why, the experts will know. Instead drill and ream the circular work piece (of sufficient diameter to house grub screws) to fit the smaller diameter. If you have silver steel rod of this exact diameter and a collet so much the better, otherwise turn down a length of stock to allow a gentle push fit. Lock the grub screw, drill the larger diameter to 0.001in. or so under and then fine bore to size. When drilled for a locking grub screw a perfectly shake and vibration free link will result. Support for the flexible shaft outer casing can be given in various ways, for example a vertical wooden member fixed to a wooden base for the motor. Such a base can carry the switch gear and connections as appropriate (**photo 4**). This rectangular wooden base can have a stout hook at the free end opposite the shaft so it can be used

3

Two light hand-pieces with limited range chucks and of the type whose construction is described in the text.

4

A typical flexible drive installation using a board mounted motor driving a countershaft which, in turn, drives the shaft and also carries a cut-off wheel.

in the pendant position by attachment to a wall hook adjoining the work bench. This, incidentally, allows the shaft to fall naturally on the back of the hand and thus increasing the unfettered use of the hand-piece when used in the freehand mode.

With these points in mind currently available motorised kits can be evaluated, likewise flexible shafts themselves with or without a hand piece attached. If relatively heavy-duty work is envisaged miniaturised equipment will be unsuitable. However, for those working with small lathes a light flexible shaft with suitable motor and hand piece will clearly be attractive. This is not only because a large range of cutting tools with 2.35mm shanks are available for free hand use but also because the hand-piece, if of suitable design, can be fixed to the vertical slide (or the top slide) allowing every position for direct, angular, and radial drilling (**photo 5**). Construction of a suitable mounting block was described in *M.E.* 3398, 7 August 1970. Slotting in brass is possible using Nos. 8, 10 or 12 fissure burrs in the milling mode, but strictly any milling head should have minimal overhang and be much more robust and of different design than one arranged for drilling and free hand use. A parallel hand piece barrel is essential not only for lathe mounting use but also to accommodate the friction held chuck hood. This is usually made of thin Dural or brass tube with a split skirt and a tapered turned collar pressed into the front of it as this allows a comfortable finger position and good control of the tool head when used in the freehand mode. Commercial hand-pieces with limited acceptance chucks will sometimes not accommodate the whole length of the standard 1in. shank characteristic of the range and this can be reduced with advantage so that only the tapering part of the shank under the cutting head is free of the chuck face. Dental supply houses may have a similar range of short shank tool heads, burs, mandrels, etc coded as 'RA' but standard shanks can be easily cut down. Granted the availability of a flexible drive shaft (standard sizes are 4 and 6mm dia.) with its appropriate outer cable covering, the hand-piece if fitted may sometimes be found to be quite unsuitable in shape and dimensions for the purposes previously described. For this reason the following constructional details of a suitable hand-piece with limited acceptance chuck, plain bearings and a thrust race will meet all hand held and fixture needs. The dimensions are not critical though the barrel diameter should not exceed 3/4in. dia. if it is to be held comfortably in the hand;, To be preferred is 1/2 - 5/8in. dia. tube of brass or steel if thick walled varieties are available.

Barrel: Material as above, the suggested length is 4 1/2 inch. Clean up the bore with drill and/ or reamer and knurl as desired.

Spindle: 3/16in. dia. ground silver steel not to be cut to length till later.

Bearing Bushes: Phosphor bronze 5/8in. long and a light press fit in the barrel bore though they are not to be fitted till later, bored a bare 3/16in. dia. for later reaming

Rear Collar for Spindle: 3/4in. long with the diameter an easy clearance in the barrel bore. Drill and ream for spindle, which will be later cut down to seat in the proximal 3/8in. in the middle of this distance. Cross drill right through for 6BA tapping size (No. 44 drill 0.087in. dia.) and enlarge one half to 3/32in. (0.092in.) clearance, say 7/64in., which will give a good lead for tapping the other half. The need for this arrangement will be obvious later. The outer 3/8in. of the collar will accommodate the 4mm dia. flexible drive shaft which is simply soldered in.

The thrust race: Construction has been described before, but will bear repetition if a commercial one is not available in the size required. This consists of two turned washers (not stamped ones) with clearance for the 3/16in. dia. spindle and inner diameter of the barrels. Rub down dead smooth on the oilstone, heap Kasenit on one side of each and case harden. A single pass on the stone will clean up and show any warping. If distortion does occur, regrind and repeat. Turn and bore a piece of brass rod to the I/D and O/D of the washers. Select the number of balls to be used that will allow easy indexing, and of a size to be accommodated within the cage. Drill clearance holes for the balls, a drilling spindle on the cross slide being ideal here. Part off a width slightly less than that of the balls. You assemble the balls with grease and stick them on to the washers hardened side inwards, and put to one side until required.

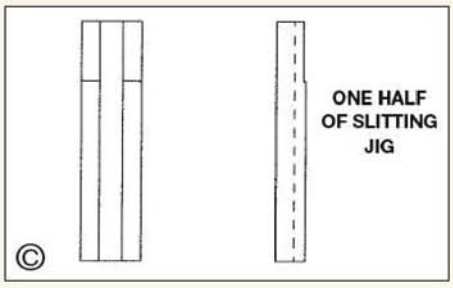

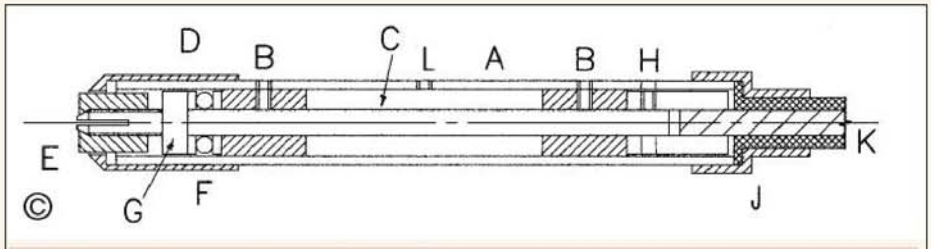

Key to general arrangement drawing above: -

- **A:** Barrel recommended length is 4 1/2in. with a diameter of between 1/2in. and 5/8 inch. The barrel can be knurled in the centre section and should be of thick walled brass or steel tubing.
- **B:** Phosphor bronze bushes, 5/8in. long, drilled and reamed 3/16in. dia. for the spindle. Turn outer diameters to a light interference fit in the barrel. Drill for locking grub screws in situ.
- **C:** Spindle made from 3/16in. dia. silver steel with the collet end threaded 3/16in. M.E. 40tpi for 3/4 inch. Collet hole drilled 3/32in. dia., 1in. deep. Extreme end tapered and split into four segments by 1/2in. deep saw cuts.
- **D:** Chuck hood made from thin brass or Dural tube with a split skirt providing a sliding friction fit on the barrel. Nose cap can be separate and made a press fit in the tube but providing clearance for the chuck.
- **E:** Chuck cap threaded 3/16in. M.E. 40tpi with nose engaging taper. Make 1/2in. long and knurl or provide spanner flats.
- **F:** Thrust race assembly.
- **G:** Spindle collar shrunk on spindle or locked by grub screw.
- **H:** Hole in rear of barrel for locking rear collar by Allen key and insertion of a tommy bar.
- **I:** Rear collar drilled 3/16in. dia. and cross drilled for 6BA locking grub screw on one side. Other side enlarged to 3/32in. clearance for tommy bar to lock spindle.
- **J:** Cap for outer covering of flexible drive shaft as slide fit on rear of barrel.
- **K:** Flexible drive shaft soldered into rear aspect of rear collar.
- **L:** 2BA oil hole closed by grub screw.

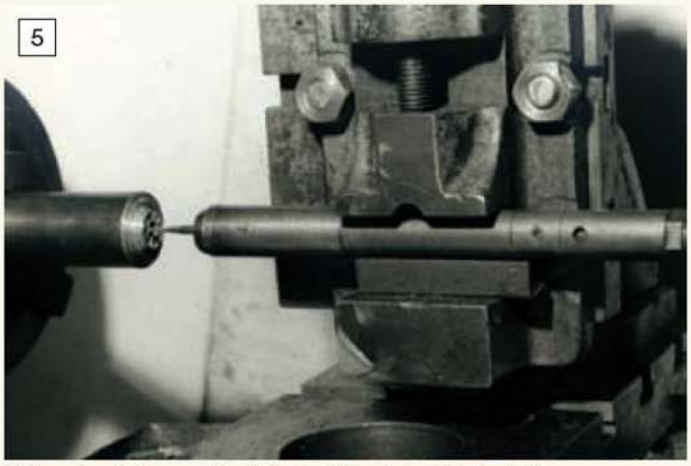

5

Using a hand-piece on the lathe to drill a circle of holes in the end on a piece of bar. A proper mounting block would be preferable to the vice.

6

A small, commercial flexible drive system with its drive motor, flexible shaft, hand-piece and foot operated control switch.

Spindle: Take a full length of 3/16in. ground silver steel and chuck dead true with somewhat over 1in. projecting. A collet chuck makes life more easy, of course. Centre with the smallest centre drill available and drill 3/32in. dia., 1in. deep feeding gently at high speed. Support with the half centre in the tailstock, and turn a taper about 1/4in. long (maximum) terminating at the mouth of the centre hole. The taper angle is not critical, it should not be too blunt, there is moderation in all things. Maintain the top slide taper setting but reverse it out of the way to allow the tailstock die holder to be brought up to allow threading of the spindle with a M.E. 40tpi thread. The taper will give a nice lead. A tailstock die holder is essential, turning the chuck by hand with the die fully expanded in the first instance. A 3/4in. length should be threaded. Some may prefer to do preliminary screw cutting in the lathe prior to sizing with the die as any suspicion of a drunken thread is to be avoided.

Slitting jig: Two short identical lengths of mild steel bar are taken, say 1/2 by 1/4in. or similar, placed together vertically in the machine vice and drilled right through at the junction line 3/16in. diameter. The pieces are separated and the adjacent faces marked off at 1/2in. deep and filed equally so that when put together there is just clearance for an Eclipse fine (Junior) hacksaw blade. The next operation is obvious, the threaded part of the rod is encased in the tidied section of the blocks held together in the vice and slit 1/2in. deep. The rod is then turned at right angles and the operation repeated.

Taper reamer (optional): It will be quite in order to reverse the full length of the rod in the chuck with say 3/4in. projecting and cut a taper, with the same top slide setting, to a point and then reduce to 'D' section, reamer form. Harden and temper as normal. The full length of the spindle rod will allow this final half inch to be done conveniently without affecting the rest after which a length of say 2in. can be cut off for later use.

Chuck cap: Chuck a length of brass rod and reduce an inch to the clearance size of the barrel bore. Centre drill and drill 3/32in. dia. one inch deep then enlarge the first half inch to 5/32in. dia. or No. 22 drill for tapping M.E. 40tpi with taper and plug tap held in the tailstock. The taper tap should give enough lead to allow the use of the plug tap, the chuck being turned by hand. If the taper reamer was made the stem is reduced to allow entry without damaging the thread and a slight touch given to the 3/32in. dia. hole to give it a slight taper lead but, if this step is omitted, check the diameter half way up the taper of the threaded end (probably 7/64 or 1/8in.) and drill accordingly. Part off a generous 3/4in. length and engage the threaded spindle. If all the thread is taken up skim the face until, when fully locked a spare thread is still visible. If in the fully screwed up position the split thread spindle nose is not visible unscrew the latter and skim the face to a point where, when screwed up, the split segments of the spindle are comfortably visible. This implies that the chuck cap is engaging the taper correctly. Theoretically the tapered version should give greater pressure engagement on the segments. However, in fact either version should survive the test of inserting a standard shank holding the spindle in one hand and tightening the cap with the fingers only. The shank should be firmly held for working purposes and run truly on the spindle. The chuck cap can be knurled or flats filed for a small spanner but I have never had to do the latter.

Spindle collar: This is a mild steel disc, 3/16in. thick, turned to clear the bore of the barrel and bored to a 'no go' for the spindle. It is then shrunk on in the usual way (spindle in the freezer for some hours, heat disc and tap on, holding the spindle vertically in the copper clad jaws of the vice using a small box spanner or piece of tubing over the disc. Do not do it the other way round as the disc will lose heat if laid on a metal surface and speed is of the essence. Those not accustomed to shrink fitting or feeling the need of extra security can drill the disc for a 6BA grub screw. It should be seated just below the last threads of the nose. Chuck the spindle truly once more and skim the opposing face as the thrust race will relate to it.

Assembly

Ream and/or lap one bush and measure the total width of collar and thrust race assembly, and tap in the bush to slightly further than this dimension so that the back face of the chuck cap is just within the barrel with enough projecting for finger tightening. Remove the spindle and drill and tap 6BA for locking grub screws. The centre of the barrel can then be drilled for a 2BA grub screw as an oiling point. The rear bush can then be tapped in slightly over 3/4in. to just enclose the rear collar and also locked by grub screw. The spindle can be tried in and if tight the rear bush reamed to allow a tightish and not sloppy fit, as it will soon run free in service. A plan drawing is then best made to determine where to cut off the spindle surplus and also to plot the hole in the barrel for tightening the rear collar grub screw on final assembly. This hole also allows insertion of the locking tommy bar (a drill shank) which, when inserted into the hole in the collar opposite the grub screw, holds the spindle while the chuck is finger tighten.

The cut off spindle should in fact protrude rather less than 3/8in. from the rear face of the rear bush. At this stage a rear slip on collar can be made for the outer cable of the shaft as shown in the drawing and left threaded on it.

All parts and swarf are thoroughly cleaned in paraffin with the aid of an air blast, oiled and assembled, the rear collar being then locked up to ensure no end play with its flexible drive soldered in. If any end play develops with use a shim is best inserted. The outer cable cover made friction tight is then pulled down and slid over the barrel. The sliding chuck hood has already been described but an alternative is to sink the spindle so far within the barrel that only the front face of the chuck protrudes, a couple of spanner flats being filed thereon. If the previous workmanship has been less than perfect this method may be essential as finger tightening of the chuck may be insufficient. Indeed where a small range of collet chucks are supplied, this is the accepted method and, with the chuck well buried, is a not unacceptable substitute for a chuck hood.

Foot switch: The illustration shown in *M.E.* 3742, 7 December 1984, is considered by some to be dangerous (see *Post Bag M.E.* 3748, 1 March 1985) but a hooded, hinged design actuating a micro switch or pressure plunger switch is considered acceptable provided it is wired with an earth lead if the enveloping casing is of metal. It should be emphasised simple on/off switching is only suited for constant speed induction motors, with the proviso below, and not series wound motors, where a loading variable resistance is an integral part of the foot switch. It can however be used for compound wound or tapped field motors, the latter being conveniently set for the favoured speed.

Provided the foot switch, of whatever design, is robust, electrically safe and sufficiently large to be kicked around and found and operated by the foot without having to look for it there is something to be said for fitting it to the larger machine tools particularly drilling machines. If grabbing or seizing up of an insecurely held work piece occurs then valuable seconds can be saved by releasing the foot switch and not lost by turning the eye to find the machine switch. This could make all the difference between no injury or more serious consequences.

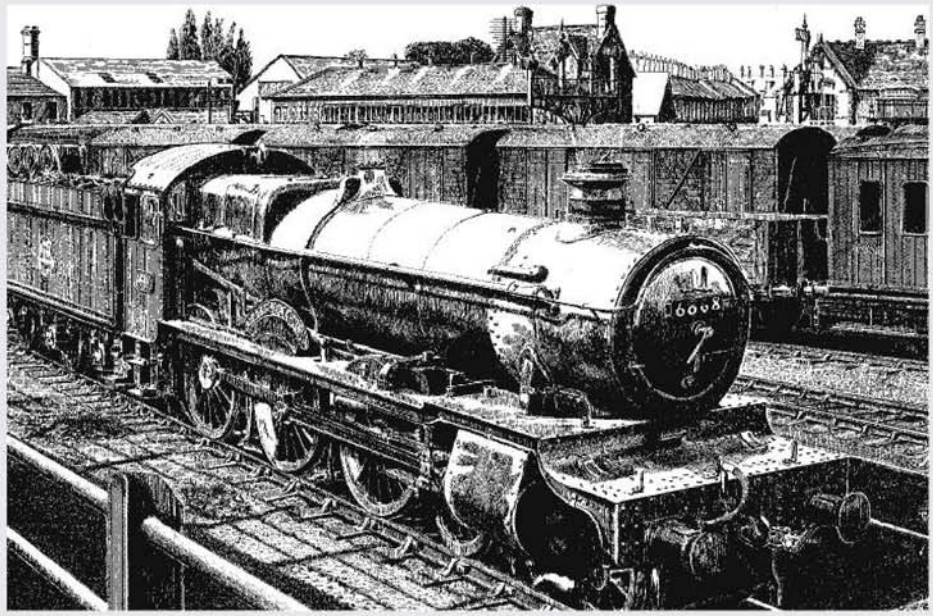

PENRHOS GRANGE

Neville Evans
continues the series starting with the plate springs and frames then comments on his visit to Sinsheim.

●*Part XV continued from page 148 (M.E. 4240, 4 February 2005)*

Although the original thinking behind this series of articles was that the loco should be based on Martin Evans' *Torquay Manor*, it has become obvious that the *'Grange'* has moved in a slightly different direction, and with the various options that are now offered, is far closer to a scale model than the original concept. A full set of working drawings is nearly finished for this engine, together with the GWR 3,500 gallon tender, which I think suits the locomotive particularly well. Further details will not be published in *Model Engineer* until the complete engine has been covered. The remaining 4-6-0s and the 4-4-0 'County' will be covered as a short mini series, together with other items of interest. The 'Schools' drawings are well under way, and will be published as a complete set of 'words and music', as the immortal LBSC was wont to say, when *Penrhos Grange* is finished.

The next item on the agenda is therefore the plate springs with horn cheeks and axle boxes to suit. A slightly modified frame is necessary to accommodate the near scale assemblies. Laser cut frame sides and of course full size drawings and castings for the complete series of engines will be available from Bruce Engineering. Note that some of the stretchers need to be shortened to clear the spring hangers. The leaf plates are made from spring steel, which is supplied in a softened condition, to facilitate drilling and bending to attain the finished shape. My procedure is then to assemble each spring and either, fix it into its buckle prior to heat treatment, or to assemble and bind the leaves with soft iron wire. Bring up to cherry red and quench in clean water. If it is felt that springs made in this manner will give too firm a ride, then by all means replace some of the inside leaves with a filler such as Tufnol. It is, after all, your decision.

Scale straight framed bogie

The full size 'Granges' and 'Manors' used the same bogie as the 'Hall' and 'Saint' classes, which has a flat top and is therefore much easier to make than the *Torquay Manor* variety in which the central stay has to be recessed by half an inch to clear the cylinders. It is therefore convenient to describe only one bogie and to modify the frames to suit. This modification is only possible when using the *Penrhos Grange* scale cylinders as recently described in *Model Engineer*. The bogie stay is also changed in that it now becomes a flat 1/4in. plate, tapped 6BA along the outer sides. I must confess to a few anxious moments when measuring the side play of said bogie, but with the new cylinders all should be well. Drawings and description of the new bogie will appear in the next part of this series.

Motion brackets and slide bars

Here are the drawings of the motion brackets and slide bars. Although I mentioned and described these pieces in the last gripping episode, there was not enough space to include any drawings. To briefly recap then, the motion brackets are available as lost wax castings and the slide bars are manufactured from 1/2 x 1/4in. gauge plate. This is a commercially available size and stock will be found at your friendly, local, metal stockholder (*Yellow Pages*).

Blast pipe and blower

These drawings are also left-overs from a previous article. Note that there are two separate arrangements of blast pipe and blower. The simple version, which incidentally I prefer and use myself, has a plain streamlined nozzle and a blower pipe that is merely placed to give the best possible draught up the chimney. The more complex multiple jet arrangement uses a fixed blower, which may be more to the taste of other people. Take your pick. I will repeat my instructions on forming the business end of the plain blower pipe, as I believe it to be of some importance. First, anneal the end to be swaged up by heating to cherry red and plunging into cool water. Push a short length of 1mm dia. stainless steel wire into the hole and gently beat the tube around it against a flat surface, while slowly turning it. When the tube is neatly closed up extract the wire with a pair of pliers. A suitable spark arrester, a necessary fitment these days, will be detailed in a forthcoming article.

A photograph showing the size and scope of the halls at Sinsheim.

The Sinsheim get together

A few weeks ago some friends and I went across to Germany to visit Sinsheim, a rather pretty little town about 40 miles south of Frankfurt, to take part in their steam get together. Although I had been told that it was big, I did not expect it to be quite so big, and while I had been told that it was different, I was amazed that it was so totally different to anything that I had ever seen before. The basic set-up is that this is a meeting of steam enthusiasts, originally set up by groups who wanted to run their engines inside in the winter months. It has therefore become a get together of drivers and builders, supported by the trade, rather than a trade show.

Five adjoining halls each of about 70 x 70m, four of which contained over 4km (that is over two and a half miles) of 5in. and 7¼in. gauge track, all laid on the cement floors of the halls. The track itself was of great interest, consisting as it did of pre-formed sections, bent to a predetermined radius and bolted together like any, far smaller gauge. The other hall was devoted to trade stands and gauge '0' and gauge '1' layouts, running both live steam, radio controlled and electric traffic. There was one continuous 5in. gauge line that weaved through all four halls. It took at least 10 minutes to complete a circuit of this section. There were spring-loaded points at regular intervals for access and manned, manually operated points for exiting the track. The space inside the track in one of the halls was devoted to a ladder and transit system on which 30 or 40 locomotives were continuously being parked and steamed. A second hall contained a steaming bay with turntable and a track oval whereon boys and girls of all ages from 8 or so upwards, were being instructed in the running and preparation of steam locomotives. In ▶

A view of the traverser and ladder seen in hall 3 and referred to in the text.

This is a view of hall 1 at Sinsheim and shows the turntable and steaming bay.

Starting young. A seven year old receiving instruction in hall 1.

another hall was laid the 7¼in. gauge railway, complete with its own steaming bay and display areas. Refreshment and drinks stalls abounded.

My first impression was that the Germans were making every effort to encourage and promote youngsters by using a 'hands on' approach under able and enthusiastic instruction. I carry an abiding memory of a 10 year-old taking 20 or 30 of his pals for a ride behind a vast Prussian 0-8-0, and of other stands seemingly manned by youngsters working stationary engines and running and steaming gauge '1' radio controlled locomotives. It seemed to be taken for granted that they were there and as much a part of the show, as were the others from 18 to 80.

An impressive 4-6-0 Swiss A3/5 compound photographed on the 7¼in. gauge stand.

Huge traction engines were being run around the halls and in fact it was convenient to follow them, when one was assured of a clear path through the crowds. I would think that of the hundred or so engines present, 90 were actually run on the track, including many that had been brought across from this country.

Could we do it in this country? Of course we could. Large halls with heating and decent floors are available in many of the agricultural show grounds. The track in 5in. and 7¼in. gauges is available in Germany. It certainly

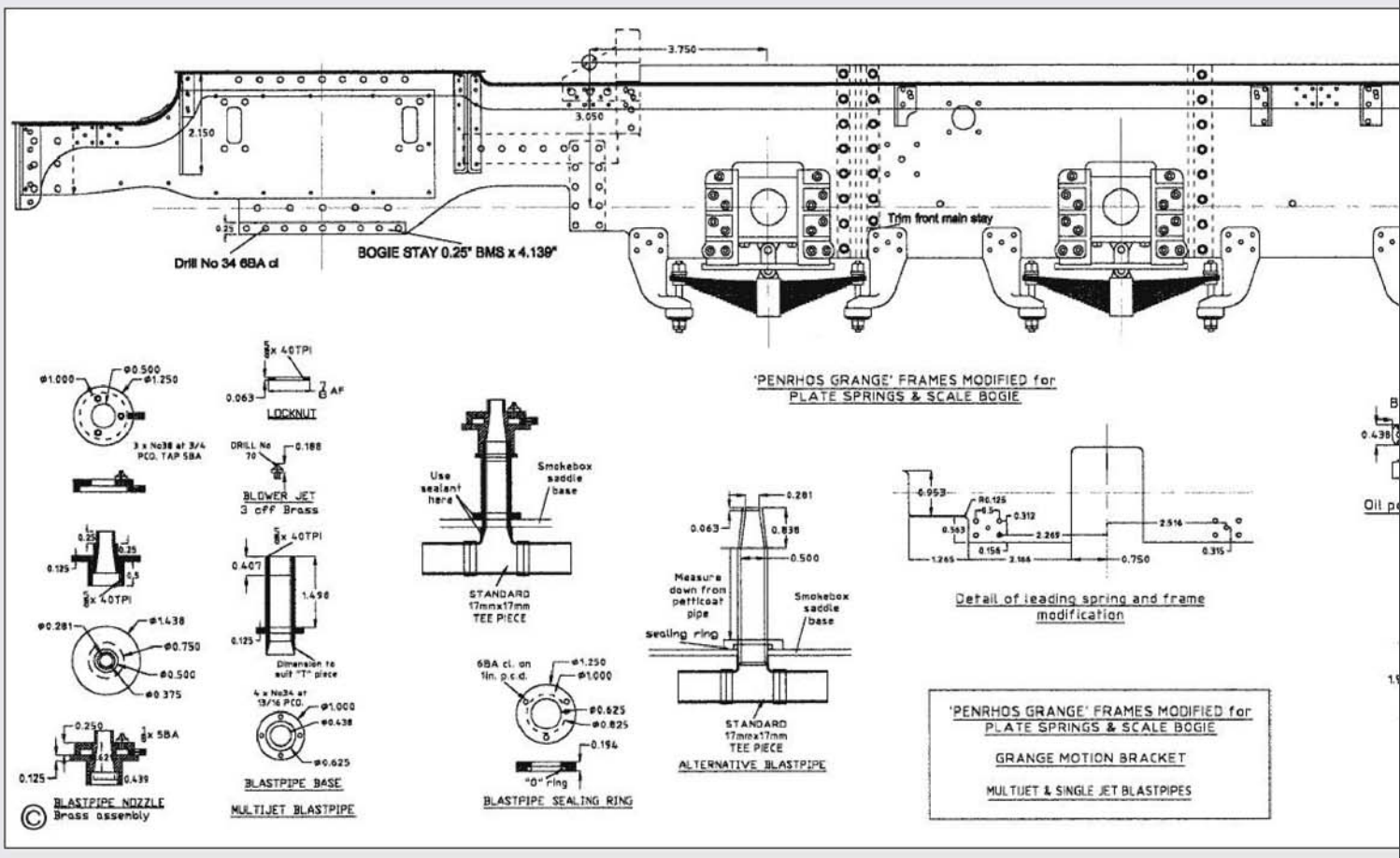

One of the large scale traction engines on display throughout the event.

Cosmopolitan? A Japanese driver with a British locomotive in Germany.

The well stocked Wilesco stand was a Mecca for boys of all ages.

is not kept at Sinsheim, so it is just a matter of a longer lorry drive. All it needs is the will to achieve the standards that our fellow EU members have shown us are attainable. The snags? The first problem that I can foresee is that our lawyers would be rubbing their tentacles together waiting for an accident to happen. Insurance could therefore be a hurdle to be surmounted. The Germans get over it however and we are at the moment enquiring as to how. On that point however I have just spoken to Tony Wood of Walter Midgely the insurance brokers. Tony informs me that in fact there is no lower age limit for young steam engine drivers in Great Britain. He says that their passenger carrying limits are confined to members of model engineering clubs and their own families. Presumably much the same ruling applies on the Continent. Whatever happens I can assure everyone that it certainly would be worth doing. Once you have seen and tried it you will never be happy with one of our hidebound, dreary productions again.

●*To be continued.*

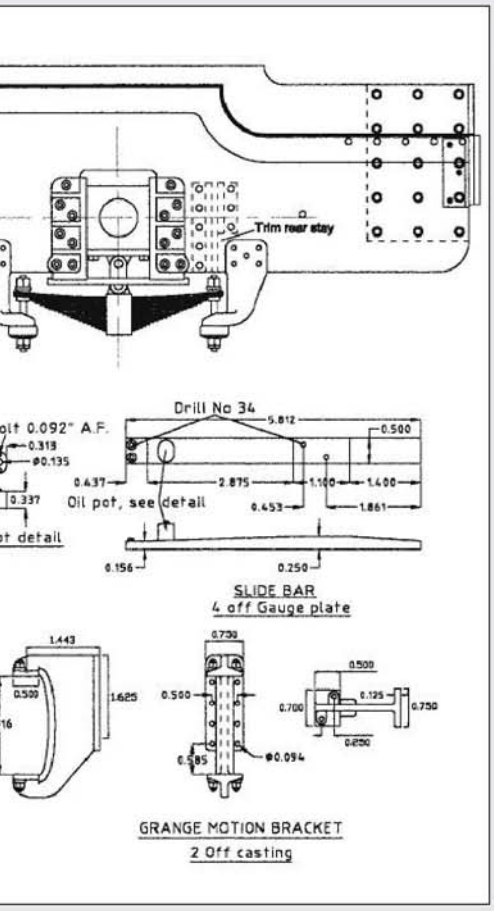

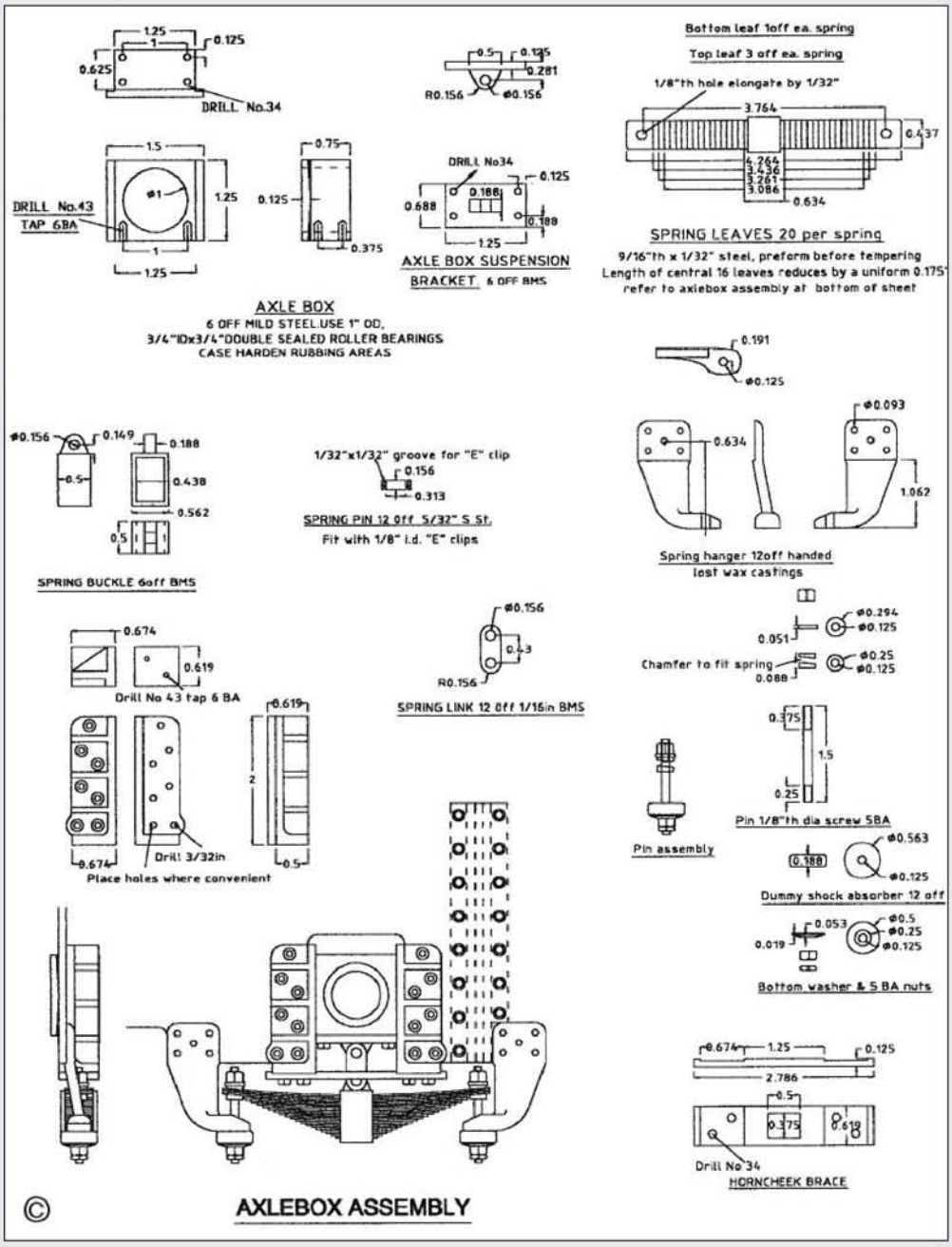

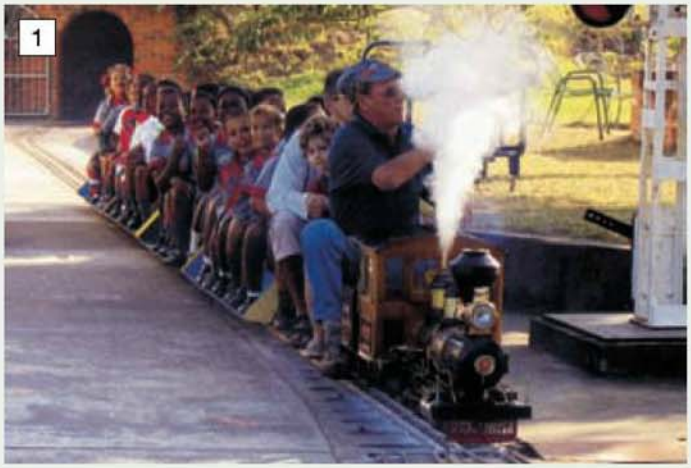

Alf Ogilvie driving his Baldwin 5in. gauge narrow gauge locomotive, built to the design of the author, at the Gonubie Agricultural Show 2004.

The author's 0-4-2 narrow gauge Baldwin locomotive seen here fitted with the spark arrester chimney.

OF BALDWINS AND SHAYS

Ron Etter
gives a brief report on some activities in South Africa.

In 1991 I decided to design and produce drawings of the Baldwin narrow gauge industrial type 0-4-2 locomotive for a 5in. gauge model. The drawings were all done on A4 and A3 paper, full size for the model and to a scale of 2½in. to the foot or approximately 1:5 scale. So far 17 model engineers have joined me in building the model. Ten are complete and running whilst the remainder are in various stages of construction. **Photograph 1** shows the first locomotive completed in 1995 and built by Alf Ogilvie. It is seen passenger hauling at the Gonubie Agricultural Show 2004.

Bruce Belbin of Australia restored a full size 2ft. gauge Baldwin locomotive and this was fully reported in the American *Live Steam* magazine. This locomotive *Fairymead* features a square headlamp and a spark-arresting chimney. A version with a stovepipe chimney was delivered by Baldwin to the Lourer Lafourdie Planting and Manufacturing Co, Ltd in Lousiana, USA. **Photograph 2** shows my own model with the *Fairymead* type chimney and **photo 3** what it looks like with the stovepipe type.

Over the years I have come to the conclusion that 5in. gauge narrow gauge is the ultimate size for the model engineer. You are able to construct the locomotive in the typical model engineer's workshop, all the various features can be made to work as per the prototype yet you have easy access to the cab controls. Such locomotives are also excellent passenger haulers, are easy and comfortable to drive with the added advantage that the smoke blows over your head. A brief description of my model locomotive is provided in the adjacent box.

Photograph 4 shows my latest project – a 5in. gauge narrow gauge Shay. This is also of my design and two are already complete and running with two more under construction.

5in. gauge Narrow Gauge Baldwin Main Features:

Width	18¾in.
Height	24in.
Length	51in.
Weight	350lb.
Diameter of driving wheels	6⅜in.
Diameter of truck wheels	4in.
Cylinder diameter	1⅝in.
Cylinder stroke	2¾in.
Slide valve	25% carbon filled PTFE
Stephenson valve gear	⅝in. travel
Boiler diameter	6in.
Grate area	42in.²
Number of radiant superheaters	4
Number of injectors	2
Rear tank capacity	14 litres
Coal capacity	4kg
Mechanical lubricator	
4-chime whistle 2in. dia. x 10in. long	
Bar frames at front, plate at rear	
Compensated leaf springs	
All gland packings and other seals PTFE	
Two crosshead boiler feed pumps	

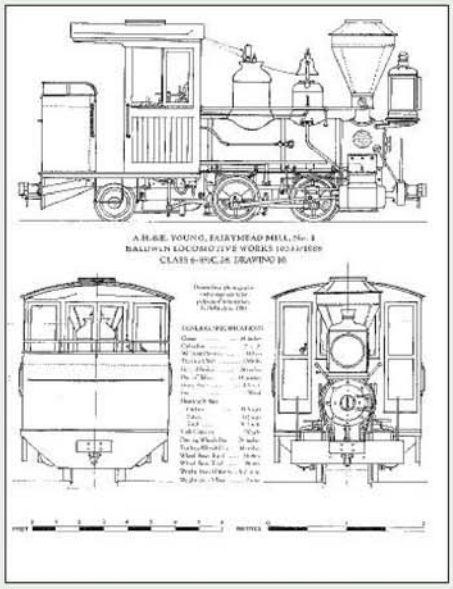

Another view of the author's Baldwin this time fitted with the alternative stovepipe chimney.

The author's latest project seen here under construction in his workshop. It is a 5in. gauge Shay locomotive.

A MODEL VOLKSWAGEN ENGINE

Brian Perkins
deals with the crankcase and connecting rods for this neat, powerful engine.

●*Part II continued from page 134 (M.E. 4240, 4 February 2005)*

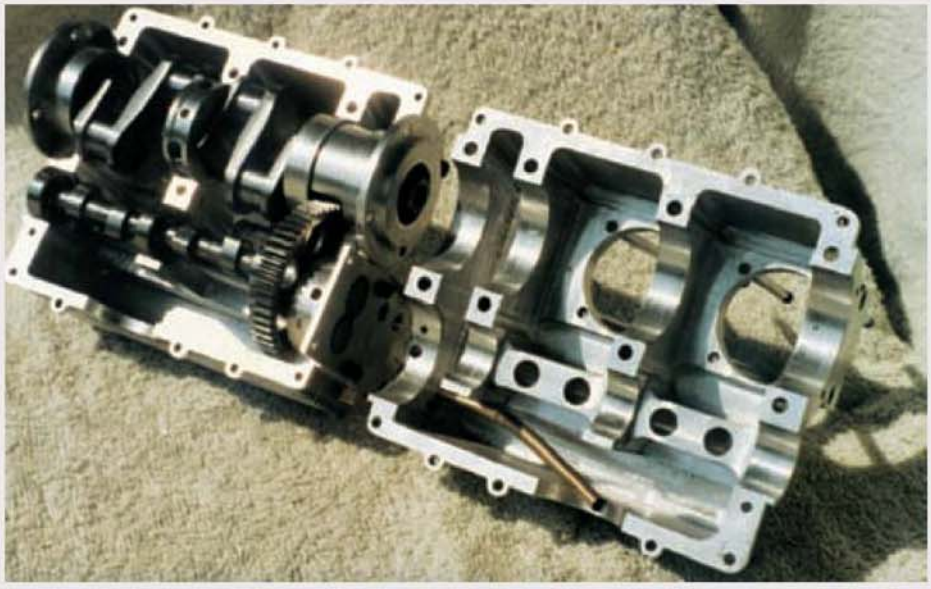

The crankcase halves split to reveal the crankshaft and camshaft. The complex shape was achieved by milling them from solid aluminium alloy billets.

I prepared two HE30 aluminium alloy blocks to the maximum size in all dimensions and made a drill plate with locating pins so that the necessary holes could be drilled in both blocks for fixing the halves together with locating holes for the cylinder and tappet bores.

The crankcase is designed with a wall thickness of 2mm so that there was a large amount of material to be removed from the inside of both blocks. This was done with a variety of milling cutters after having removed as much material as possible by drilling, which I find an easier way of removing metal. The main problem with this internal machining was the amount of swarf generated but I found frequent use of the vacuum cleaner enabled me to have a reasonable view of how things were progressing.

When this internal machining was complete, but before starting on the exterior, the two halves were bolted together using the previously drilled and tapped fixing holes and the complete block removed to the lathe where it was clamped to the cross slide for machining the main bearing and camshaft bores.

The main bearing bore was done with a between centres boring bar after preliminary drilling with the largest drill I could hold. I found ▶

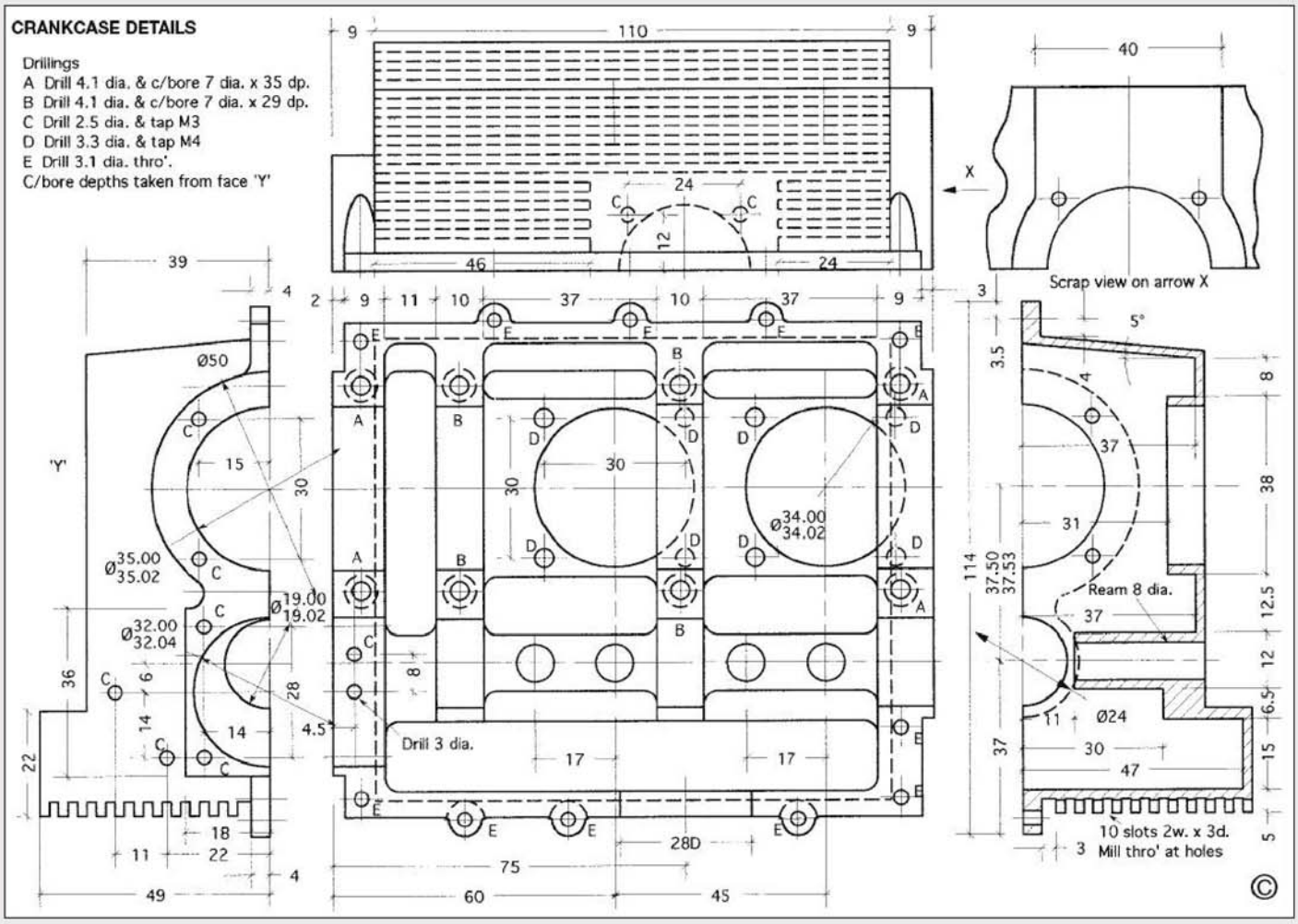

CRANKCASE DRILLINGS

Drillings
A Drill 2.5 dia. thro' & tap M3
B Drill 3.3 dia. thro' & tap M4
C Drill 3.3 dia. x 12 dp. & tap M4 x 8 dp.

Note
See other crankcase half and drilling plate for all unspecified dimensions

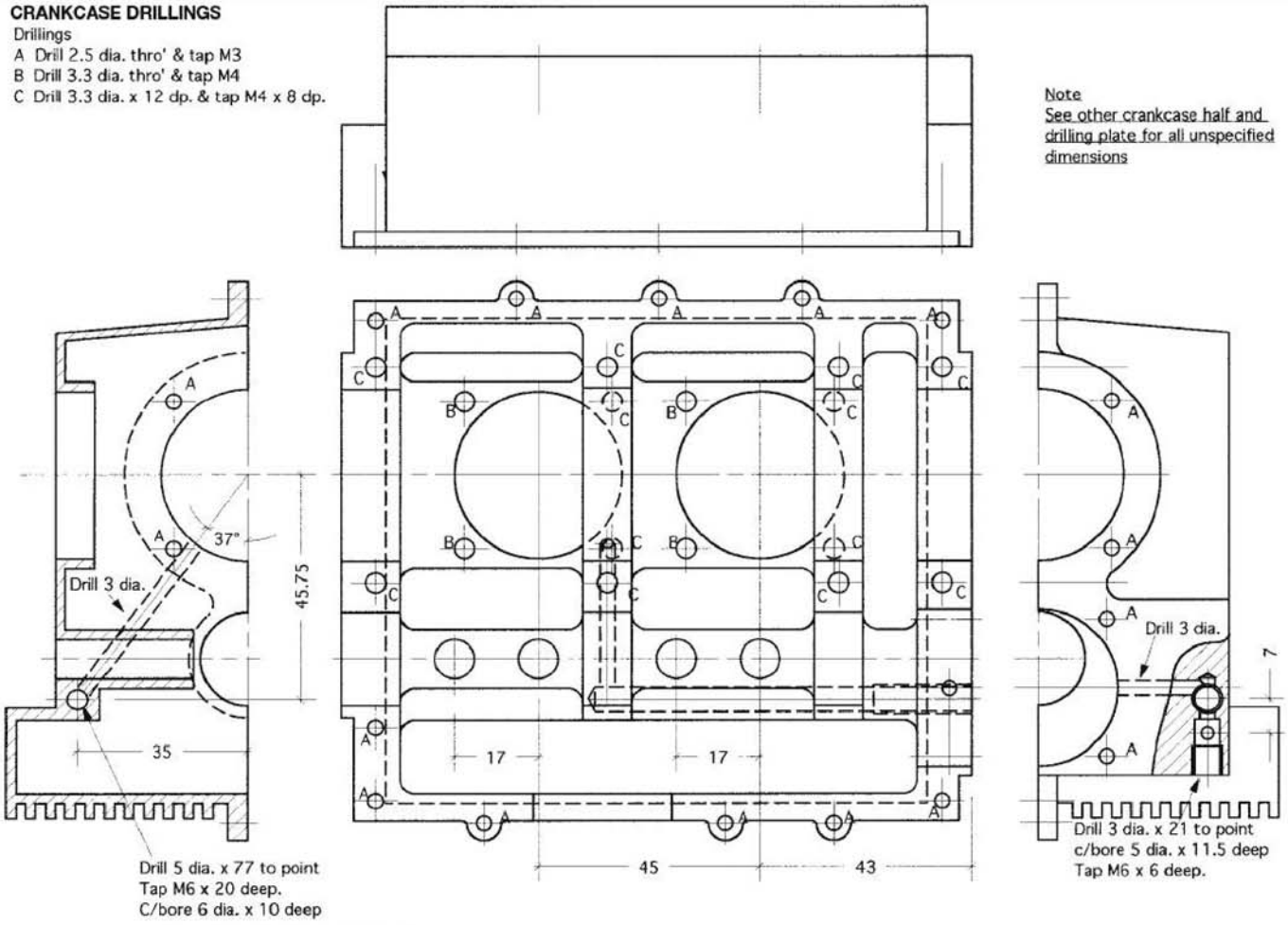

DRILL PLATE

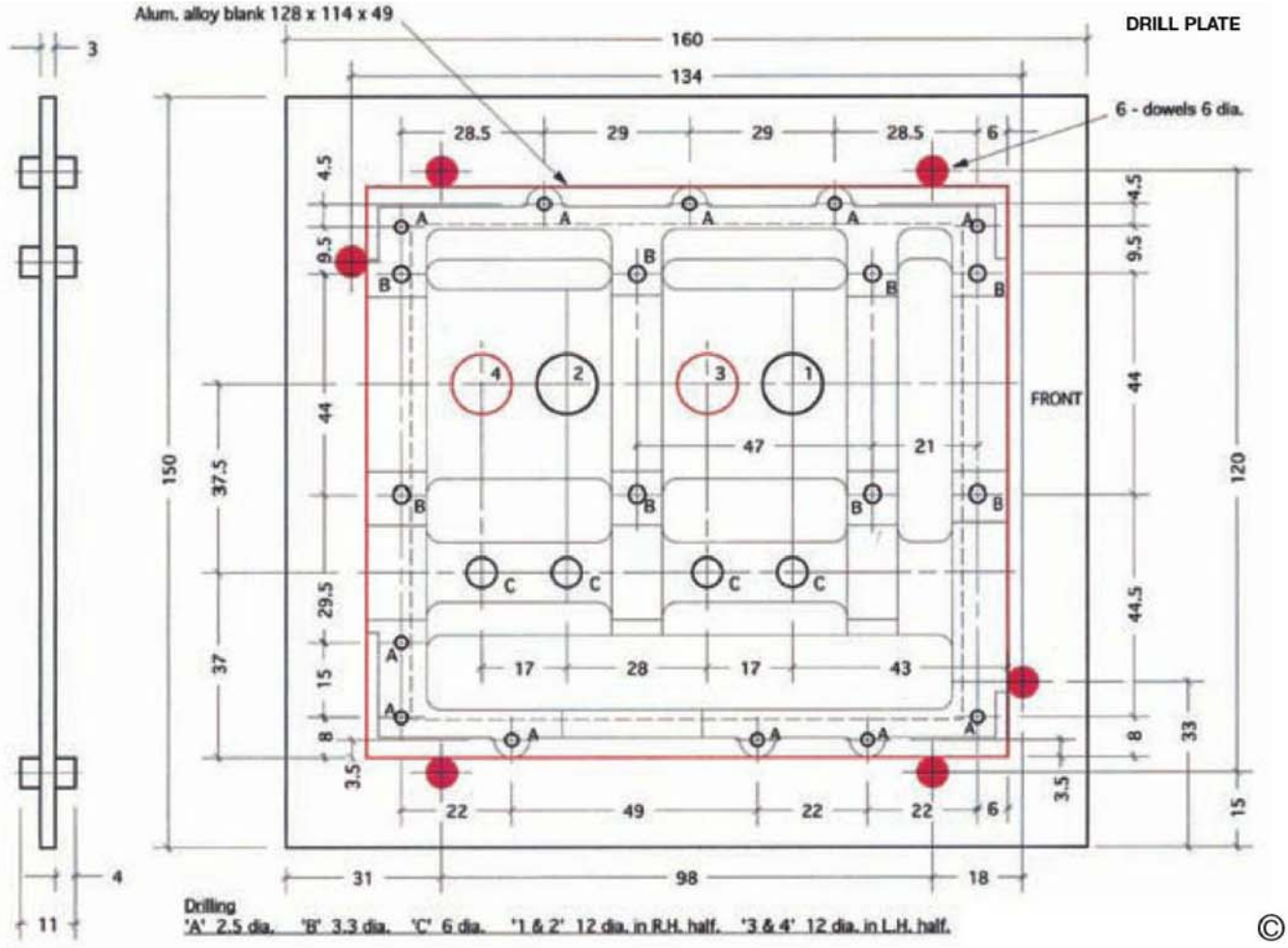

Drilling
'A' 2.5 dia. 'B' 3.3 dia. 'C' 6 dia. '1 & 2' 12 dia. in R.H. half. '3 & 4' 12 dia. in L.H. half.

©

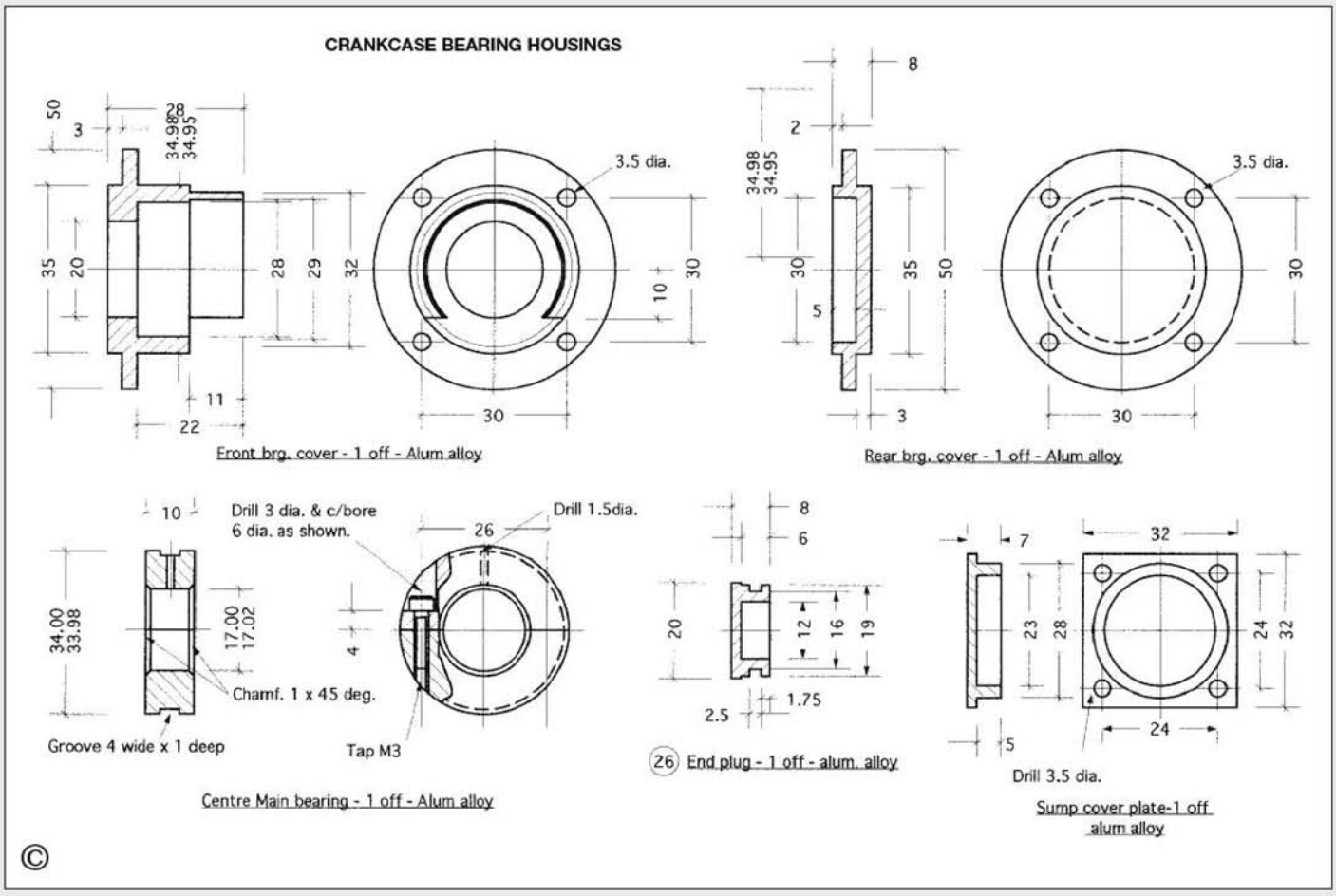

this operation very 'nail biting' due to the rather crude arrangement I had on my home made boring bar for adjusting the cut. However, after some time, I managed to achieve a nice, sliding fit on the ball bearings being used for the front and rear main bearings.

The cross slide was then indexed across and the camshaft bore was drilled and reamed. This was a much easier operation although, as became obvious when I came to assemble the timing gears, one where I had made the classic error of not checking the backlash in the cross slide screw so that the centres were 0.010in. too tight.

At the time I was blissfully unaware of this problem and carried on with the external machining of the crankcase. This involved picking up the locating holes for the cylinders and tappet holes and machining them to size and then starting to remove the excess metal from the exterior of both halves.

Another classic error now came to light. Do *not* draw only one half of a general arrangement. Due to the offset in the cylinder centre lines the rear most cylinder bore is outside the line of the crankcase as I had drawn it and to my horror it proved this by suddenly appearing as I was machining the back wall of the left half.

Professor Chaddock apparently had a similar problem when machining the crankcase for his 5cc single cylinder engine (*Model Engineer,* 21 April 1967) which he salvaged by sweating in a plug so with the benefit of modern adhesives and some cap screws a block was inserted and the cylinder bore re-machined. I could not face the thought of having to produce all that swarf again!

Connecting rods

The connecting rods came next. These were produced from rectangular section HE30, the first operation being to attach the embryo big end cap to the rod blank before boring for the big end. I produced a simple plug gauge to the crank pin diameter for checking this bore, and then mounted them on a locating peg on the milling machine in order to drill and ream the small end. By keeping the rods in their rectangular form up to this stage it was easy to ensure that the two bores were parallel and at the correct centres.

To produce the finished profile I worked out the machining paths by producing a large scale drawing to scale off dimensions and degrees of rotation for the circular table. I find that if you produce a drawing 10 x full size it is easy to work to 0.001in. for the actual component which is more that adequate for this type of profiling. I have always done this drawing by hand in the past but now, with the aid of the computer and my CAD programme the information can be read off the drawing automatically.

●*To be continued*

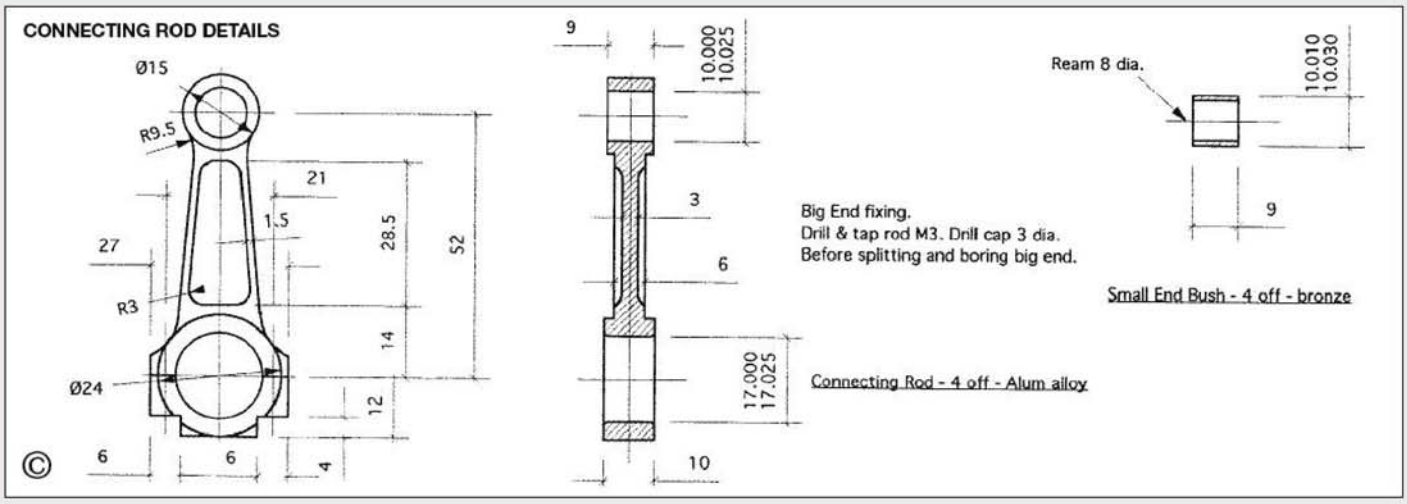

ROAD STEAM

Stan Nipper and Martin Wallis describe the steel plate wheels but start with some comments on hub caps.

● *Part VII continued from page 153 (M.E. 4240, 4 February 2005)*

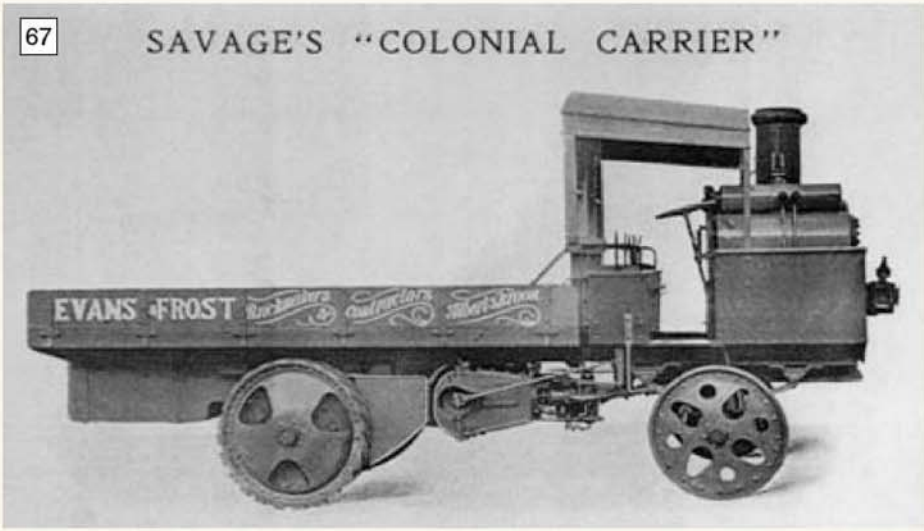

Savage's first design of steel plate wheels. Not the separate engine and gearbox fitted to their earlier wagons. The roof is functional rather than aesthetic but many wagons were sold with no roof at all.

SAVAGE'S UNIVERSAL CARRIER

Before making a start on the steel plate wheels a line or two may be useful on the subject of hub caps. If you visit any rally in the early morning you will find the engine crews with their tins of metal polish attending to the brass work of their prized exhibits. Hub caps are usually high on their priorities, a little easier to clean than most of the brass work as it involves no climbing or ladder work.

However, as a point of fact, very few working engines, including showman's, were built with brass hub caps. If required they were an optional extra. Hub caps are functional; they keep the dirt out and the oil in. The four Fowler 'Super Lion' showman's' engines, *Lion* in 1932, *King Carnival II* also in 1932, *Onward* in 1933 and *Supreme* (the last Fowler showman's engine to be built) in 1934 were surely the pinnacle of the engine world and still brass hub caps were listed as an extra. To be precise a Fowler sales note book lists a set of four brass hub caps to fit a Super lion, fully machined and polished, at £9. What a bargain! However, to be fair, for just £1,470-0s-0d you could buy the complete engine brand new and steam it down the road.

The hub caps for our model *Universal Carrier* are lost wax castings in brass or gunmetal, materials chosen for their casting qualities. The 'C' class wagons, of whatever wheel construction, each had a hub cap fixed by three studs and nuts. The caps should be painted, either to match the wheel or in black.

Steel plate wheels

Photograph 67 is from a Savage catalogue and shows a 'Savage's *Colonial Carrier*' with steel plate wheels. It appears that all the wagons made with steel plate wheels were exported, at least according to the sign writing on the surviving photos. That is not to say all export models had steel plate wheels as several examples were photographed with wooden, artillery style wheels and, again, several more examples with cast back wheels and artillery front wheels.

The two works pictures chosen show four different designs of steel plate wheel. A third picture I have is of a wagon sign written *N.Z. Farmers Motor Co. Ltd*, presumably for export to New Zealand, with the back wheel design from **photo 68** on all four wheels. This is the only wagon with steel plate wheels I have seen with the same design of wheel on all four corners.

The apparent divergence of design does, of course, give model engineers a free hand to interpret and select as he/she chooses. The wheels in photo 68 both seem to have two discs of plate, the method adopted in the drawings for the model, however the front wheel in photo 67 appears to be a single disc, more heavily dished for strength. I imagine the steel plate wheels will appeal to builders with access to plasma, laser or oxy-acetylene cutting facilities, at least one wagon builder is pursuing these options and it is hoped, in due course, that ready profiled blanks may be made available to others.

The hub for the steel plate wheel may be turned from steel bar and the wheel rim either fabricated from rolled strip and angle, or the angle sections and spacer rings could be turned up from thick walled tubing. The assembly should be all rivetted as per prototype; round-headed threaded fixings could be substituted if the builder prefers, with the nuts where they are not too visible. When rivetting it would be wise to at least undercoat the component parts first as when assembled, painting between the two steel discs could be problematical.

On the back wheel drawing, the rivetted location ring for the driving sprocket fitting must be fixed and machined concentric to the wheel bore. The 'tubes' for fixing the drive sprocket extension may perhaps be best locally silver soldered in place with oxy-acetylene as the joint is likely to be neater than if electric welded.

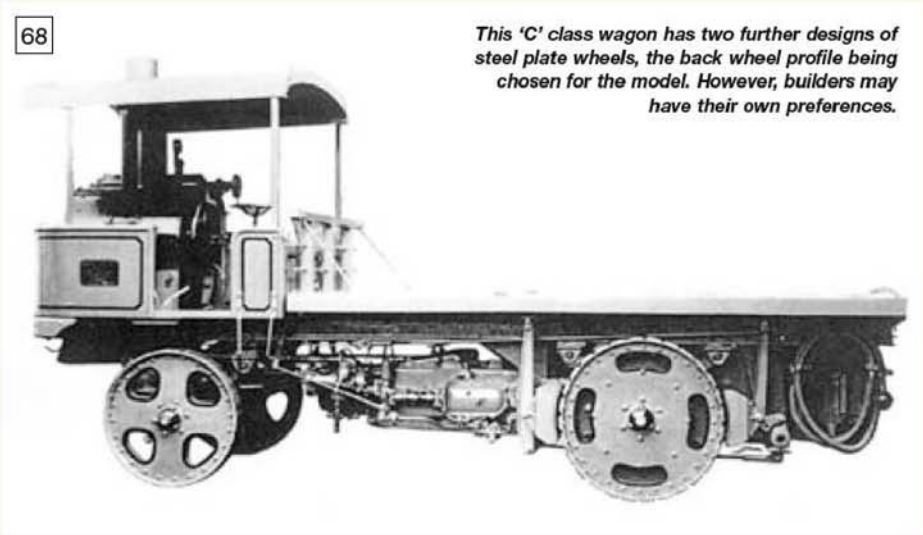

This 'C' class wagon has two further designs of steel plate wheels, the back wheel profile being chosen for the model. However, builders may have their own preferences.

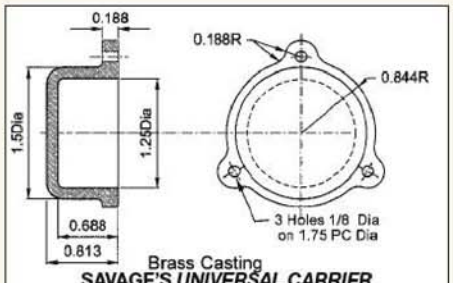

SAVAGE'S *UNIVERSAL CARRIER*
Figure 38 - Rear hubcap

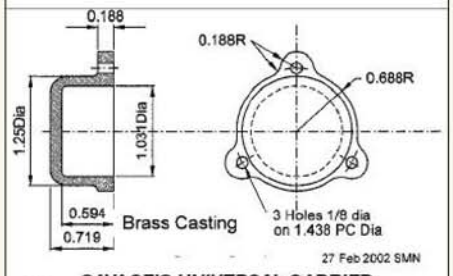

© **SAVAGE'S *UNIVERSAL CARRIER***
Figure 39 - Front hubcap

A pair of wooden wheels made in the traditional way by John Castle. Steel tyres will eventually be fitted (Photo: Stan Nipper)

An alternative approach is to make the centre part of the rim in one piece. Here the drilling machine is being used as a sander (Photo: John Thompson)

Pressing problem

The biggest obstacle in manufacturing a set of steel plate wheels is likely to be achieving the dished profile on the sheet metal discs. In photo 67 the dishing is unambiguous, the front wheel being a single piece of plate and the back wheel appearing to be a dished disc on the outside with a flat disc behind it, fitted with the relevant locations for the driving sprocket. Forming these discs will require a press of some tonnage, certainly not equipment to be found in a model engineer's workshop. The other alternative is to machine the dish from the solid which is not as bad as might first appear, but would still be a great deal of work.

The stakes fitted to the steel plate wheel are the same as detailed last time for the cast wheel, and likewise the chain drive connector is common to both. Before assembly the hole for the oiler must be drilled, remembering that it must line up with one of the windows cut in the wheel.

A virtue of the steel plate wheel is the ease with which the design(s) may be adapted to suit the materials and circumstances of the builder. With the right equipment they could be quite a quick build and of course the expense of castings is avoided.

Wooden wheels

The last wheel option offered to customers by Savages was the wooden or 'artillery' style wheel. Savage's built more wagons with this style of wheel than any other, particularly for the home market. Initially I imagined that the amount of work in these wheels would put folk off - but not so. So far three sets of wooden wheels have been made. As an aside the most popular design of wagon with model engineers so far is the flat bed lorry with said wooden wheels and a vertical boiler.

I must straight way own up to not having ever personally manufactured a set of wooden wheels. However the three sets of wooden wheels for which I have photos offer a wealth of information, and it is hoped that they will inspire and guide others. As ever my grateful thanks to the builders, all three wheel sets have proved very impressive, but it is worth noting that while the wheel sets might appear identical they were arrived at by rather different routes.

Wheel rims

Unfortunately available space only allows for a front wheel drawing, the back wheel will be included next time. The traditional wheel rim is divided into sections, called felloes, as indicated on the drawing. These felloes may be viewed in John Castle's superb pair of front wheels in **photo 69**.

There are five felloes on the front wheel, each one encompassing a pair of spokes. The back wheels with twelve spokes have six. Each felloe has two drilled holes to receive a pair of spokes. The ends of the spokes are turned individually to be a close fit in these holes. The turned end of the spoke, where it fits in the felloe, may be sawn longitudinally and a thin wedge driven in on assembly making a mechanically tight rim-to-spoke joint.

To make the hardwood felloes a decent sized band saw is near essential, happily band saws are very common and just about any career wood worker will own one. These days, to be on the right side of the law, safety certification is required to use said machine – so be prepared, have a template ready and be prepared to watch rather than do. Hopefully for the cost of a pint or ▶

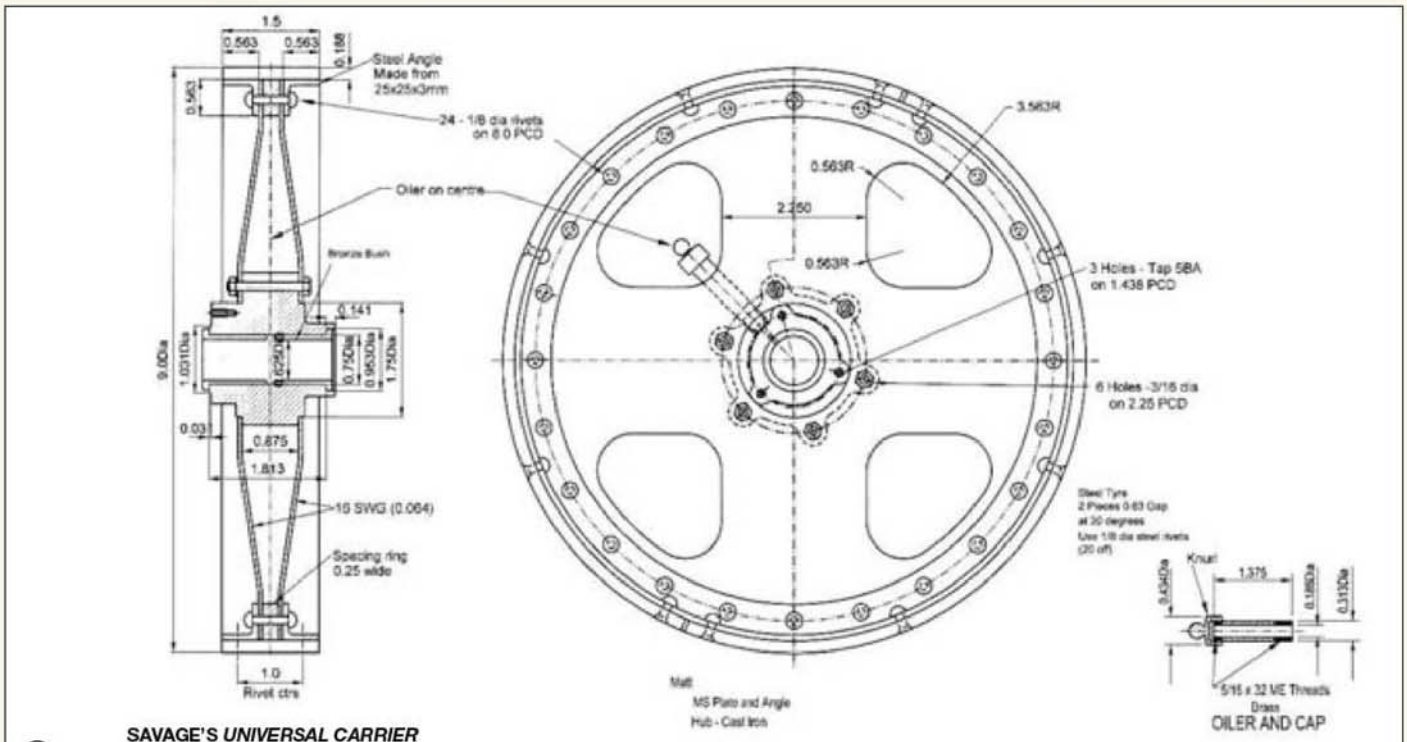

SAVAGE'S *UNIVERSAL CARRIER*
Figure 40 - Steel front wheel

Ash sections are then glued to the rim to give the traditional appearance. (Photo: John Thompson).

One of John Thompson's completed wheels on its axle. (Photo: Martin Wallis).

Rims can be cut on the jig saw by rotating the board around a fixed spigot (Photo: Cyril Hayler).

two all your wood will be prepared. It is important the grain runs along the length of the felloe so when assembled into a wheel the grain effectively is running around the rim.

A key feature in this traditional design is that once assembled the felloes are held tightly together by the steel tyre which is press fitted or shrunk over them. This puts the felloes into compression, the knock-on effect duly compressing all the joints in the rest of the wheel - pushing them firmly together. On assembly adhesive may be applied to the end-grain to end-grain joint between the felloes but rather more to seal the joint and exclude moisture than add to the structural strength.

Large disc

An alternative to the individual felloes is to simply cut out a single large disc of wood for the middle of the wheel rim. This method was adopted by John Thompson, his central large disc is seen being sanded in **photo 70**. In order to strengthen the short grain (where the grain runs across rather around the ring) sections of hard wood resembling the felloes were glued on each side of the central disc. These 'dummy' fellows are shown in preparation in **photo 71** and one of John's completed back wheels in **photo 72**.

Modern materials

An alternative, and entirely satisfactory, wheel rim may be glued up from modern materials such as plywood. Plywood is very easily purchased from any respectable DIY outlet. If possible buy marine plywood, but ordinary birch or far Eastern plywood ought to be sufficiently water proof for our purposes. Avoid exterior shuttering plywoods as while it is waterproof the laminates are usually coarse and roughly cut. Cyril Hayler's plywood rim, glued up from several layers of plywood, is shown in **photo 74**.

It is essential that a plywood rim is painted to disguise its construction. The plywood must be given a couple of coats of sealer, undercoated, and given numerous coats of paint. Several coats of paint will be needed, and with regular rubbing down no one will ever know the difference. Hiding the plywood construction is not as easy as might be thought.

Spokes

If a wood worker's band saw and a planer/thicknesser are available short work may be made of the preparation of the spoke material. Failing that a decent timber yard will hopefully prepare the section at little extra cost.

Cut the spokes off a fraction over long, perhaps 1/2in. or more if the material allows. The hub end of each spoke will need to be sanded first to the required angle, which is best perfected by trial and error. The two spokes at the back in photo 69 have already been angled off so they may be assembled with the others around the hub. If you do not get perfection first time, try again, that is why you cut the spoke off a little too long in the first place. A close study of the drawing shows a small wedge will be

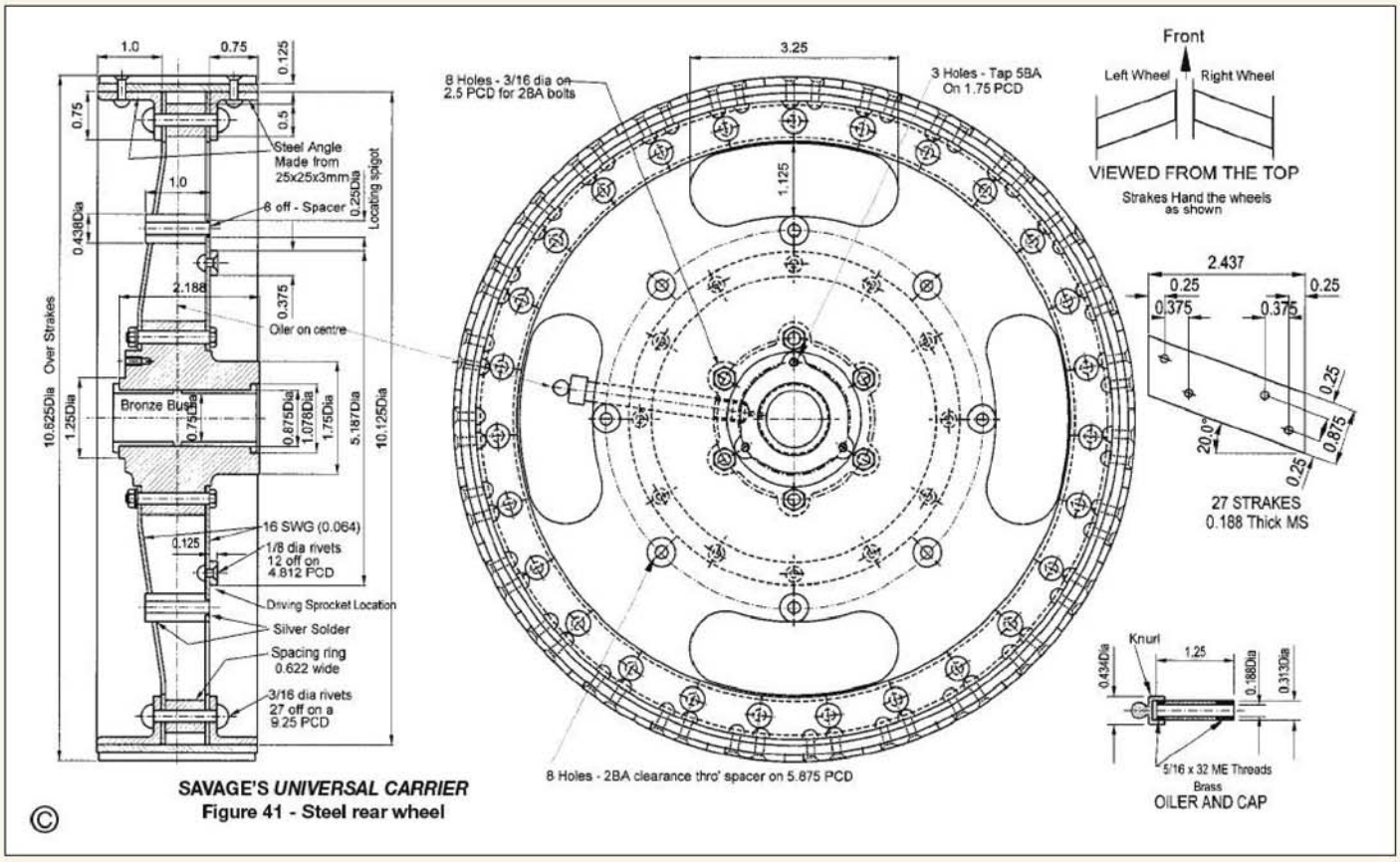

SAVAGE'S *UNIVERSAL CARRIER*
Figure 41 - Steel rear wheel

©

Several plywood hoops can be glued together to give the required rim section. (Photo: Cyril Hayler).

Spokes can be sanded 'en masse' using a hand held belt sander. (Photo: John Thompson).

A part built rear wheel. The inner spoke ends are clamped by the hub. (Photo: John Thompson).

needed between each pair of spokes to fill the gap. The wedges will eventually be retained by adhesive. I am uncertain if these wedges are prototypical but am advised fitting them is normal practice on a model.

To get repeatability on the angled ends of the spokes a sanding disc fixed to a lathe faceplate will be ideal. The sanding disc is simply made from a circle of plywood, as large as may be fitted over the lathe bed or in the gap. Glue to it a piece of garnet or glass paper, or use the ready prepared round self adhesive abrasive sheets. A small vice or rest is held in the tool post holds the spoke, the beauty of it being that the angular adjustment is built in - the top slide graduations.

If sanding in the lathe it is important to make arrangements to remove the dust. Hardwood dust is carcinogenic, and if that is not bad enough it will get all over your lathe and combine with the oil to make a 'gunge' which will end up everywhere. An ordinary domestic vacuum cleaner will do a grand job.

The spoke ends each need to be drilled 2BA clearance for the special hub fixings. With the spoke ends fitting snugly into the hub, well fitting wedges, and the additional retention of the two hub halves, a very strong wheel is assured. If small gaps persist it is probably best to finally assemble the wheel with a good gap filling adhesive such as Araldite. A suitable wood adhesive such as Cascamite may be equally good, but do not use PVA as is shrinks when curing.

Once a dry run fitting of the spokes in to the hub has been achieved the other end of the spoke may, as has already been mentioned, be marked out and turned to make a spigot which fits into the wheel rim.

If the rim is not in sections, i.e. it is one continuous ring the rim-to-spoke fixing has to be a dowel joint, with the dowel pushed in from the outside. Each spoke, rather than being turned at one end, needs a hole for a dowel instead. If the spoke were not thus it would not be possible to assemble the wheel.

The last remaining job on the spokes is to chamfer the four corners, a suitable set up on the milling machine ought to make short work of it. A true wood worker would naturally do it by hand, as John Thompson did - taking all of his spokes on holiday with him to the Country and Western Festival on the Isle of Wight. With 44 spokes to whittle no doubt he became somewhat of an exhibit himself.

Next time the hubs will be described, including a further method of fixing the spokes to the hub that was used by Cyril Hayler.

●*To be continued.*

Drawings and castings for the Savage *Universal Carrier* are available from: -
Little Samson Models, 38 Wheatsheaf Way, Linton, Cambridge, CB1 6XD
website: **www.littlesamson.co.uk**; e-mail **edward@littlesamson.co.uk.**

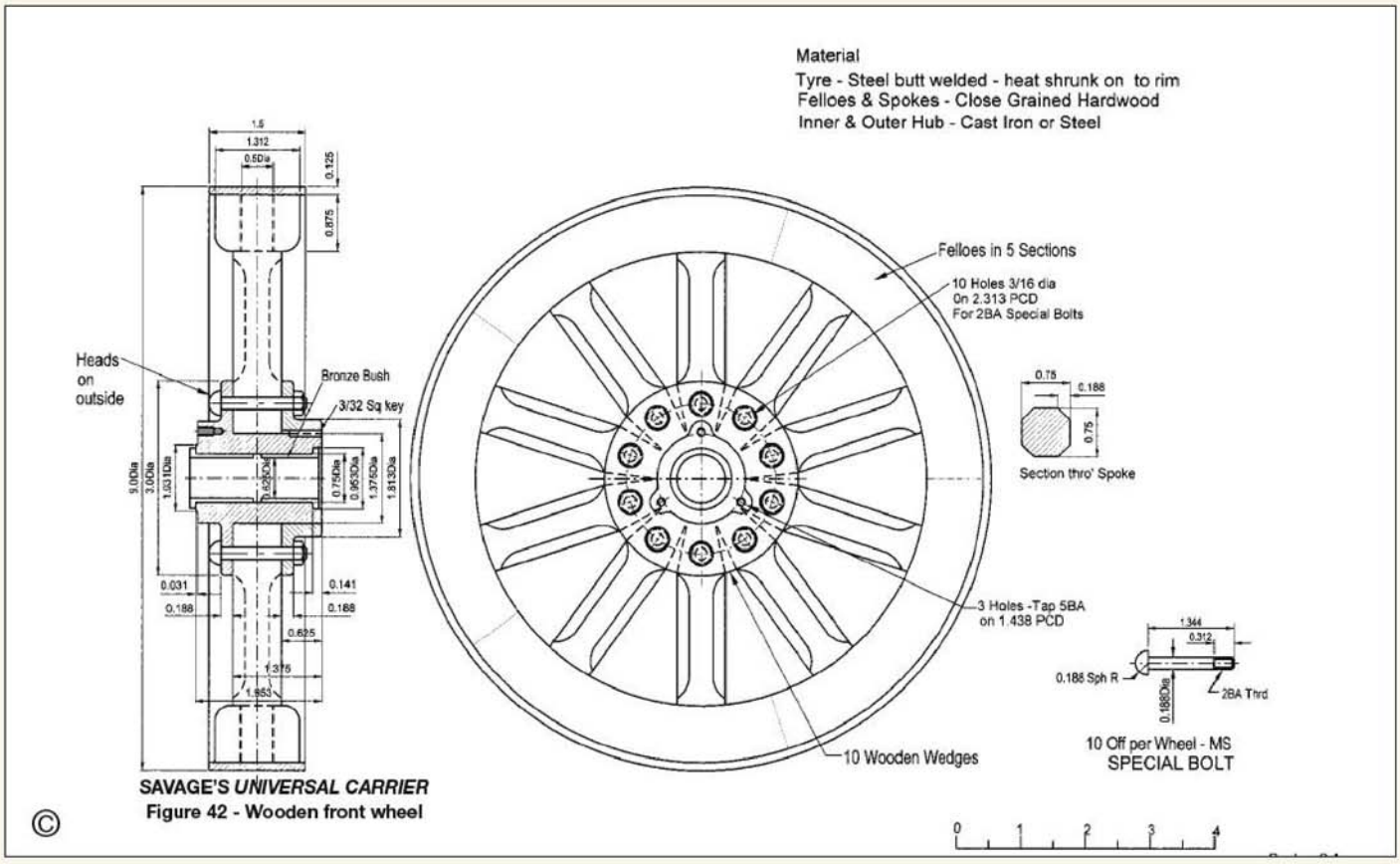

SAVAGE'S *UNIVERSAL CARRIER*
Figure 42 - Wooden front wheel

©

David and Frances Mayall behind his 4F. (All photos: Sue Parham & M. Chrisp)

First man on the track was Brian Apthorpe with his 5in. gauge Klipspringer.

SOUTHERN FEDERATION AUTUMN RALLY 2004

Sue Parham
describes this event hosted by the Maidstone Model Engineering Society in their 75th Anniversary year.

Maidstone previously hosted Southern Federation Rallies in spring 1974 and autumn 1978, so the celebration of the club being 75 years-old seemed a good reason to host another rally after so many years. Maidstone club has a lovely setting in Mote Park, Maidstone, with wide stretching views over a lake, trees and parkland. The club has nearly 1,900ft. of aluminium 3½in. and 5in. gauge track, a third of which was stolen by vandals in the early spring of this year. Much hard work ensued from the members in replacing this, and fortunately no further theft has occurred. Crime is a problem many clubs face, in particular if they are located in a public park; vandalism is far too often an unwelcome feature.

The weather on 18 September 2004 was mixed; rain, cloud, sun, then cloud and rain again as the evening approached - a typical British day, but not too cold. Maidstone had put on a tremendous show, with a huge marquee displaying the work of the members. An exhibition of this size and standard would usually attract a charge, but no, this was free to all visitors. The number of models was amazing, with over 30 locomotives as well as stationary engines and road vehicles. The standard of work was impressive. There was also a 00 gauge layout constructed by the younger members of the society. If pictures and details on most of the models were included here, it would fill most of this issue. One end of the marquee housed the catering and tables and chairs, so visitors could sit and chat, eat and drink, and gaze at the display. The ladies of the club kept a continuous supply of excellent food and drinks on offer so nobody went hungry.

Paul and Norman Clark with steam car Florence.

The track was strictly for the visitors, but up on the road by the Clubhouse, Maidstone members Norman Clark and his son Paul had fired up their steam car named *Florence*. This was designed and built by them both, and *Florence* represents the outward appearance of a steam-powered horseless carriage of about a century ago. Norman and Paul have used modern materials and methods in order to prove reliability and safety. It is not a replica of any particular vehicle, but appears outwardly similar to the USA Skene steam buggy. The boiler, carried at the rear in an enclosed compartment, has 400 vertical fire tubes, and the engine has Joy valve gear.

Some 22 locomotives ran on the day, representing some 18 societies, so alas there isn't room to mention everyone. The first locomotive to take to the track just before 11am was Brian Apthorpe from North London Society of Model

Arthur and his Chatterbox *(oh, and the Mrs too!)*

Editor Mike Chrisp drives Coeur-De-Lion *with Len Steele in attendance.*

Ron Manning, with Keith Catchpole behind, on Gamecock *an 0-4-0 Peckitt.*

John Percival and John Wimble on GWR City of Truro, *number 3440.*

Engineers, with his 5in. gauge black B1, number 8308 *Klipspringer*. Brian bought the model as a complete wreck in 1989 at an auction, and gave it a complete rebuild, which took him two years. He has given the engine plastic piston valves, which he reports have never given him any problems. He had an enjoyable run on the track, retiring only at lunchtime. He said he's never entered any competitions with the locomotive, which is probably why it has never won anything!

David Mayall of the Bracknell Society had brought his immaculate 4F, the only 3½in. gauge locomotive to attend the rally. Built to the Don Young design with few alterations, it took him 4½ years to complete and won best 3½in. gauge locomotive in IMLEC at Kinver this year. His wife Frances had brought her own locomotive, only to find the boiler certificate had just expired. You could visualise her saying *"just wait till I get you home dear!"* but she was philosophical about it all, as they had been away from home on holiday all week, attending the Birmingham rally the previous weekend. She had a few turns driving on her husband's locomotive instead. David steamed up twice during the day, total running time over three hours, proving that the little 'uns are just as game as the big 'uns

Len Steele from the Guildford club holds the record for being on the track the longest over the weekend. He totalled over seven hours in steam with *Coeur-De-Lion*, the 5in. gauge Britannia he bought from Lionel Flippance in 1988. The locomotive was constructed in 1983/84. Len says he has tried to wear it out ever since he bought it from Lionel! He has clocked up an impressive 1,500 miles in four seasons with the locomotive, which has also been placed in IMLEC at least three times, taking a first in 1997 at Llanelli. Len was able to persuade a certain visiting editor to have a drive.

Ron Manning from Chingford brought his 0-4-0 Peckitt, named *Gamecock*, for a run. Alex Lane built this model in 1980, to the Australian design serialised in *Model Engineer*. Ron re-boilered and detailed the locomotive in 1991, fully detailing it like the original. Ron tells us that Peter Peckitt is the only surviving locomotive of its class in Australia and still runs on a preserved line there. Today, Gamecock clocked-up over three hours running time on the Maidstone track. Ron, it should be noted, attended the last autumn Southern Federation Rally held at Maidstone, back in 1978, when he won the Kenneth John Prize, so it was especially nice to see him 26 years later, not looking a day older!

Leeds was the most northern society and was represented by Arthur Bellamy with his Don

Brian Thompson about to present the Australia Award to John Peterson.

Young Hunslett, another 0-4-0 locomotive, which he built himself. It took him a decade and was finished in 1993, and he has a picture of his brother standing on the footplate of the full size locomotive in a quarry. Arthur called his model *Chatterbox*, which he says is named after his wife, but also added that she's finding the joke wearing a bit thin now! His run was later on the Saturday afternoon, somewhat curtailed when the downpour started, but as he was staying all weekend he was able to have another run on Sunday morning.

Amongst the local clubs supporting the event were Romney Marsh, and one of their members, John Percival, had brought his GWR *City of Truro*, number 3440. This fine locomotive was finished in 1995, but was sporting a new, but not quite finished, tender. The original tender was

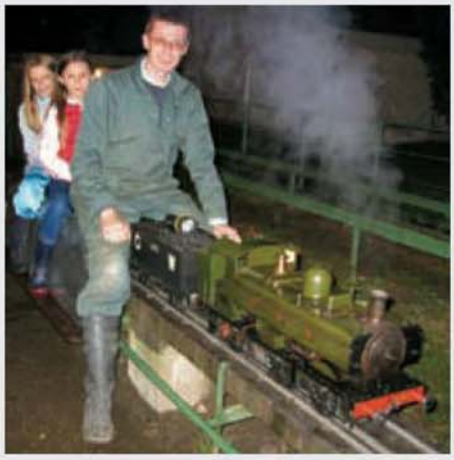

Jeremy Lewis with daughters Sarah and Harriet.

constructed of steel but had only lasted eight years; hence John had put together the new tender in brass. However, the green of the engine and that of its new tender differed, proving that over a ten year period paint shades can alter, so John was resigned to the fact he'd have to get his paintbrush out again.

Winner of the prestigious Australian Association of Live Steamers Trophy this year was John Peterson from Norwich. This annual award is presented at the Autumn Southern Federation Rally to the model steam locomotive judged to be the best working example of a Commonwealth Prototype. John had brought his 5in. gauge North London Railway Inside Cylinder 4-4-0 to run at Maidstone. This model had taken him six years to build, finally finished in 2001, when it then was awarded a first prize at the Midlands Model Engineer Exhibition. John also tried his hand with the locomotive in IMLEC, coming 6th the following year. He has given the model a combustion chamber and the original Adams bogie with rubber side control. A beautiful looking model, it well deserved to win, although John wasn't expecting this and was therefore pleasantly surprised! Southern Federation Chairman, Brian Thompson, presented the award.

As Reeves 2000 had withdrawn from the rally giving little notice, Kent Scale Engineering and Supplies, a recently formed company based in Sheerness, were kind enough to step in at the last minute and support the rally with a marquee full of goodies. Various male members were seen to disappear in their general direction, brandishing their wallets with the parting words *"Won't be long, dear!"* to their other halves.

Rain stopped play just before 5pm, but more than 50 people assembled in the marquee at 7pm to enjoy the local fish n' chips and a range of magnificent puddings. With the rain bouncing off the roof and sides of the marquee, it was very cosy and Maidstone members were more than a little relieved they hadn't decided to do a barbecue. The odd alcoholic beverage helped the evening go with a swing. However, the comfortable surroundings inside versus the dampness outside tended to persuade anyone with the intention of an evening run against the idea. All that is, except Maidstone member Jeremy Lewis, who now lives in Buckinghamshire and so cannot get down to Maidstone very often. Jeremy had begged and borrowed the GWR Pansy from his Dad Dennis for the weekend. He was the last of the day on the track, steaming up and running for a good couple of hours, finishing the rally day in style.

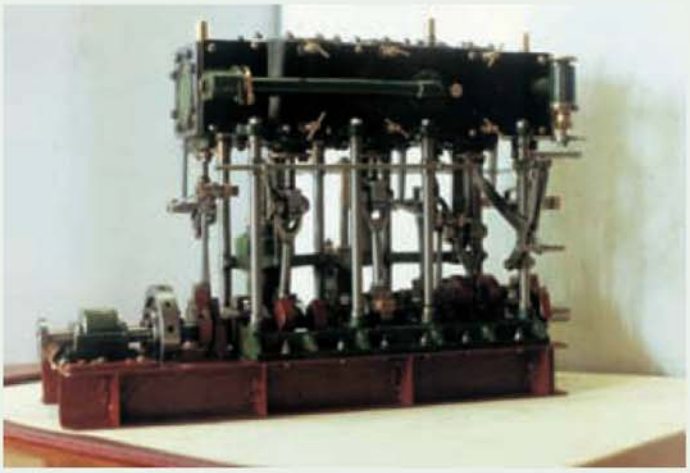

The author's second Stuart triple expansion marine engine showing some of the modifications referred to in the text.

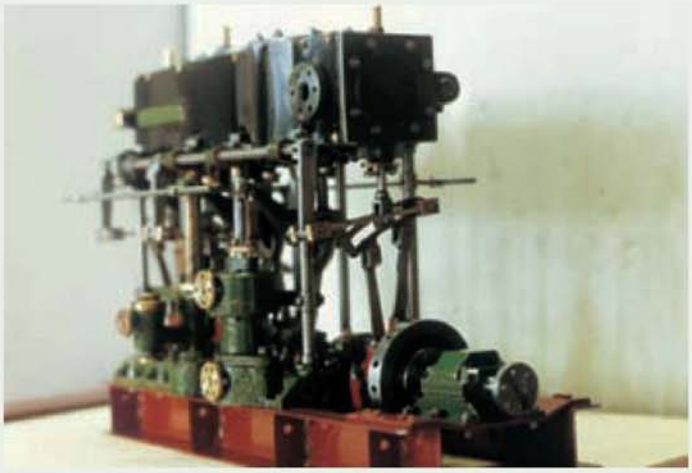

A view from the other side. The item nearest the camera is the model of the Mitchell thrust bearing assembly.

SOME THOUGHTS ON THE STUART TRIPLE

R. R. May

describes some of the modifications made to his version of this popular marine engine.

Many Stuart triple expansion marine engines must have been built over the years, some of which have been featured in *M.E.* from time to time. But, few of these have shown any attempt to break away from the Stuart design, although the individual components and their proportions offer scope for making something more representative of a full sized small marine steam engine in its final form.

The design is typical, I suppose, of the 1890s. However, time has moved on more than one hundred years since then. Not only have model engineering practices and facilities shown vast improvements since that time but great improvements in engineering design, materials and techniques have also taken place. The more experienced model engineer of today could be therefore be expected to look on a 100 year-old design with a somewhat critical eye and must decide if his model is to be a relic of the past or one more in tune with later engineering developments.

However, whatever decision is made, let it be remembered that all full-sized marine engines were, are, and always will be made to drive ships. A model of such engines should always show its relationship to the rest of the ship and the way in which it would be installed and adapted to the needs of the ship's propulsion. Remember, vast numbers of people nowadays could not tell the difference between a marine steam engine and a moon rocket.

The photos and sketches show my second attempt at building the Stuart triple, the first one being described in *M.E.* 3659, 19 June 1981. Both are to a scale of 1in. to the foot and are made up from the standard set of Stuart castings.

First, some comment on the 'space framing'. Its main advantage is; of course, its light weight compared with the more usual cast iron columns. This caused it to be used for some smaller naval engines where weight was important. Its big disadvantage was its lack of lateral rigidity, even when heavily cross-braced, for larger engines. In consequence, the Stuart triple should never be made to look like a large engine because of this feature alone. Following on from this, the wheel and screw reversing arrangement is wrong. Wheel reversing or a power operated reversing gear was universal on large engines but for small engines the shifting of the links was usually done with a hand lever.

The proper working of a triple expansion condensing engine requires a steam pressure of 150psi or above and by the turn of the last century piston valves were the usual dress for

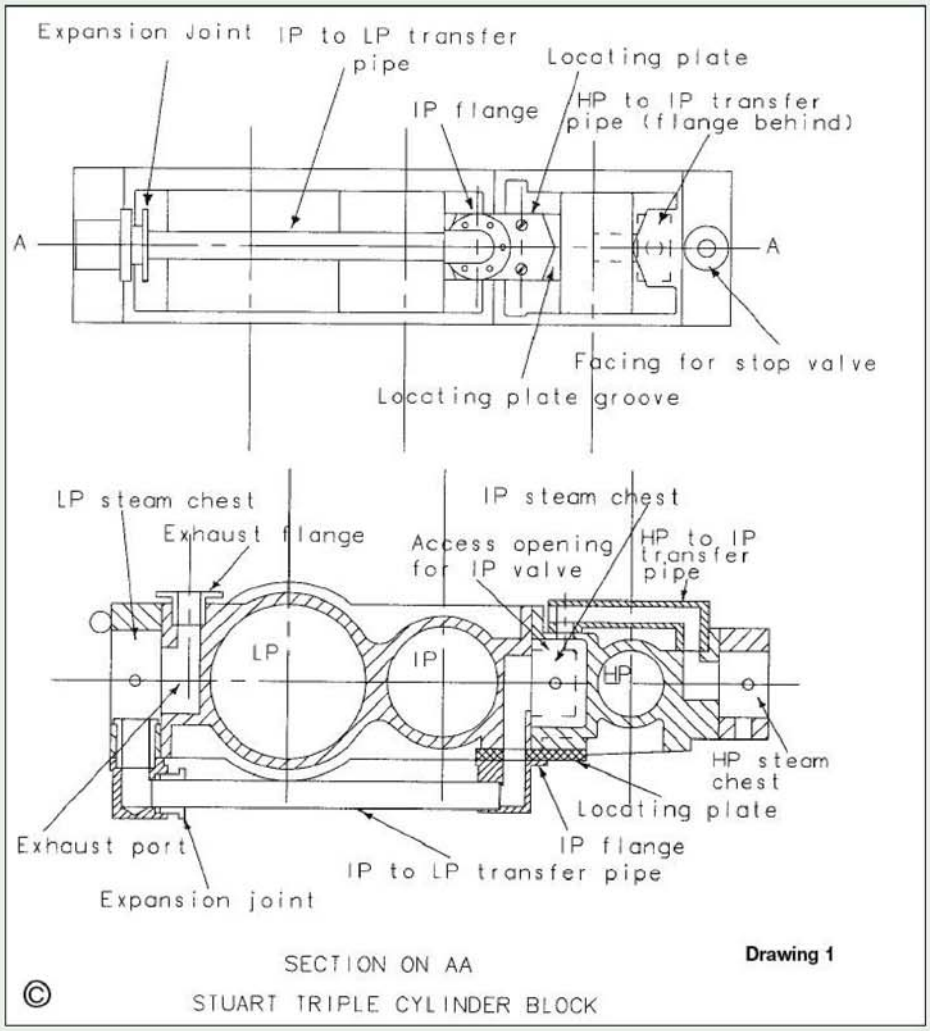

Drawing 1

high pressure cylinders, even for quite small engines. My engine only has the slide valve. I regret to say that this is not correct, but there is a valid reason for it being so. At least, I have increased the number of studs for the steam chest cover to deal with the higher steam pressure. My first model does have a high pressure piston valve - so there!

While large engines had external, well lagged pipes conveying steam between the cylinders, small ones often had these passages cast into the cylinder block. I have been able to simulate this arrangement for the high pressure and intermediate pressure cylinders and have kept the intermediate/low pressure pipe as close as possible to the block. **Drawing 1** makes this clear. In my opinion Stuart's arrangement is bad as these steam hot, unlagged pipes would be a serious danger to engine room personnel. Another bad feature of these pipes is the two-bolt oval flanges. These should round flanges with at least six bolts. Another bad feature of the design is the absence of any access to the intermediate pressure valve and steam chest. There should be a bolted cover giving access to the top of the chest so that the slide valve can be assembled, adjusted and examined. This cover is shown on one of my photos.

The cylinder drain cocks supplied by Stuart are too large and of the wrong type. Not only would they send a jet of scalding steam and water into the engine room but more than likely, into the face of the person using them. My smaller screw down ones direct the water and steam downwards. These cylinder drains should be led to the bilges but this is hardly possible in a working model in this scale, as the full size pipes would not be more than 1/2in. diameter.

Connecting rods with semi-circular fork ends were found to be a weak design with the advent of high-speed engines after the turn of the last century. The triangular design, as per my model, quickly superseded the semi-circular type as being much more rigid and strong. I think they look better, too. So often in engineering structures 'if it looks right it probably is right' There should always be a good radius where the body of the rod joins the foot, the holes for the bolts being cottered if necessary. The bottom end bolts should be fitted with lock nuts as should the eccentric strap bolts and the main bearing studs.

I have never liked those unrealistic 'blobs' on top of the steam chests as valve tail rod guides. These should be brass or gunmetal items screwed into the steam chest tops. Marine engines, in common with most steam engines of any size, had valve tail rod guides and, like the valve rod, should be fitted with glands as well. I have

Drawing 2

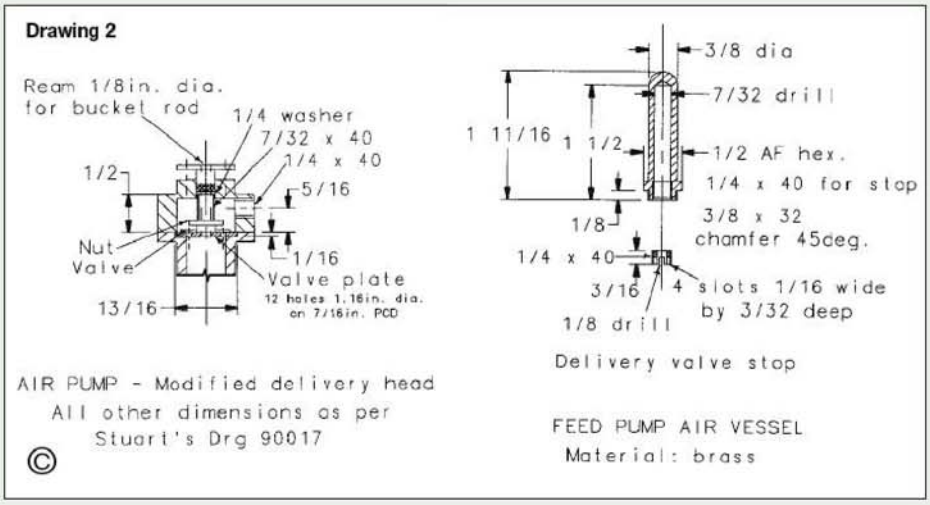

looked into the possibility of making these for the Triple but there is not room for them without shortening the eccentric rods; which would ruin the engine's appearance. But, if anyone has been able to work these in please let us lesser mortals see it. All marine engines, except very small ones, had double bar links. This I have also thought over for the Triple but in a 1in. to the foot scale small engine, the assembly of such links (and disassembly when required for valve adjustments, etc) has, so far, defeated me. Also some of the parts would be very delicate and unsuitable for a working model. The feed pump plunger has the same mean speed as the engine pistons, which would be some 400ft/min full size, a bit fast for a pump plunger and an air vessel in the pump delivery would be necessary. The photos do not show one on my engine but one has since been fitted over the delivery valve in place of the screwed cap. The air vessel is shown on **drawing 2**. The air pump follows Stuart's design except for a modification to improve its working shown on drawing 2. For a working condensing engine, a suction valve between the pump and condenser is desirable.

The low pressure crank has a large unsupported span between the main bearings and I have increased the shaft diameter by 1/16in. between the bearings to increase its stiffness as shown in **drawing 3**.

Lubrication for a small engine like this one would be by wick feeds from oil boxes fixed at lower cylinder level and piped to wipers contacting oil cups on the crossheads for the slides and gudgeon pins. Oil boxes on the connecting rods would feed the bottom ends via oil pipes secured to the rods. Oil boxes would also be used to lubricate the valve gear. The eccentric straps would have wick feed oil cups, as would the main bearing caps. At this scale, a functioning lubricating system as above is not possible without vastly over scale pipes and boxes but a non-functional one, using copper wire for the pipes is worthwhile for a non-working model.

For my model, I have arranged for oil fed to the top of the slide bars to also get to the gudgeon pins via drilled crossheads and then to the bottom ends via drilled connecting rods. Eccentric straps have chamfered oil holes and the main bearing caps have brass oil boxes. Cylinder lubrication would most likely be by a sight feed displacement lubricator. I use a displacement lubricator when steaming my models but, of course, it is very much over scale. With cast iron cylinders and piston rings, I find plenty of oil essential in order to avoid rusting.

Marine steam engines did not have flywheels, except in the case of small, single-cylinder launch engines. However, some means of turning the engine during maintenance and adjustments was required, and this is one purpose of the wheel on my model. Large engines had worm and worm wheel drives for this purpose, either hand ratchet operated or power driven. Incidentally, for running under steam, the triple will require additional flywheel effect; at least until the piston rings are well run-in.

All marine steam engines had condensers. Those with the usual cast iron framing had the condenser cast with the framing except for the larger engines where this could lead to manufacturing problems. In the case of the space frame engine, such as mine, the condenser has to be a separate unit. This one has not got one but my first engine has one together with the necessary air and circulating pumps

The photos show the grab or guard rails fitted to my engine. These were an essential requirement for the safety of engine room personnel, especially in small ships working in coastal waters with their 'short' seas.

The screw propeller has to have some means of transmitting its thrust to the ship's structure. This is the function of the thrust block, which is usually close to the engine and fixed to the engine bearers which, in turn, are secured to the ▶

Drawing 3

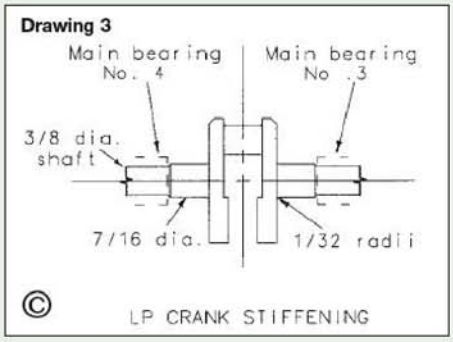

Full steam ahead! Propeller a blur, the engine is given a test run in the author's workshop.

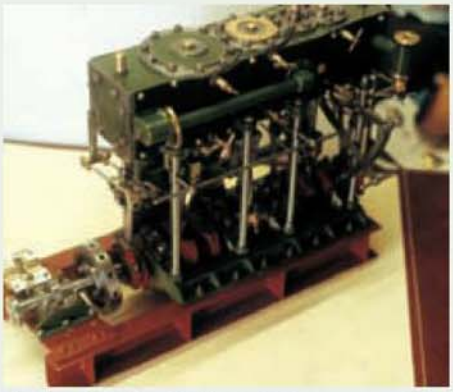

The top view showing the cylinder covers and the long, intermediate cylinder to low pressure cylinder steam transfer pipe.

ship's frames or floors over the whole length of the bearers. My model has a Mitchell type thrust bearing, invented by an Australian engineer of that name before World War One, and which made clever use of the hydrodynamic principles propounded by Beauchamp Tower in the 1880s. The Mitchell bearing rapidly replaced the old multi-collar horseshoe block after the war. Since my engine represents the 1920s 'state of the art', it has a Mitchell thrust bearing. One of the photos has the bearing cover removed to show the single thrust collar and the thrust shoes each side which carry the tilting thrust pads for ahead and astern running. Further details are shown on **drawing 4**.

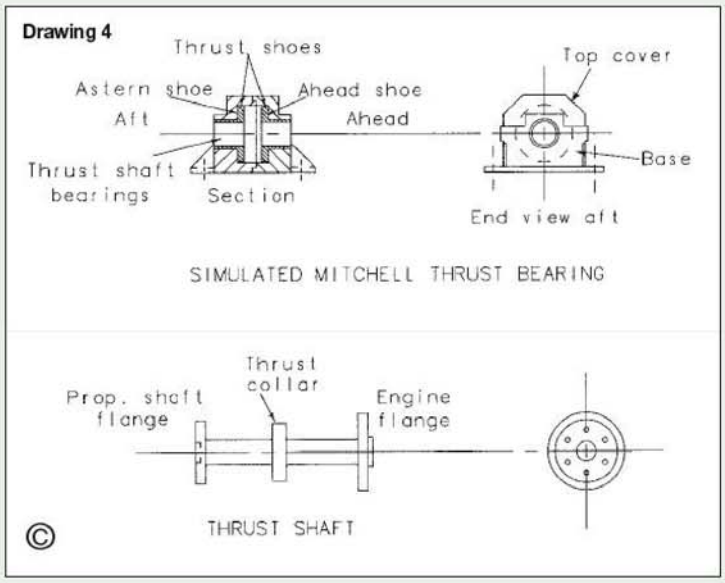

Referring to drawing 1 of the cylinder block. This shows a 'locating plate' covering the junction of the high pressure cylinder and the intermediate pressure and low pressure cylinders. This is a piece of 1/8in. thick steel 3/4in. long made a good tight fit in a 3/4in. wide groove machined in the two blocks after they have been faced and secured together with the four 4BA screws. The locating plate is fixed to the blocks with four 6BA countersunk screws and drilled for the intermediate pressure exhaust. Mine is also drilled for an intermediate pressure gauge connection. With this plate well fitted, the two blocks can now be machined as a complete unit ensuring accuracy in the lining up of the three bores and the various faces and drillings.

By removing the locating plate the two blocks can be separated and then reassembled, the plate re-fixed in position when the positional accuracy of the blocks will be restored.

A final word. Make sure that the cored steam ports in the cylinder castings are well cleared of any remaining foundry sand. Failure to do this will make rather a nasty mess of the cylinder bores and piston rings if you run the engine under steam.

I.C. ENGINE DESIGN

David Boote
brings us some further information on some unusual I.C. engine prototypes.

Readers may remember that in my series of articles that appeared in *Model Engineer* Vols. 186 and 187 (issues 4148, 4150, 4152 and 4154) the virtues of more unusual I.C. engine designs as projects for models were extolled. Reference was made, in some instances, to a shortage of information to allow this.

ROTOL

A group of sleeve valve engines made by a ROTOL team under the leadership of Douglas Pobjoy received specific mention. I used two sources of information, *Modern Petrol Engines* by Arthur Judge and *ROTOL – The History of an Airscrew Company* by Bruce Stait. Enquiries elsewhere did not add anything to these references. The company press release of 1943 described 1, 2 and 6 cylinder engines and I extended an invitation to readers to add more to this list if possible.

Well, the remarkable interests, background

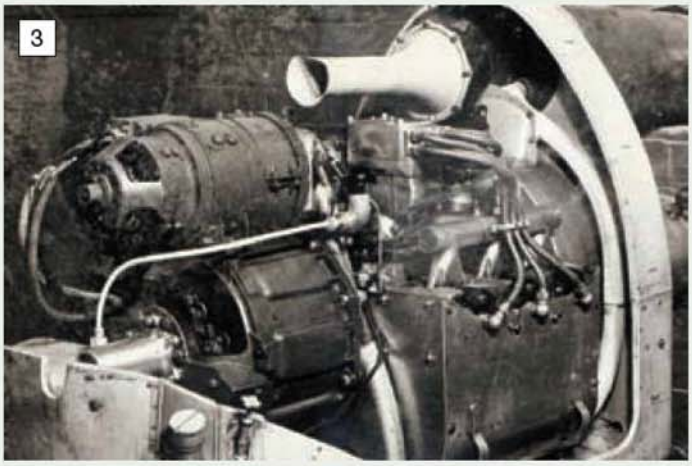

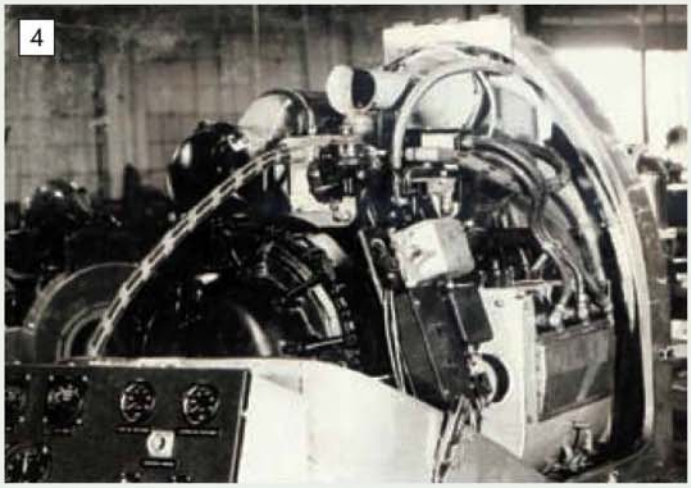

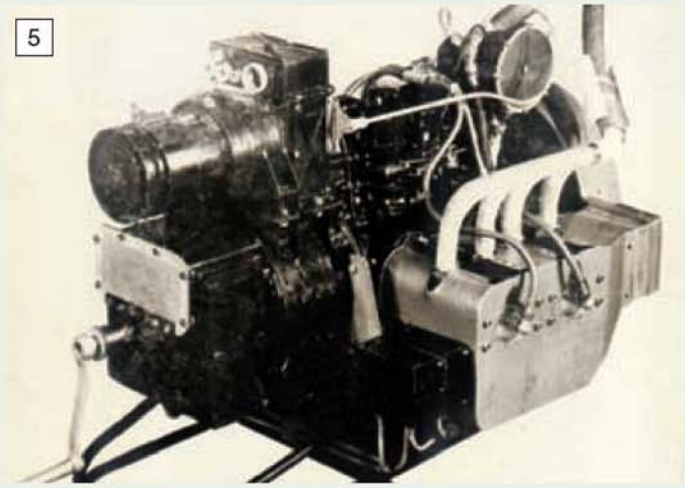

and knowledge of the *M.E.* readership has produced a reply. Mr. B. R. Hawker of Stroud has sent to the editor a set of ROTOL photographs dated 1944. These were given to him by an acquaintance carrying out a house clearance. The circumstances where the finder recognised that these might be of interest and gave them to a reader are indeed fortunate and my thanks to everyone concerned.

Photograph 1

This shows a view of an installation in the fuselage of an aircraft that could be for the supply of DC and AC auxiliary power. The fuselage is clearly using 'geodetic' construction as developed by Barnes Wallis and Vickers and the aircraft is most likely a Wellington. The ducting surrounding the engine makes any other deduction very error prone.

Photographs 2 and 3

These show views of 6-cylinder units taken in test cells. Clearly these installations are not identical.

Photograph 4

Again showing a 6-cylinder unit but with a different electrical end and an instrument panel added. The inner shrouding of the cylinders also shows differences though the outer covers seem to be alike and held on with toggle fasteners.

Photographs 5 and 6

These show engines of flat four configuration though nowhere in the references I found was a 4-cylinder engine mentioned. With this evidence, the total group must have included single, twin, four and six cylinders. Within such a group as this economics would strongly suggest some commonality of parts. *Modern Petrol Engines* gives the bore and stroke of the 6 cylinder unit as 3.375in. and 3in. respectively and a capacity of 161in.^{3} or 2.6 litres. Using these dimensions would give the 4 cylinder engine a capacity of 107in.^{3} or 1.7 litres. Compression ratio is given as 7.8 to 1, well within the fuel capabilities of the time but probably hard work on the starting handle.

Photographs 7, 8 and 9

Photograph 7 shows a twin cylinder unit and photograph 8 shows a similar unit connected to a Heenan and Froude dynamometer. Photograph 9 shows the twin engine in a test cell.

The twin unit looks attractive as a model minus of course the electrical end. More information would be of advantage and there may well be other readers, particularly in Gloucestershire, with hands on experience of this fascinating range of engines.

In the meantime ideas on how the twin might be approached as a model would be welcome. Perhaps very interesting correspondence could result and I am sure the editor would be favourably disposed to such an outcome.

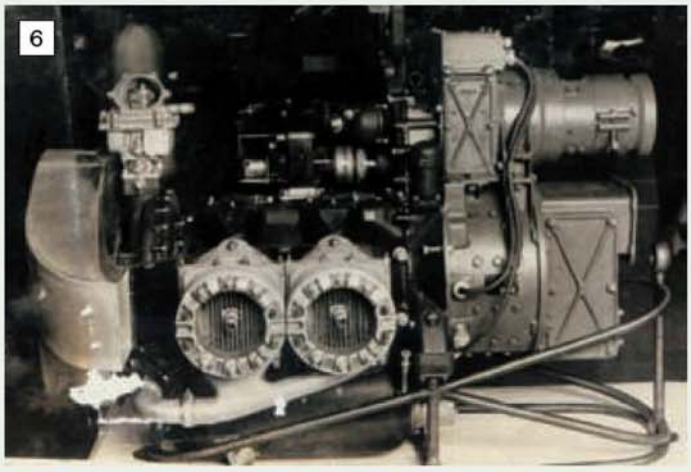

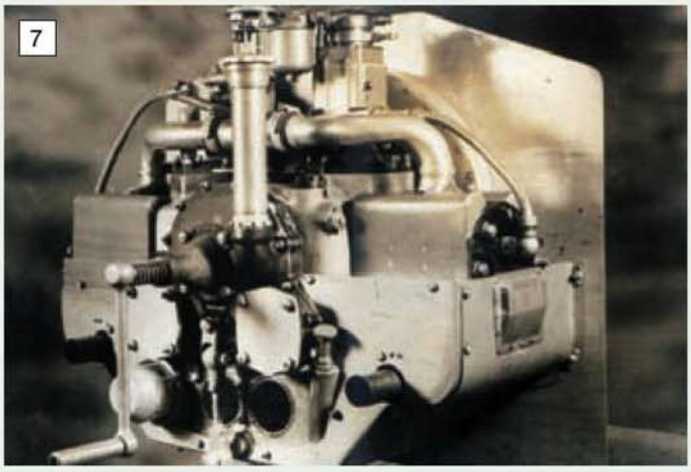

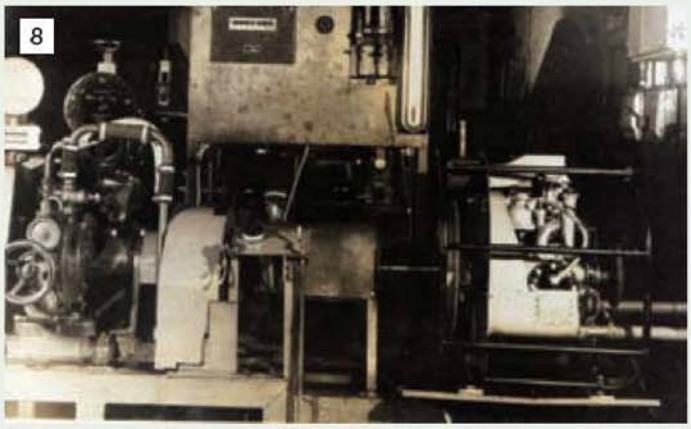

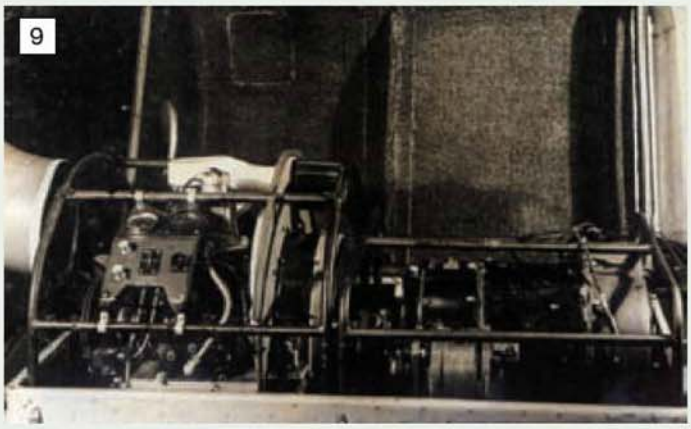

PETE'S PAGE

A FABRICATED LEVER BENCH PRESS

Peter Spenlove-Spenlove describes a rugged tool suitable for home construction.

Some views of the fabricated lever press. This was an apprentice's design and build exercise carried out under the supervision of the author. It was fabricated from stock materials and is therefore well adapted for construction by amateurs for use in there own workshops.

In the 1960s, when most engineering firms had apprentices, I always asked my apprentice to make (and design if needed) items which would be of practical use in his later life as he moved from one department to another within the works. This little lever press was such a job. It was made to press small bearings in parts during a research project. We had a mandrel press but this was coarse and insensitive in action. I drew up a simple design for a fabrication from stock steel and which guaranteed that the table was square to the ram. The apprentice's detail parts drawings were fine and soon all the parts were ready for welding, fitting, testing and painting. It was a fine tool and used a lot. When the works closed, the equipment was scrapped, including a new Myford. I salvaged our press as its maker had long since moved on. I lost all the various punches, collars and bending tooling accumulated over the years since we made the press. They were at the bottom of the scrap skip.

Construction

It is easy to make at home and the sizes can be altered to suit the materials available. Our materials were drawn from the toolroom off cuts store. The frame consists of two 3/8in. thick black mild steel plates, spaced by four 1 1/8in. long bright mild steel collars 1 1/4in. dia. with 3/8in. dia. bolts locking the assembly into a firm unit. The ram, guide and base table is a 'sub-assembly' which is welded to the frame, to assure squareness and alignment. The frame is bolted to the bench via a pair of 1 1/2 x 1 1/2 x 6in. long pieces of rolled steel angle which, in turn, are bolted to a pair of long stout steel bars or square section structural steel tubes. We used 2 x 1/2 x 18in. long bright mild steel. We fixed this assembly to the bench so that the press overhung the edge. This was to give plenty of room to use G-clamps (to hold tooling on the table).

The ram is 1in. dia. ground mild steel or silver steel. A slot or fork 1/2in. wide at the top accepts the 2 x 1/2in. section, 3ft. long Dural lever. A true, central 1/2in. dia. bored hole at the bottom can accept tooling. A 5/16in. BSF thumb screw stops tooling from falling out. The lever pivots in holes in the top of a pair of 1/4 x 1in. bright mild steel links. These links pivot via a 3/8in. bolt through holes in the top of the frame. To permit changes of stroke and force, extra holes were drilled. One connects the parts to suit the job.

The whole press can be made in a model engineers workshop, with the exception perhaps of flame cutting and electric arc welding the frames. The frame can be cut by chain drilling and/or band/hacksawing. We oxy-acetylene flame cut ours. After filing the blobs off, the pair was clamped together and electric arc tacked together. After marking out, all the holes were drilled through. The table seating edges and the ram guide seating faces were filed true, flat and at 90deg. accurately. The collars were turned 1 1/8in. long, the frames separated and the collars bolted in between. Next, the ram guide of 1 1/2 x 1 1/2in. bright mild steel was bored through for a good smooth slide fit for the ram. We used the 4-jaw chuck on our Myford 3 1/2in. lathe. The table of 6in. sq. x 1/2in. bright mild steel was drilled and reamed centrally 1/2in. diameter. The top face was filed and scraped until it was flat before drilling the 1/2in. dia. hole. A piece of ram steel was accurately bored and tapped 1/2in BSF and faced off square. This was opened up to 1/2in. dia. for 1/2 inch. The table was firmly screwed on to the tapped ram previously prepared. Some anti-seize compound (car D.I.Y. shop) was wiped inside the guide and on the ram. The ram was slid on. This assembly was offered up to the frame assembly. A snug fit was what we were looking for. The ram guide was tack welded using an arc welder, checking to see that the table had not shifted (welding distortion). After making minor corrections, the table was welded to both frames. We were then able to undo the bolt holding the table to the ram. We then used a piece of 1/2in. dia. bright mild steel round rod to test that it would slide through the table hole and freely into the 1/2in. hole in the ram. This checked that the ram and table were in line. Most 'press tools' have a top and bottom half. i.e. punch and die. If any distortion had occurred, the tacks could have been broken, filed off and re-done. A qualified welder will be experienced in knowing how to do this job. The first tack will cool and contract. This is how the parts can be pulled out of position. With careful clamping, the opposite tack will pull the error back to true. Our welder applied two tacks - one at opposite corners. The other corners were then tacked. He then checked that the table hole and ram were still in line, added more tacks and tested again. These tacks need to be strong enough in total to allow a full bead of weld to be applied to each joint - two for the table and two for the guide. There is no need for ultra strong heavy welding. In fact, a heavy bead on the guide could distort it enough to jam up the ram. That is why we used anti-seize paste. Our ram was 0.001in. under the hole size. After welding, it was a tap out fit i.e. the ram guide did distort. If you make a dummy ram out of bright drawn steel bar which is usually a few thousands of an inch under size, it will avoid the possibility of a seize up! This dummy ram will not be wasted. We made rams of various lengths to suit all sorts of jobs. The top tools or punches have 1/2in. dia. spigots, as do the bottom tools or dies. This assures axial alignment, but to ensure that the top tool does not rotate, we added a key way to our rams. It was milled 1/4in. wide and 5/32in. deep along the whole length of each ram. A milling machine is needed for this operation. It can be done by mounting the ram on the lathe cross-slide and using a slot drill in the mandrel collet, but care is needed in setting the job. It will need three or more bites to cover a 12in. long ram. The key is screwed into the guide at the front with a 2BA cap screw at the top and another at the bottom. The key (1/4 x 5/32in.) is the same length as the guide block. A 1/4in. BSW hole half way down accepts a thumb screw. It pushes the key a few thousands of an inch against the bottom of the key way to lock the ram

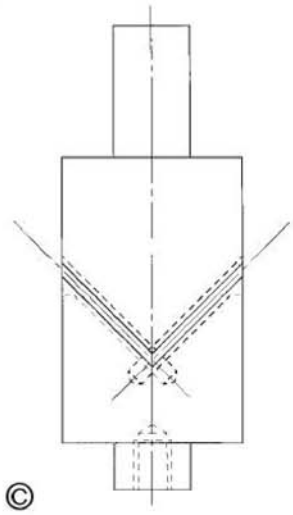

V-bending tool for rods.

1: Turn from square or round stock with the two spigots in line.
2: Mark out and drill (rod drill size) to meet on centreline.
3: Band saw both sides through holes to produce top and bottom die.
4: File a radius on tip of top die to suit the rod corner radius.
5: File radii on bottom tools sharp tips to avoid marking work. Use a round file of a size to suit the work.

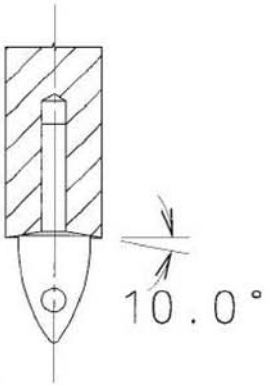

Punch for cutting washers.

1: Having used a simple punch and die to punch the washer bore holes in a sheet.
2: Use the above outer diameter punch to complete the washer. Fit a 'slip in' fit pilot to suit the bore. For interchangeability, make all punch's pilot holes and pilot shanks the same. Drill a cross hole in the pilot nose to aid removal. The pilots need not be hardened.
3: The silver steel punch is hardened. The outer undercut edge is to be very sharp.

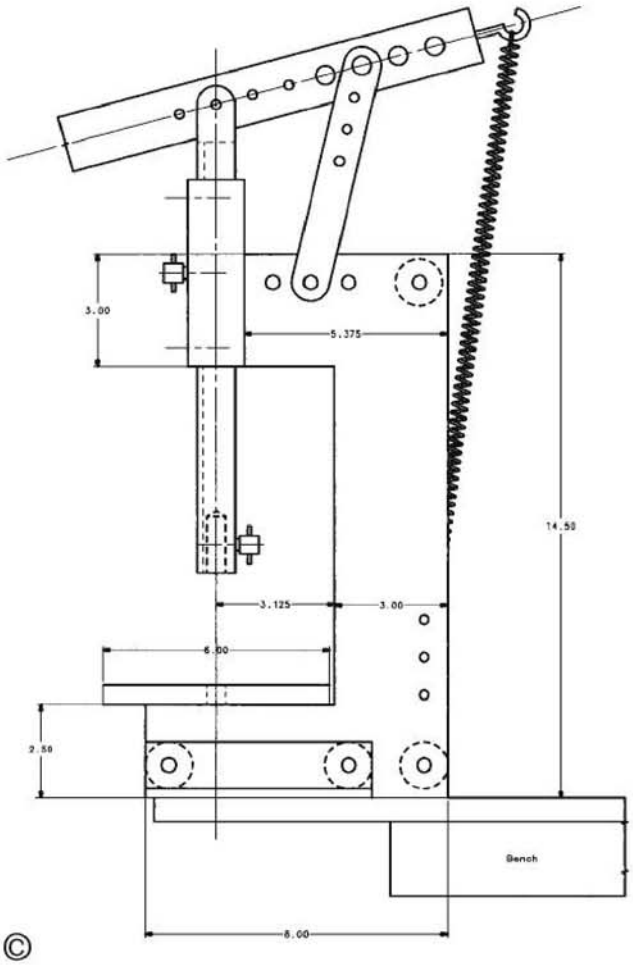

while inserting tooling, etc. The rear of the lever has a hook from which a long tension spring (or a weight) is used to keep the ram up until it is pulled down to perform a job. As various holes were provided to alter the stroke and force, it is convenient to be able to unhook the spring while threading the screws through the chosen holes. All pivots work on the plain shank of the Allen cap head screws. Wing nuts were used and any surplus thread length was cut off. Silver steel, threaded at each end can be used. The frame bolts were Allen cap head screws too, but home made studs plus two nuts will be just as good. As stated, the lever, with several 1/4in. dia. holes fits into the ram slot or fork. A 1/4in. dia. pivot here is fine, but the lever to links bolt is also 1/4in diameter. As the links are not close to the lever, the bolt will bend. So we drilled and reamed the lever 1/2in. dia. - again in several places. A 'tube' was turned from 1/2in. dia. silver steel. Its length reached across from one link to the other. A 1/4in. drilled hole through the centre allowed a long 1/4in. bolt (or Allen cap head screws and nut or silver steel stud and nuts) to work without bending the pivot bolt. We could have used a 1/2in. bolt, but none was available.

All sizes can be altered to suit available materials, size of press required and work to be done on it. Ours will not set solid rivets, but is ideal for setting semi-tubular rivets, pushing in bearings and bushes. It will V-bend mild steel thinner than 0.050in. thick in an 8in. long V-bending tool. This tool will also bend 16 s.w.g. commercial aluminium sheet. To apply greater force, make the lever of steel - say 2 x 1/2in. and use stouter links with bigger bolts, 1/2in. or more, going through the lever. No need to increase the 1/4in. high tensile bolt (Allen screw) through the ram/lever joint. You will have to hang on to the end of a very long lever to shear that pivot! By looking at the photograph which is made up of three views, the reader can gauge the sizes by considering that the square table is 6 x 6 x 1/2in. and that the ram is 1in. diameter. The total height is nearly 2ft. - bench to top of link pivots. The centre line of the ram is 3 1/8in. from the frame. This latter dimension should be increased to 4, or more, inches, as we found that some tooling could not be clamped down really firmly, due to restricted space for the G-clamps. Our press did the job for which it was designed - but, like all tools, it got used for other work.

The drawing shows the frame sizes with the position of the various parts and holes. The maximum thrust on the ram is the product of your weight hanging on the end of the lever multiplied by the mechanical advantage:
(Handle to ram pivot)/(Ram pivot to link pivot)

Readers who have access to angle iron can replace the 6in. long pieces with longer, say 12in. or 15in. pieces and delete the 2 x 1/2 in. bright mild steel base to bench pieces. We had no angle iron suitable. To make it easier to use G-clamps, it is suggested that the side flange of the angle on each side under the table is cut off. This will allow G-clamps to grip tooling which is near the centre of the table.

Tooling

Make sure the 1/2in. hole in the ram is parallel. If the top end is a bit tight, a tool could get stuck in. Simple punch tools can be made from 1/2in. dia. silver steel with a generous chamfer on the top end. Bigger tools will have a shorter 1/2in. dia. shank. The end face of the ram will exert the pressure as in an industrial set up. The first pair of useful tools to be made could be simple circular pads about 1 1/4in. dia. x 1/2in. thick with 1/2in. dia. spigots to locate in the table hole and ram. A single 2in. dia. pad was turned for the table. A collection of rings is useful when pushing bearings etc. out of a part. Old roller bearing rings are ideal. Tools in the table hole can be firmly fixed by tapping the spigot axially - say 1/4in. or 5/16in. BSF - and using an Allen screw and large washer inserted from below. This press will V-bend 1/4in. bright mild steel rod. To make the tools which are like a bending tool for flat material, but with semi-circular grooves to accept the rod size. To form the grooves without a miller, you drill (rod size) holes into the block of metal. The holes meet on the centre line. Then saw/file part of the block away to expose the grooves. File the 'point' of the male/top tool where the two grooves meet, to give a suitable rod bending radius. Fix a rod end stop to the table to do a mass production job. Light alloy will be okay for a short run and easy to machine, saw and file. For regular repeats, use mild steel which is deeply case hardened; or even through hardening steel.

The press will produce washers from soft thin aluminium and composition sheet. Punch the holes in the sheet material first. Then, punch the outer diameter with a punch and die set like the one in the drawing. This punch has a pilot to locate the hole already punched. Make the pilot bullet shaped. It will make the washer easier to pull off the punch. If the ram is a good sliding fit in the guide and the table hole is in line, there will be no need to devise any further guidance for the tools.

CLUB CHAT
With Malcolm Stride

UK News

Bristol SMEE report that a major milestone has been achieved with the completion of 'the wall' after some two and a half years work headed by John Winter and Ron James. The result has had many compliments from the public. The fence work on platform two has also been completed including a lift up barrier *"just knocked up from an old ally door frame"* by Tim Hims. The society are also in the process of replacing two points that have given trouble because of the sharp radius. One has been replaced by 'John Coleman Associates' with another being constructed. The two new ground level sidings are also nearing completion with buffer stops built from rail ready to be installed. These are to be screwed to concrete pads set in the ground to discourage vandals. The society also had a letter from local councillor Howard Roberts praising the railway and suggesting improvements and commenting that "*I became involved with the railway some three years ago and have been fighting for it ever since because it is the only fun thing for children and big boys and girls in Ashton Court Estate*". Other comments indicate that Councillor Roberts has a very positive attitude to the railway. Let's hope this attitude spreads to other councils who sometimes only seem to see obstacles. The club had a visit by the 'Brean Steamers' which is an informal group who used to attend the original Brean Sands events and now spend a week in September visiting tracks in the west country as a substitute.

A group of members of the **Colchester SMEE** recently attended a locomotive driving course on the **Bure Valley Railway**. All who attended had a very enjoyable day driving the railway's latest locomotive which has an outline based on a Leek and Manifold locomotive. The society also made visits to **North West Leicestershire SME** and **High Wycombe MEC** during last summer. During October the society had two very different winter talks, one by Modelworks International on their range of loco and other kits and one from Ron Howes from the Kew Bridge Museum. The 'Wednesday Wrinklies' have made good progress with making and fitting point motors which have covers painted *"a nice shade of green"* by David Cocks. The motors are now ready to be connected to the signalbox lever frame.

Crawley Model Engineers have carried out some maintenance to the site including repairing some girders which had rusted away under some trees. The repairs were made with some angle being welded in place and then the group "*cleared up and went back to the hut for a second cup of coffee*". The club Simplex has had its boiler test and been passed off after its major repair and was tested by several drivers who declared it *"fit for traffic"*. Because of a lack of speaker, the November meeting became a general chat session which went on until way past the usual chucking out time. The late running Sunday in November was preceded by the members having to wash off the contents of four large boxes of eggs which had been thrown around the steaming bays. Another example of the general mindlessness of today!

The **East Somerset SMEE** are smiling because they finally have a tenancy agreement with the Royal Bath & West Society and have been granted planning permission to build their miniature railway. A group of members formally took possession of the building on 20 November and "*then with great gusto, we set about the first day's business of renovation and preparing it for its new lease of life*". The plans include completely recovering the building with PVC finished steel cladding, new doorways and dividing the internal space into two with a mezzanine floor in one half above a meeting room and machine shop. I am sure all readers who have been following events in this column will congratulate all members on sticking with the project in spite of the setbacks along the way and will wish them all the best with the venture. They are aiming to carry their first paying passengers at the Bath & West show this year. The society are looking for new members, so if you want to get involved in building work, concrete mixing, track laying, painting or any of the other activities that model engineering encompasses these days contact Roger Davis, Chairman (01749-677195) or via e-mail at **rogerdavis@essmee.org.uk** or Patrick McCormack, Public Relations (01749-689037) or e-mail **info@essmee.org.uk**

The display of models by **Fylde SME** at the Lytham St. Annes garden railway exhibition was very successful with some "*three or four models on our stand which had not been seen before*". Colin Duerden had a display of stationary engines running on air to provide more interest.

The **Gas Turbine Builders Association** has made the following comment in its latest newsletter: "*the GTBA has become aware of the availability of ready built model turbines, kits and component parts, including turbine wheels, of Chinese origin and manufacture. It appears that these items are being offered at prices significantly lower than any other well known and trusted brand names, which will make them very tempting to many prospective model turbine owners. We have received a number of independent reports that strongly indicates that component quality may be questionable, in particular the turbine wheels are not certified and hub failure is a strong possibility. It would be unfortunate, to say the least, if the hard-won good safety record of our turbines were compromised by less scrupulous manufacturers and distributors. Appropriate specific recommendations are being considered by the GTBA committee but in the meantime members are advised to satisfy themselves of the quality and construction of any engine or turbine wheel before attempting to run it.*" There may be others running turbines (or interested in doing so) outside the auspices of the Association so I have included the Association's comments in full. The society report that the Bristol Show was very successful with lots of interest and a demonstration to a television unit resulting in Tim Coles GT3 locomotive appearing on the Friday evening programme. So many demonstration runs were carried out that Tim Coles reported "*by the Sunday afternoon we were literally running on fumes, as all the kero supply had been used up and all the batteries were depleted. We eventually had to give up after the 3pm run as we had nothing left to do another run with.*" The newsletter also carried a report about Martin Stouten's turbine powered tractor model, used for tractor pulling competitions on the continent (see **photo**).

Len Steel of the **Guildford MES** has completed the restoration of the club 5in. gauge workhorse engine *Taurus*. This locomotive is over 50 years-old and during the course of the refit it was discovered that the two cylinders were of different sizes requiring considerable remedial work. The driving wheels have had new steel tyres fitted after it was found that they were so worn that the wheels had two flanges. The November talk was by Tony Drake who is a volunteer with the Bluebell Railway in Sussex. One point that was made is that this line is unique in that all its 35 locomotives are coal fired steam locomotives.

Hull & District SMEE are having a video shown entitled 'Building a Duchess' by Ian Cornwall on 30 March followed by 'Silver-Soldering – a Black Art' by Keith Hale from CuP Alloys on 13 April.

Leyland SME have received planning permission from South Kibble Borough Council to extend their $7^1/4$in. gauge ground level track to a continuous run of 900 metres. This is described as "*a large project for us both in terms of funding and effort*". They expect to start digging sometime in the spring so we will report progress in due course. Society membership is reported as slightly on the increase with a few new faces during the year and no doubt they have been made welcome helping with the extensive work to prepare the ground level rolling stock in readiness for the anticipated forthcoming extra mileage. Sunday 7 August this year is the Scale Running Open Day (prototypes only theme) and all visitors are welcome. We have been advised that readers should check the club website at **www.leylandsme.co.uk** for the latest updates.

Mike O'Brien, the Editor of the *Roundhouse* from **Malden & District SME** reports a successful season for the society last year with the *"play trains days"* proving very popular. These are informal days when family and friends can come along and have fun. Jonathan Wright reports that the junior section have been very busy round the site on various tasks including digging footings for retaining walls, pressure washing the maintenance shed area and painting. I think it is a very good sign for this club that the juniors are so active with such things. The society website (**www.malden-dsme.co.uk**) has been extended by Mark Adlington and having checked it out it is very good with lots of information and photographs and includes a superb

site plan. The 'Hampton Court Junction' four aspect signals have been refurbished by John Mottram with new lenses and baffle plates to eliminate stray light.

The 'Professor of Engineering, University of Life's Experience' at **Melton Mowbray & District MES** has discovered that the photographs of the 'Bressingham Terrier' which he is modelling show no castellated nuts anywhere. Instead each stud has a short unthreaded end with a split pin through it to stop the nut falling off should it become loose. He wishes to know "*when castellated nuts were thought of and by whom?*". Answers on a postcard please...

The **Model Engineers Society (NI)** participated in the Cultra Museum's 'Model Railway Day' and had several visitors to their track site and ground level railway. The visitors included Bob Symes who also "*gave a light hearted speech*" at the event dinner. This club also has an excellent website at **www.mesni.co.uk**

Members of the **North London SME** were entertained by Alan Dobins with his slide presentation on London's Historic Railway Stations. Alan's slides were all taken from areas where the public has free access and as Roger Bell comments in his report "*Alan's slides stopped and looked for us so that we could enjoy the workmanship from our armchair*". The November meeting was a busy one with members tackling the London Underground Quiz (reproduced in this journal before Christmas) and also viewing several videos grouped under the heading 'Canadian Evening'.

Norwich & District SME are making good progress with the new multi-gauge track extension. The concrete base for the main track is complete leaving the steaming bays and turntable bases to be done. Peter Lewis has "*produced a fine piece of equipment for rail bending*" ready for the track manufacture and laying activities. Simon Wood has been elected to the post of President and has the distinction of having had his photograph in these pages (23 April 1959) aged eight months with a copy of the magazine in his arms and described as our youngest reader. This just shows the importance of encouraging aspiring model engineers at a very early age. Peter is Engineering Director at Lotus Cars, does this mean that the club locomotives will now be going much faster than in the past? I am sure all readers will join me in congratulating Peter on his progress from early reader to Club President.

Martin Stouten's gas turbine tractor.

The **North Norfolk MEC** is getting on with track changes and producing support material for the new Lottery funded track material. Secretary Gordon Ford reports that "*at present we seem beset with irritating small problems and delays to work, the genny runs out of fuel, the drill chuck key doesn't work well or the chainsaw works for an hour then gives up*". I suppose that is true in most clubs, it is certainly a familiar scene for me! The club is also producing a station canopy in M&GN style. The club hosts, the North Norfolk Railway are rebuilding Thursford Goods Shed and a new water tower, but the spoil for these projects had to go somewhere and has appeared outside the club works shed door. The spoil heap is about 5ft. higher than the hut and as long. The club members will be asked how best to incorporate it into the new track building programme!

Plymouth Miniature Steam report that they have achieved a membership of 100 during 2004 which they describe as "*a milestone in the life of the club*". The new members have already brought new locomotives to the track and we hope they continue to play an active part in club activities. Dave Everett has written an interesting piece on servicing the popular Albrecht keyless chucks and makes the point that they should not be oiled on re-assembly as they should be dry for correct operation. Hands up all those who, like me, give them a squirt of oil occasionally!

The '0' Gauge section at ▶

CLUB DIARY

A minimum of 6 weeks notice is required for diary entries. Clubs and Societies are asked to include a telephone number for the assistance of would-be visitors.

MARCH

4 **Aylesbury (Vale of) MES.** *Dr. Arthur Tarrant: The History of Trams.* Contact Andy Rapley: 01296-420750.
4 **Canvey R&MEC.** *Keith Catchpole: Humour on the Footplate.* Contact Brian Baker: 01702-512752.
4 **Ickenham DSME.** *John Shawe: Building Steam Locomotives 2.* Contact David Sexton: 01895-630125.
4 **Maidstone MES (UK).** *AGM.* Contact Martin Parham: 01622-630298.
4 **North London SME.** *On the Table: Work in Progress.* Contact David Harris: 01707-326518.
4 **Rochdale SMEE.** *Doug Hewson: Building a Standard 4 Tank Engine.* Contact Mike Foster: 01706-360849.
4 **Romford MEC.** *Competition Night.* Contact Colin Hunt: 01708-709302.
5 **SM&EE.** *Bob Alderman: Building a full size locomotive from scratch.* Contact David Boote: 01202-745862.
5 **York City & DSME.** *Paul Butler: Year in 75.* Contact Pat Martindale: 01262-676291.
6 **Frimley & Ascot LC.** *Public Running.* Contact Bob Dowman: 01252-835042.
6 **Kew Bridge Steam Museum.** *Kew Bridge Steam Museum celebrates 30th Anniversary.* Information: 020-8568-4757.
6 **Reading SME.** *Public Running.* Contact Brian Joslyn: 01491-873393.
6 **South Durham SME.** *Running Day.* Contact B. Owens: 01325-721503.
7 **Leicester SME.** *Norman Smedley: Sentinel Centenary.* Contact Raymond Wallis: 0116-285-8824.
7 **Peterborough SME.** *Bits & Pieces.* Contact Tony Meek: 01778-345142.
8 **Dockland & E. London MES.** *Hon Sec's Annual Prize Quiz..* Contact P. M. Jonas: 01708-228510.
8 **Northampton SME.** *Auction of Models, Materials & Tools.* Contact Pete Jarman: 01234-708501 (eve).
8 **Saffron Walden DSME.** *AGM.* Contact Jack Setterfield: 01843-596822.
9 **Birmingham SME.** *Non-Steam Models.* Contact John Walker: 01789-266065.
9 **Harrow & Wembley SME.** *Photo Competition.* Contact Dr. Roger Greenwood: 020-8427-2755.
9 **Norwich DSME.** *Don Unwin: Building Replica Timepieces.* Contact Paul Reed: 01603-462925.
9 **St. Albans DMES.** *D. Metcalf: Model Boat Kits & Centrifugal Castings.* Contact Roy Verden: 01923-220590.
10 **Cardiff MES.** *Bring & Buy.* Contact Trevor Jenkins: 029-2075-5568.
10 **Sutton MEC.** *Natter Night.* Contact Mike Dean: 0208-657-5401.
10 **Worthing DSME.** *Other Men's Hobbies.* Contact Bob Phillips: 01903-243018.
11 **Brighton & Hove SMLE.** *Bob Youldon: My Way of Boiler Making.* Contact Mick Funnell: 01323-892042.
11 **Colchester SMEE.** *Keith Catchpole: The Story of the Edison Cylinder Phonograph.* Contact L. G. Hammond: 01376-511686.
11 **Hereford SME.** *Richard Donovan: Australian Steam.* Contact Richard Donovan: 01432-760881.
11 **Ickenham DSME.** *Club & General Interest Night.* Contact David Sexton: 01895-630125.
11 **Kinver & West Midlands SME.** *Bits & Pieces.* Contact John Campbell: 01384-891244.
12 **Birmingham SME.** *Dinner Dance.* Contact John Walker: 01789-266065.
12 **Cardiff MES.** *Steam-Up and Family Day.* Contact Trevor Jenkins: 029-2075-5568.
12 **Erewash Valley MES.** *Annual Dinner.* Contact Jim Matthews: 01332-705259.
12 **Glasgow & S.W. Rly Ass'n.** *Max Fowler: 25 Years of Railway Photography.* Contact Bruce Steven: 0141-810-3871.
12/13 *The 2nd Model Engineering & Hobbies Exhibition* at Michael Herbert Hall, South Street, Wilton, Salisbury. 10am-5 pm. Contact Peter Parrish: 01980-610346.
13 **Bedford MES.** *Boiler Test Day.* Contact Ted Jolliffe: 01234-327791.
13 **Gas Turbine Builders' Ass'n.** *AGM.* Contact: Tom Wilkinson: 01508-570977.
13 **Hornsby ME.** *Running Day.* Contact Ted Gray: 9484-7583.
13 **Leeds SMEE.** *Running Day.* Contact Colin Abrey: 01132-649630.
13 **St. Albans DMES.** *Club Running.* Contact Roy Verden: 01923-220590.
13 **Sutton MEC.** *Track Day.* Contact Mike Dean: 0208-657-5401.
14 **Fareham & District SME.** *AGM.* Contact Trevor Fry: 01329-285779.
14 **Melton Mowbray DMES.** *AGM.* Contact Phil Tansley: 0116-2673646.
14 **Saffron Walden DSME.** *AGM.* Contact Jack Setterfield: 01843-596822.
15 **Chesterfield MES.** *AGM.* Contact Mike Rhodes: 01623-648676.
15 **Erewash Valley MES.** *Lead Mining in Derbyshire.* Contact Jim Matthews: 01332-705259.
15 **Romney Marsh MES.** *AGM.* Contact John Wimble: 01797-362295.
15 **West Wiltshire SME.** *Model Engineering – A sort of history.* Contact R. Nev. Boulton: 01380-828101.
16 **Birmingham SME.** *Gauge One Evening.* Contact John Walker: 01789-266065. ▶

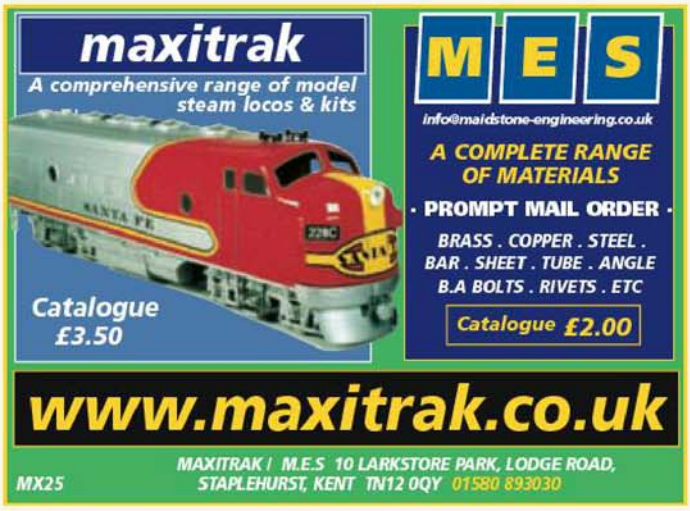

Reading SME are making good progress on the new layout with the station track ballasted and buildings and platform areas being constructed. The Chairman reports that at the Santa Specials, Santa arrived a little late and whilst waving to the children, overbalanced and fell off the train. Fortunately he was not hurt (except for a bruised ego) and the presents were distributed as usual. Bob Symes name has come up again as he featured in a video of the exhibition at the Reading hexagon in 1986 which he opened. The video was one of a number shown during the December video evening. The newsletter also reports that the popular Knowl Hill Steam rally will no longer take place due to increasing cost and the complexity of staging such an event. Member Alan Davidson writes that *"My researches have proved conclusively that the livery of a loco has a direct effect upon performance. An inescapable example lies with the LNER A4 class. Numerous performance tables sent to me by various correspondents prove conclusively that engines of this class in silver grey livery were consistently 10 minutes quicker to Grantham than the blue liveried examples! If further proof were required one need look no further than the ex-GWR 'King Class', certain of which were painted blue in the 1950's. The blue engines were substantially slower than the green examples and it has been claimed that this was due to the blue paint flaking off in large pieces during running, causing considerable turbulence thereby increasing the drag factor. However, I am not entirely convinced by this theory as it is patently clear that the gross weight of the loco was steadily reducing throughout the journey, thereby improving power to weight ratio!"* I leave readers to draw their own conclusions!

Richard Readyhaugh has notified us that **Rochdale SMEE** have a new Chairman, F. A. J. Collins and John Sibles has replaced Richard Guthrie as treasurer. We wish both well in their new posts.

In Memoriam

It is with the deepest regret that we record the passing of the following members of model engineering societies. The sympathy of staff at *Model Engineer* is extended to the family and friends they leave behind.

Martin Coles	*Norwich & District SME*
Gerry Francis	*North Norfolk MEC*
Ron Oxborrow	*Colchester SMEE*
Frank Wass	*North Norfolk MEC*

16 **Bournemouth DSME.** *David Boot & Ron Archibald: Building IC engines.* Contact Dave Fynn: 01202-474599.
16 **Guildford MES.** *Bits & Pieces.* Contact Dave Longhurst: 01428-605424.
16 **Hull DSME.** *AGM.* Contact Tony Finn: 01482-898434.
16 **Leeds SMEE.** *Meeting Night.* Contact Colin Abrey: 01132-649630.
16 **MELSA.** *Monthly Club Meeting.* Contact Graham Chadbone: 07-4121-4341.
17 **Cambridge MES.** *AGM.* Fulbrooke Road. Contact Rex Mountfield: 01284-386128.
17 **Cardiff MES.** *John Styles & Mike Jones: CNC Machining Pt. 1.* Contact Trevor Jenkins: 029-2075-5568.
17 **Leyland SME.** *Alan Crossfield: Painting the Prairie.* Contact Mark Entwistle: 01772-422411.
18 **Canvey R&MEC.** *Alan Bone: Railways I have visited.* Contact Brian Baker: 01702-512752.
18 **North London SME.** *David Mitchell: The Talyllyn Railway.* Contact David Harris: 01707-326518.
18 **Rochdale SMEE.** *Annual Models Competition.* Contact Mike Foster: 01706-360849.
18 **Romford MEC.** *Keith Catchpole: Longmoore Military Railway.* Contact Colin Hunt: 01708-709302.
18 **Romney Marsh MES.** *DVD Evening.* Contact John Wimble: 01797-362295.
19 **Bristol 2005 Model Trams & Buses** at Newman Hall, Grange Court Road, Westbury Road, Bristol. Contact Graham E. Warner: e-mail kidbux@lineone.net
19 **Chesterfield MES.** *Public Running Day.* Contact Mike Rhodes: 01623-648676.
19 **SM&EE.** *Rummage Sale.* Contact David Boote: 01202-745862.
19 **York City & DSME.** *Members' Talks.* Contact Pat Martindale: 01262-676291.
20 **Bedford MES.** *Boiler Test Day.* Contact Ted Jolliffe: 01234-327791.
20 **Bristol SMEE.** *Boiler Testing Day.* Contact Trevor Chambers: 0145-441-5085.
20 **Frimley & Ascot LC.** *Club Running.* Contact Bob Dowman: 01252-835042.
20 **Model Steam Road Vehicle Soc.** *Boiler Testing Day.* Contact Geoff Miles: 01869-247602.
20 **Northampton SME.** *Boiler Testing Day.* Contact Pete Jarman: 01234-708501 (eve).
20 **Portsmouth MES.** *Bugs out Run.* Contact John Warren: 023-9259-5354.
21 **Leicester SME.** *AGM.* Contact Raymond Wallis: 0116-285-8824.
21 **Model Steam Road Vehicle Soc.** *Grand Auction.* Contact Geoff Miles: 01869-247602.
21 **Peterborough SME.** *Mike Wickham: Woodturning.* Contact Tony Meek: 01778-345142.
23 **Birmingham SME.** *AGM.* Contact John Walker: 01789-266065.
23 **Guildford MES.** *AGM.* Contact Dave Longhurst: 01428-605424.
23 **Harrow & Wembley SME.** *Mark Hamlin: Hovercraft.* Contact Dr. Roger Greenwood: 020-8427-2755.
24 **Cardiff MES.** *John Styles & Mike Jones: CNC Machining Pt. 2.* Contact Trevor Jenkins: 029-2075-5568.
24 **Sutton MEC.** *Models Old & New.* Contact Mike Dean: 0208-657-5401.
24 **Worthing DSME.** *Bits & Pieces.* Contact Bob Phillips: 01903-243018.
25-28 **British Columbia SME.** *Easter Meet.* Contact Sean Laurence: (604) 931-1547.
25-27 **Furness MRC.** *FMRC Easter Exhibition.* Contact Bob Watson: 01229-831937 or Bob Reeves: 01229-838088.
25-28 **Leighton Buzzard NG Rly.** *Easter Fun.* Enquiries: 01525-373888.
26 **Brighton & Hove SMLE.** *First Trackday of The season.* Contact Mick Funnell: 01323-892042.
26/27 **Guildford MES.** *Maintenance Weekend.* Contact Dave Longhurst: 01428-605424.
26 **Hornsby ME.** *Family Day & Boiler Inspection.* Contact Ted Gray: 9484-7583.
26 **Stockholes Farm MR.** *AGM and Wakey, Wakey Day.* Contact Ivan Smith: 01427-872723.
27 **Amnerfield Miniature Railway.** *Public Running.* Contact David Jerome: 0118-9700274.
27/28 **Bedford MES.** *Easter Bank Holiday Running.* Contact Ted Jolliffe: 01234-327791.
27 **Canvey R&MEC.** *Operating Refreshers from 11am.* Contact Brian Baker: 01702-512752.
27/28 **Cardiff MES.** *Open Days.* Contact Trevor Jenkins: 029-2075-5568.
27 **Birmingham SME.** *Easter Locomotive Parade.* Contact John Walker: 01789-266065.
27/28 **Bristol SMEE.** *Public Running.* Contact Trevor Chambers: 0145-441-5085.
27/28 **Elmdon MES.** *Easter Eggstravaganza.* Contact Chris Giles: 0121-458-1291.
27 **Harlington LS.** *Public Running.* Contact Peter Tarrant: 01895-851168.
27 **Leyland SME.** *Boiler Testing Day.* Contact Mark Entwistle: 01772-422411.
27 **Maidstone MES (UK).** *First Public Running Day.* Contact Martin Parham: 01622-630298.
27/28 **Oxford (City of) SME.** *Running.* Contact Chris Kelland: 01235-770836.
27 **Peterborough SME.** *Start of Running Season.* Contact Tony Meek: 01778-345142.
27 **Portsmouth MES.** *Start of Running Season.* Contact John Warren: 023-9259-5354.
27 **Reading SME.** *Public Running.* Contact Brian Joslyn: 01491-873393.
27 **Romney Marsh MES.** *Easter Track Evening.* Contact John Wimble: 01797-362295.
27 **York City & DSME.** *Running Day.* Contact Pat Martindale: 01262-676291.
28 **Brighton & Hove SMLE.** *Trackday.* Contact Mick Funnell: 01323-892042.
28 **Canterbury DMES (UK).** *AGM.* Contact Granville Askham: 01227-463295.
28 **Frimley & Ascot LC.** *Bank Holiday Run Easter.* Contact Bob Dowman: 01252-835042.
28 **Hornsby ME.** *Meeting.* Contact Ted Gray: 9484-7583.
28 **Northampton SME.** *Easter Running Day.* Contact Pete Jarman: 01234-708501 (eve).
28 **Saffron Walden DSME.** *Running Day with Barbecue (public running after 2pm).* Contact Jack Setterfield: 01843-596822.
28 **Stockholes Farm MR.** *Easter Monday Open Day.* Contact Ivan Smith: 01427-872723.
28 **Taunton ME.** *Public Running.* Contact Don Martin: 01460-63162.

beginners start here...

WHAT BETTER WAY TO FOLLOW ON FROM A FOUNDATION COURSE THAN BUILDING A SIMPLE STEAM ENGINE? BUY *MODEL ENGINEERING A FOUNDATION COURSE* AND PAY FOR *BUILDING SIMPLE MODEL STEAM ENGINES* AND WE'LL GIVE YOU VOLUME 2 FOR FREE

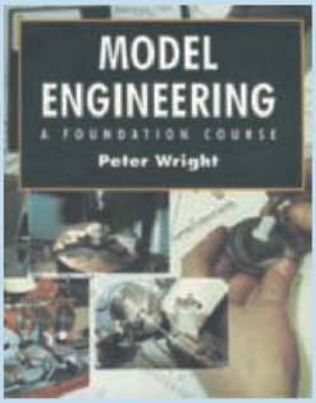

Model Engineering - A Foundation Course

Peter Wright

A new book by an experienced model engineer covering all the basic techniques: understanding engineering drawings, buying materials, marking out, sawing, filing, bending and forming metals. Includes a review of engineering, materials, the making of cutting tools in the home workshop and much more. A must for those practical people who have little experience of working in metal.

1997 1-85486-152-2 236 x 189mm

416 pages Illustrated paperback £16.95

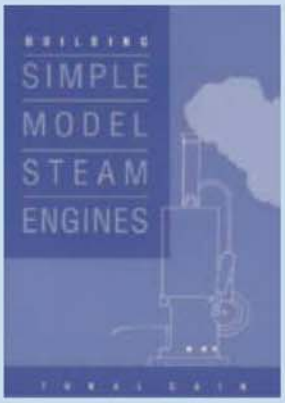

Building Simple Model Steam Engines

Tubal Cain

The sheer simplicity of miniature oscillating steam engines has an enduring fascination for all marine and model engineers. This book shows how to build four model steam engines and features designs and plans that even a beginner will be able to follow.

1993 1-85486-104-2 210x148mm

112 pages Illustrated paperback £5.50

Building Simple Model Steam Engines II

Tubal Cain

Since the publication of the first book dealing with these fascinating little engines, the author has designed and built several more ranging from a delightful little turbine to a larger engine in the style of the magnificent 'Steam Engines of the Highest Class' offered by toymakers before WW1. Fully detailed methods of construction with the beginner in mind.

1997 1-85486-147-6 210x148mm

112 pages Illustrated paperback £5.95

Please add £1 p&p for single book orders and 50p for each additional book ordered

---

Send payment with your name, address and telephone number to:
Customer Services, HIGHBURY LEISURE Publishing Limited, Berwick House, 8-10 Knoll Rise, Orpington, Kent BR6 0PS.
Cheques made payable to Nexus Media Limited.

Telephone Customer Services on 01689 886660/886661.
Don't forget Valid From, Expiry Date and Issue Number details if you're paying by credit card.

MODEL ENGINEER

CLASSIFIED
Advertisements

Send to Model Engineer Classified Department, Highbury Leisure, 3rd Floor Berwick House, 8-10 Knoll Rise, Orpington, Kent BR6 0EL.
Fax: (01689) 886666, Email: trobertson@highburyleisure.co.uk
All advertisements will be inserted in the first available issue. There are no reimbursements for cancellations. All advertisements must be pre-paid.
The Business Advertisements (Disclosure) Order 1977 – Requires all advertisements by people who sell goods in the course of business to make that fact clear. Consequently all trade ads in *Model Engineer* carry this 'T' symbol

MODELS AND MATERIALS

EVENSON ENGINEERING

Quality Machines and Tooling

Machine Sales

YET MORE EX-UNIVERSITY MACHINARY (HARDLY USED) SOME AS NEW!!!

2 off Boxford 1130 Lathes $5^1/_2$" x 30" D.I.3 with coolant, light, Q.C.T. with G/Box and EMCO milling head. Fully tooled, imaculate condition. £2950
2 off Boxford 1130 Lathes $5^1/_2$" x 30" G/Box. Fully tooled. As above but no milling head. £2275
Viceroy Sarp Edge Grinder for plane blades & chisels etc. As new. £275
Viceroy AEW vertical mill 30 int Swivel vert head 34" x 8" Table with phase inverter & collet chuck. Like new. £1850
Bridgeport mill 42" x 9" Table power feed. D.R.O. Bolt head 1986. ....£2850
Colchester Bantam 800 lathe with tooling D.13 mount excellent condition. £1450
Colchester Student R/H 6"x24" with tooling QCT coolant.
Meddings Bench Drill 3 Phase £150
Harrison L5A Lathe G/Box and Tooling £1,200
Versatool Tool Cabinet £150
Bridgeport Scotting Head £700
Arbor Prossess 20FF ....£100 each
Thompson Matrix Slips Imperial £100
Close Pole Magnetic Bases ....POA
Colchester Triumph R/H Taper Turning Attachment £400
3 point steady for Dean Smith and Grace lathe. £200
New 8" 4 jaw for Harrison L5 3/4" bore lathe Pratt Burnard. £125

NEW IN STOCK

Boaring & facing head Whalupta 2mt ex-condition boxed but some tooling missing. £295
Hoffman 8" dividing table. £350
Hoffman 6" rotary table. £300
Ketona 3ft folder £300
Harrison 140 lathe. Tooling & full g/box. £1300
Harrison 140 lathe. Tooling & ABC G/Box. £1000
Myford Minicop copy turning lathe on cabinet....P.O.A.
Startright Terrier 6" Hacksaw (as new) £750
Wadkin Universal Cutter Grinder Type N.H. with lots of tooling £1,500
Harrison L5 Lathe Gap Bed with Tooling £800
F J Edward 4MT Pillar Drill Large machine with P.D.F. £400
2 x Viceroy Sharp Edge Grinders 1 as new....£250
Beaver Mill in outstanding condition 30 int Table £2200
Edwards 4 foot x 1.5mm Pneumatic Guilotine. £600
3 x Harrison L5 lathes tooled ....£700 each
Grimston drill floor stand with tapping plus x-y compound table. ....£850.
Harrison 140 gap bed lathe gear box. Excellent condition. £1,500
Engraving machine excellent condition. £200
Colchester chipmaster single phase 6"x20". £500
Colchester master straight bed lathe with clutch. Has electrical fault. £600

MISCELLANEOUS

Abwood vert-spindle surface grinder 18"x6" mag chuck, hand operated, little used Bridgeport 90° Head £225
Leytool slotting machine, 3" stroke, small footprint, swivel head, rebuilt & painted £1175
LBridgeport milling head, 2 speed motor R8 power quill (fits most mills, le Adcock & Shipley 1ES)....£850
Eclipse magnetic chuck 19" x 12" £300
Colchester Chipmaster lathe (breaking) £350
Collet chucks, box blocks, vices, angle plates, surface plates etc ....Please phone
Student 18" Faceplate £95
Hort Pedestal Sander 15 Disc Ex Uni £350

WE ALSO PURCHASE QUALITY MACHINES & TOOLING • DELIVERY SERVICE AVAILABLE
PLEASE TELEPHONE BEFORE TRAVELLING – WEEKEND & EVENING VIEWING AND DELIVERY SERVICE

More machines always in stock.
Tel: 01274 402208 & 780040 Mobile 07050 272169
4 Duchy Crescent, Bradford, BD9 5NJ

THINKING OF SELLING YOUR LATHE, MILL OR COMPLETE WORKSHOP

and want it handled in a quick, professional no fuss manner? Contact David Anchell, Quillstar (UK) Ltd (Nottingham).

Tel 0115 9255944 Fax 0115 9430858

TRUE PHASE CONVERTERS

ESTABLISHED FOR 60 YEARS

- RUN THREE PHASE MACHINES FROM A SINGLE PHASE SUPPLY
- REVOLUTIONARY DESIGN
- OUT PERFORMS OTHER CONVERTORS
- MONEY BACK GUARANTEE

DANEBURY ELECTRIC LTD
Phone, Fax or Email for Colour Brochure
email: truephasesales@daneburyelectric.co.uk
Web: www.daneburyelectric.co.uk
Tel: 01202 524888 or Fax: 01202 530940

Myford www.usedmyford.com

have a good selection of
REFURBISHED LATHES & MILLERS
all with a year's guarantee

MASSIVE SAVINGS ON NEW - SAME TOP QUALITY

0115 925 4222
email: sales@usedmyford.com
or call in:
Wilmot Lane, Chilwell Road, Beeston
Nottingham NG9 1ER

MODEL MAKING METALS

1/32in. to 12in. dia. bright steel,stainless steel, bronze, spring steel, brass, aluminium, silver steel, steel tubes, bolts, nuts & screws, tap dies + drills, white metal casting alloys. Fine materials, chain, plastic, Lathe milling machines and equipment, new and secondhand.

Mail order nationwide and worldwide callers Mon.-Fri. 9-5pm.
Access/Visa welcome

Send now for a free catalogue or phone:
Milton Keynes Metals, Dept. ME,
Ridge Hill Farm, Little Horwood Road, Nash, Milton Keynes, MK17 0EH Tel: (01296) 713631 Fax: (01296) 0713032
Web: mkmetals.sageweb.co.uk Email: sales@mkmetals.co.uk

Seen My CAT!
Now on-line
Models, Machinery, Misc.
www.theengineersemporium.co.uk

Patents - Trade Marks - Designs
Protect your creative ideas
Kings® registered patent and trade mark agents established 1886 - information and fees on request.
73 Farrington Road, London, EC1M 3JQ.
Tel 020 7404 7788 - Fax 020 7831 0926
www.kingspatent.co.uk

PENNYFARTHING TOOLS Ltd. The Specialist Tool shop

Quality Secondhand
Machine Tools
at Sensible Prices
We purchase complete Workshops, Machines, Models and Hand Tools.
Agreed settlement on inspection - Distance no object

Tel: Salisbury 01722 410090
Web Site: www.pennyfarthingtools.co.uk

ATTENTION MODEL MAKERS

A wide selection of used workshop machinery Boxford, Viceroy, Colchester & Harrison Mills, drills and wood lathes.
BBC MACHINE TOOLS LTD
Carluke, Strathclyde, Scotland.
Tel: 01555 751121
Fax: 01555 751682

SOCKET SCREWS

Cap. Csk. Button. Set (Grub). Shoulder
METRIC. BA. BSF. BSW. UNF. UNC
Hexagonal & Slotted Screws Nuts & Washers.
Dowel & Spring Pins. Dormer HSS Taps & Drills. Draper Tools.
NO MINIMUM ORDER **PROMPT SERVICE**
Send 4 x 1st class stamps for our latest catalogue
Special offer ***** **Workshop Discount Pack** *****
30 different packets of socket, hex. and slotted screws
Pack 1. BA 8BA to 2BA.
Pack 2. Metric M2 to M6.
Catalogue value of pack is over £35.00
Either pack on offer to you
for only £24.95 + £2.95 p/p
Send for this offer and benefit from a very useful stock of screws in your workshop.
You will not be disappointed. Refund guaranteed.
Emkay Screw Supplies (ME)
74 Pepys Way Strood Rochester Kent ME2 3LL
Email: emkaysupplies@onetel.net
Tel: 01634 717256 www.emkaysupplies.co.uk *Mail Order Only*

PLEASE MENTION MODEL ENGINEER WHEN CALLING

WANTED

Complete Workshops Purchased or Single Machines & Models, Clock making Equipment & Other Engineering Equipment. Prompt Attention, Instant Decision, Immediate Payment and Removal. For a professional service from a company with over 17 years experience in the model engineering field call:

G and M Tools,
The Mill, Mill Lane, Ashington, West Sussex. RH20 3BX
Tel: 01903 892510 or
e-mail enquiries@gandmtools.co.uk

FANTASTIC DEALS ON CLARKE METAL LATHES

ChronoS
Engineering Supplies

Visit our new 6500 sq ft premises in Dunstable

Order securely on-line www.chronos.ltd.uk

CL500M WITH
LIVE CENTRE
DRILL CHUCK + 3 JAW CHUCK
SET OF 6 TOOLS
FLYCUTTER DEAD CENTRES
SCREWCUTTING COMPOUND
SLIDE 4 WAY TOOLPOST
MACHINE VICE
INC. CARRIAGE UK MAINLAND £789

CL300M - £360 OR LATHE PLUS 2MT LIVE CENTRE
3MT DEAD CENTRE
SET OF 6 TOOLS
DRILL CHUCK
4 JAW CHUCK
£415!!

PRICES INC. VAT AND CARRIAGE (UK MAINLAND)

WE NOW STOCK A HUGE RANGE OF CLARKE MACHINERY

TEL: 01582 471900 FOR YOU FREE 125 PAGE CATALOGUE

UNIT 14, DUKEMINSTER TRADING ESTATE, CHURCH STREET, DUNSTABLE, BEDS LU5 4HU
TEL (01582) 471900 FAX (01582) 471920 WWW.CHRONOS.LTD.UK EMAIL SALES@CHRONOS.LTD.UK

PRECISION TRANSFERS

Waterslide Railway Transfers

For full catalogue send a stamped, self addressed envelope, plus 2 first class stamps to cover costs to:-
The Precision Transfers Company
P.O.Box 876, Cheltenham, Glos. GL52 3WF
E-mail: sales@precisiontransfers.co.uk

Ortec

Ortec are manufacturers of low cost, high quality, precision digital readout - DRO for machine tools such as milling machines for the hobbyist and model engineering user. We offer a complete range of readouts from 1 to 3 axis in a variety of encoder lengths.

Phone +44 (0)1481-235708
www.ortec.freeserve.co.uk

(24 hr update) **www.tradesalesdirect.co.uk** **(Trade Prices)**

Don't wait for the next issue! Check out the Internet Web Site above. It contains a stocklist of used lathes, millers, grinders, drills, saws, miscellaneous machinery, accessories, items of interest, etc. A stocklist is also available 'FREE' by post.
Contact: David Anchell, Quillstar Ltd, Lower Regent Street, Beeston, Notts. NG9 2DJ
Tel 0115 9255944 Fax. 0115 9430858 or you can send an e-mail to: **david@tradesalesdirect.co.uk.**
WORLDWIDE SHIPPING. TRADE SALES DIRECT IS A SUBSIDIARY OF QUILLSTAR LTD.

THE TOOL BOX

For the best in used hand & light machine tools for *all* crafts
We also purchase good equipment and sell related books, as well as providing a world-wide back-issue service for *Model Engineer* and *Engineering In Miniature*. We don't publish lists, but if there's something you need, get in touch.

Open Monday – Saturday throughout the year
Colyton, East Devon EX24 6LU Tel/Fax: 01297 552868
e-mail: info@thetoolbox.org.uk **www.thetoolbox.org.uk**

For Precision Engineering, Model Engineering, Instrument Making, Prototype Development, Industrial Models etc. Please Call Ray on :- 01603 488107. Est. 1983

TO ADVERTISE CALL 01689 886650

For Sale:

Myford Super 7 on Stand & Tray - previously works refurbished. £400 o.n.o.

Axminster vertical mill/drill on cabinet stand - 25mm capacity M3 vari-speed 100-2150 rpm. As new. £400 o.n.o.

Axminster sheet metal 305mm shear-press-roll unused (new). £75 o.n.o.

Baty dial gauges 0005, unused. £10 each o.n.o.

Contact:
Ken 0115 9263703 (Notts)

R.A. ATKINS

Myford ML10 Lathes. Choice:	£450
Lorch LLV Collet Lathe	£425
Pultra 1770 Lathes Mardrive Cabinets	£750
Myford Super 7 Lathes. Choice:	From £800
Myford Super 7B Lathes. PXF:	From £2250
Viceroy 250 Centre Lathe. As new. Tooled:	£1150
Fobco Start 1/2" bench Drill	£225
progress No. 1 1/2" Pillar Drills choice	£150
Alexander Pantograph Engraver Much type	£295
Startrite 301 Bandsaw unused	£450
Senior E type Milling Machine	£1300
Myford VM-C Vertical Mill	£925
Myford Dividing Head with 2 plates	£325
Myford Coolant complete unused	£225

100s of TOOLS and MODEL ENGINEERING EQUIPMENT.
We constantly need to buy workshops.
Prompt inspection & settlement.

HUNTS HILL HOUSE, HUNTS HILL, NORMANDY, GUILDFORD, SURREY GU3 2AH
Tel: (01483) 811146 Fax: (01483) 811104

LYNX MODEL WORKS LTD.
Dovecote House, Maltby le Marsh, Alford, Lincs LN13 0JP
Tel: 01507-451565 Mobile: 07899-806689
Website: www.lynxmodelworks.co.uk
Email: info@lynxmodelworks.co.uk

WORKING SCALE MODELS AND SPECIALIST SERVICES

For everything including specialist parts manufacture to assist you, to the completion of your current project. Commissions undertaken for the complete build, repair and renovation of working Steam Locomotives from gauge 0 to 10 ¼", Traction Engines to 6" Scale, Stationary Steam Plants and Engines

Machinery, Tools and Steam Engines always for Sale and Wanted to Buy.

Lynx Model Paints - a range of matched colour synthetic enamel paints in 250-ml tins and sundries. We also carry out a full painting and lining service for that professional finish to your model.

Fully Certificated and EC Compliant Copper Boilers made with some ex-stock.

Agents for Stuart Models – we also build the ones that Stuart don't !

Visit our Website (www.lynxmodelworks.co.uk) or contact us today with your requirements for a no-obligation quote or discussion.

Quality & Service at the Right Price

ALL MAJOR CREDIT AND DEBIT CARDS NOW ACCEPTED

Call John Clarke on 01507-451565

Dreweatt Neate

AUCTIONEERS AND VALUERS ESTABLISHED 1759

Formerly Honiton Galleries
ENTRIES INVITED - SPRING AUCTION
THURSDAY 28TH APRIL 2005 AT 10.30A.M.

400 LOTS OF LIVE STEAM MODELS, STATIONARY ENGINES, LOCOMOTIVES, TRACTION ENGINES, WORKSHOP LATHES & EQUIPMENT, RAILWAYANA, CLOCKS AND CONTENTS OF CLOCK MAKERS WORKSHOP, PART BUILT MODELS, BOATS and TOYS.

SEE US AT THE TAUNTON MEX

Terms: NO SALE NO FEE • FREE ADVICE • INTERNET PROMOTED
FULL COLOUR CATALOGUE • PAST CATALOGUES AVAILABLE
Contact our Specialist: Michael Matthews MRICS.IRRV.
Auctions held at Dreweatt Neate – Honiton,
205, High Street, Honiton, Devon EX14 1LQ
Tel: 01404 42404 or 01404 42162 Email mmatthews@dnfa.com

PLEASE MENTION MODEL ENGINEER WHEN REPLYING TO ADVERTS

CLOCKMAKING METALS AND BOOKS

CZ120 Compo Brass Sheet/Blanks, CZ121 Brass Bar
CZ126 Brass Tube, EN8 & Mild Steel, Std Silver Steel
Gauge Plate, Suspension Spring Steel
Wheel & Pinion Cutting, Horological Engineering
BRASS PRICES REDUCED
Send Two 1ST Class Stamps For Price List
I.T.COBB, 8 POPLAR AVENUE,
BIRSTALL, LEICESTER, LE4 3DU
TEL 0116 2676063 Email: ian@iantcobb.co.uk
www.iantcobb.co.uk

KENT SCALE ENGINEERING and SUPPLIES

PACK 'A' STEEL	PACK 'D' BRASS	PACK 'B' STEEL
1/8 x 1/2	1/8" x 1/2"	1/4" (2off)
1/8 x 3/4	1/8" x 1"	3/8"
1/8 x 1	1/8" x 1/8"	1/2" (2off)
1/4 x 1/2	1/4" x 1/4"	5/8"
1/4 x 3/4	1/8" dia	3/4" (2off)
1/2 x 1	1/4" dia	7/8"
1/4 x 1/4	3/8" dia	
3/8 x 3/8	1/2" dia (2off)	
1/2 x 1/2	1" dia (6" long)	
3/4 x 3/4		
£10	£22	£14

P&P £5.95 Per order

We also stock BA fasteners and a vast Range of model engineering materials.

Order at: 01795 665577 or www.kentscale.co.uk

MODEL ENGINEERING MATERIALS

Model Engineering Supplies (Bexhill)

www.model-engineering.co.uk
Email: diesel@17bexhill.fsnet.co.uk

MODEL LOCO ROLLING STOCK COLOURED BROCHURE £1.75 INC P/P.
USED STOCK LIST £1.00 INC. P/P.
VISIT OUR SHOP FOR GOOD USED LATHES AND TOOLING PLUS RAW MATERIALS AND FASTENERS.

PHONE/FAX. 01424 223702
MOBILE 07743 337243

17, SEA ROAD, BEXHILL ON SEA,
EAST SUSSEX. TN40 1EE.

CASTINGS & DRAWINGS FOR 6 STEAM BOILER FEED PUMPS

Also chequer plate silicone O-rings tapping tool

CASTINGS & DRAWINGS FOR 10 DIFFERENT MILL ENGINES BOTH SLIDE & CORLISS VALVE

For Details S.A.E. 9"x4"

SOUTHWORTH ENGINES
6 KENNET VALE
CHESTERFIELD S40 4EW

www.wshop.freeserve.co.uk
Tel: 01246 279153

ALL 3½ GAUGE LOCO's WANTED

Tich, Juliet, Rob Roy, Firefly, Jubilee, Maisie, Doris, GWR Hall, Britannia, Hielan Lassie, etc. Partbuilt or finished. Nationwide Coverage. For a friendly and personal service, any distance

Please telephone Graham
0121 358 4320

ALL TRACTIONS ENGINES WANTED

Minnie, Royal Chester, Thetford Town, Burrel Compound, Roller, Steam Wagon, Burrell, Allchin, etc. 1" upto 3" PARTBUILT OR FINISHED in any condition. For a friendly and personal service, any distance.

Please telephone Graham
0121 358 4320

BA FASTENERS IN BRASS STEEL & STAINLESS

SPLIT PINS, TAPER PINS, ROLL PINS, TAPS, DIES, DRILLS, NUTS WASHERS, RIVETS, MATERIALS

Send Stamped addressed envelope plus two first class stamps for 28 Page List (Overseas £1.50) 'Quote Me'

"ITEMS" MAIL ORDER LTD,
46, ST. MARTINS ROAD, NORTH LEVERTON,
RETFORD NOTTINGHAMSHIRE DN22 0AU
Telephone 01427 884319 Fax 01427 884319

Wanted - all Loco Blueprints. Tel: 01983 293633 or Fax: 01983 297755. (T)

CLOCK CONSTRUCTION & REPAIR

Books by John Wilding and W.R. Smith
Free Catalogue
01420 487 747
www.ritetimepublishing.com

The Miniature Railway Supply Co. Ltd

www.miniaturerailwaysupply.com
Phone / Fax
01442 214702

TO ADVERTISE PLEASE CALL TONY ON 01689 886650

Boxford Lathe Model AVD 111-371-85 with many extras. £750. Tel: 01623 406608 (Notts).

Pair of fully machined cast aluminium rear wheel casting (4 halves) suit 3" Burrell Traction Engine. £40. Tel: 01733 571673.

Complete set drawings and gears for 3" Foden steam lorry and long chassis members. £70. Tel: 01778 345142.

Micromodels 1950's card models wanted by collector. Tel: 01609 775245.

steam-models.uk.com

Selection of steam wagons with prices from £1500

Richard Evison
Steam-models.uk.com
31/32 South Street, Riddings, Alfreton, Derbyshire DE55 4EJ. Tel. & Fax. 01773 541527
Many more steam items available.
Take a look at me website
www.steam-models.uk.com

CALL TONY ROBERTSON ON 01689 886650

ENGINEERS TOOL ROOM

The tool supplier for Professional & Model Engineers

CUTTING TOOLS: HSS – COBALT – COATED

Drills: Metric, Fractional, Jobbers, Long Series, Boxed Sets

Reaming: Metric, Fractional Hand and Machine.

Threading: Taps, Straight Flute, Spiral Flute, Boxed Sets, Metric, Imperial, Unified, BA.

Dies: Split Dies, Solid Dies, Die Nuts, Metric, Imperial, Unified, BA.

Milling: End Mills, Slot Drills Plain and Screw Shank, Horizontal Cutters, Slitting Saws, Collets.

Turning: HSS Tool Bits, Tungsten Carbide Tipped Turning Tools, Insert Tools, Collets.

Measuring: Micrometers, Verniers, Dividers, Callipers, Setting up Tools

Workshop Machinery: Lathes, Milling Machines, Pillar Drills, Band Saws

Machining Services: full machining service available, turning, milling, grinding, wire and spark eroding, tool and mould making

"New" Tool Catalogue available FREE – Send for one today

CHECK OUT OUR SPECIFICATIONS & PRICES BEFORE ORDERING YOUR MACHINES – Contact us for a Quotation

Part Exchange on some machine tools welcomed

Tel: 01443 442651 Fax: 01443 435726 Mobile 07770 988840
Web Site: www.engineerstoolroom.co.uk
Email: regpugh@aol.com
UNIT 28, ENTERPRISE CENTRE, LLWYNYPIA ROAD, TONYPANDY, RHONDDA CF40 2ET

SERVICES

Paul Gammon
Technical Services

STAINLESS STEEL SUPERHEATERS
WATER PIPE CONNECTOR KITS
PAINT LINING PEN 1–4

4 Hurst Road, Epsom, Surrey KY19 8SJ
Fax + Tel: 01372 729726
Email: pgtecser@yahoo.co.uk
SAE all enquiries please

BOOST PHASE CONVERTERS

- Price Guarantee
- Performance Guarantee
- 3 Year Warranty
- Worldwide Delivery
- Outstanding Design
- Comprehensive Support

Boost Energy Systems
Park Farm, West End Lane,
Warfield, Berkshire RG42 5RH
Tel: 01344 303 311
Fax: 01344 303 312
Mob. 07952 717960
www.boost-energy.com
info@boost-energy.com

HIGH QUALITY UK PHASE CONVERTERS SINCE 1957

ALL 5" GAUGE LOCO's WANTED

Hunslet, Jinty, Simplex, Speedy, BR Class 2, Horwich crab BR 8400 tank, Maid of Kent, Black Five, Jubilee, Royal Engineer, B1 Springbok, Torquay Manor, Castle, A3/A4 etc. Partbuilt or finished. Nationwide Coverage. For a friendly and personal service, any distance.

Please telephone Graham 0121 358 4320

Bidwells

Myford Super 7 on stand £1275, Centec Mill 2A £775, Boxford & Myford Vert Slides £p.o.a., Medding 10SP. Pillar DR £395, Boxford Lathe BVD QCTP £875, Various 6" 4 Jaw chucks, Myford £p.o.a., various wood M/C's. Ask for details

Contact Mike on Tel: 01245 222743 (Essex)

BLACK-IT!

Easy to use Chemical Blacking for Iron and Steel
Produces a professional satin black finish in less than 15 minutes.

Standard Kit (4 x 500ml) £30.99
Large Kit (4 x 2 litres) £71.99
BLACK-IT! for Brass £21.00
All prices inc. VAT & Delivery

Pixel-Plus, Bryncroes, Pwllheli, Gwynedd, LL53 8EH
Tel: 01758-730356 Fax: 08700-523497 Credit Cards accepted.
More details on our website at **www.black-it.co.uk**

Wanted: 500 yards 3 ½" x 5" gauge brass flat bottom track. Must be good condition. Fair price paid. Distance no object.

Also Required: Well engineered 5" guage Halton Tank (Copper Boiler) Locomotive. High Price Paid. Private Box No. 007 (London Area).

For Sale - contents of a small toolmaking workshop: milling machines, lathes, surface grinders, spark erosion machines, measuring equipment, lot's of tooling and steel bar and tube, etc, etc. Call Mike Carson on 01628 665017.

PARTBUILT MODELS BOUGHT. All locomotives, at any stage of construction. Completed models also bought regardless of condition. Traction engines and all Stuart stationary engines wanted – beam, vertical, horizontal etc, part built or complete. Will travel any distance. Please telephone Graham, 0121 358 4320. (T)

for real Grandad's Toys

Clay Bricks, roof & floor Tiles

BRASS HINGES:
4mm x 4mmx 6mm x 5mm Butt
6mm x 11mm x 8mm x 33mm Gate
90mm x 6mm Piano

for further information and a free sample pack, send ssae to:

Grandad's Toys

117 High Street
Burton Latimer
Nr. Kettering. NN15 5RL
SHOP, FAIRS, MAIL ORDER & TRADE
Major Credit Cards accepted
www.grandadtoys.co.uk
Tel: 01536 722 822

COPPER TUBE, SHEET, BAR

and other non-ferrous metals.
Send 9" x 4" SAE for lists.
R. Fardell, 49 Manor Road, Farnley Tyas, Huddersfield HD4 6UL
Tel: 01484 661081

FYNE FORT FITTINGS

(Freshwater, IOW)
The Steam Fitting Specialists
Clarence Boatyard, East Cowes, Isle of Wight, PO32 6EZ, UK
Tel: 01983 293633 Fax: 01983 297755
List still free send large SAE and 3 1st class stamps
www.fynefort.co.uk

For Sale: Original as new information/training videos. The Welding Institute: 'Oxy-Acetylene Welding' also 'MIG welding' Rudy Kouhoupt: 'Grinding Lathe Tools' also 'Operating a Shaper' Ted Jolliffe: 'A taste of Turning' Woodworking: 'Shop Secrets from Master Craftsmen' Also various MEW magazines. Please phone Steve 01527 543869 (Worcs).

CALL TONY ROBERTSON ON 01689 886650

CHEDDAR MODELS

Let us quote all your Copper Boiler requirements
Manufacturers of Garden Rail Locomotives & Marine Steam Plants
Tel: 01934 744634 Fax: 01934 744733
www.modelsteam.co.uk
Email: sales@modelsteam.co.uk

TONY GREEN
Steam Models

Stationery, Wheeled and Marine Models – Mamod, Wilesco, Unit Steam Engines and MSS. Spares for most models including Hornby Rocket. Secondhand, Restored and Collectors Models sometimes available. MSS Loco and Spares. Steam and R.C. Boat Kits – Midwest, Artesania Latina and Mantua Range.

SEE US AT MAJOR EXHIBITIONS AND RALLIES.

Visit our web site: **www.tgsm.co.uk**

or send four first class stamps for full catalogue to:
19 Station Road, Thorpe on the Hill, Lincoln LN6 9BS
Tel: 01522 681989 Fax: 01522 683497
Email: tgsml@btinternet.com
MAJOR CREDIT CARDS ACCEPTED

All live steam engines **WANTED**
Also model steam launches and battleships etc.
Any size, any condition.
Will collect and pay cash. Nationwide.

Tel: 01507 359033

Free Metal catalogue and price list.
Visit www.metal-trader.co.uk or
Telephone 01285 760818

Wanted: 5" gauge City of Truro, Partly built or castings or what you have. Tel: 01872 274006 (Cornwall).
Silver Solder, low melting point 3 x 1 x 600mm. Only 60 sticks to sell. £1.50 each. Tel: 01754 874162 (Lincs).

Wanted: 3½" gauge 4-6-0 or 4-6-2 with boiler certificate. Well built, detailed. Can collect. Tel: 0208 6421158 (Surrey).
Set Castings, Drawings, 5" Britannia. £399. Set 5" King. £299. Buyer Collects. Tel: 01823 490018 (Taunton).

WANTED:
Hornby Dublo Duchess of Athol Train Set from 1945 - 55 period.
Tel: 01254 826425
(Clitheroe)

MYFORD SUPER 7B
A superb little used machine, power cross feed, 3 jaw chuck, collet chuck, faceplate, 4 way tool post, light etc. £2,400 ono. Private sale.
Phone 07778 198331 (Worcestershire).

Mallard Metal Packs Ltd
53 Jasmin Croft, Kings Heath, Birmingham, B14 5AX.
Tel/Fax: 0121 624 0302. E-mail: sales@mallardmetals.co.uk.
Supplier of all Ferrous & Non-Ferrous Metals.
NO MINIMUM QUANTITY ***CATALOGUE AVAILABLE***
Worldwide mail order. www.mallardmetals.co.uk

NEIL GRIFFIN
- St.Albans, Hertfordshire
Engineering Services
Machining for Model Engineers
From drawing, sketch, pattern etc.
Friendly personal service.
Telephone / Fax: 01727 752865
Mobile: 07966 195910

THE 10NHP McLAREN ROAD LOCOMOTIVE
THE ENGINE WITH BUILT-IN PERFORMANCE

Drawings and castings for this engine in 3" and 4" scales are now available.
A 6" scale version is under development. Some parts are ready now.
A video of both 3" and 4" sizes of engine at work is available at £6.00 per copy. Carriage included.
INJECTORS 3", 4", and 6" scale, Penberthy-style, up to 200 PSI W/P.
FITTINGS Water gauges and lifters, whistles and sirens, lubricators, steam and water valves.
RUBBER TYRES Now available from 2" to 6" scale, e.g. 2" Fowler –£53.50
3" Marshall – £120.00, 4" Foster or Garrett – £214.00, 41/2" Burrell – £214.00
WATER TREATMENT Heatreat 502, litre or half-litre bottles.
LUBRICATING AND STEAM OILS Litre bottles. POWELL BALER in 3" scale, drawings and photographs
For further details please contact:
Double B Designs, 172 Melford Road, Sudbury, Suffolk CO10 1JZ
Tel./Fax. 01787 375819

---

50 x 1" SQ Tipped Turning Tools **£100**
23 x Drills 11/16 - 17/32 **£50**
1" - 2" Micrometer **£15**
0" - 4" Micrometer **£25**
2" - 8" Internal Micrometer **£25**
4" Chuck Lathe **£75**

Tel: 0151 426 2331
(Merseyside)

DRAWINGS AND CASTINGS

4" scale *Tasker* "Little Giant" Steam Tractor
3" scale *Rider-Ericsson* Hot Air Pumping Engine
3" & 5" x 4" Marine Compound Engine

For full details send a large SAE - or see our website.

Camden Miniature Steam Services
Barrow Farm, Rode, Frome, Somerset. BA11 6PS
www.camdenmin.co.uk Tel: 01373 - 830151

Myford Lathe, wired with reversing switch, on Myford Cabinet 240v & 1/2" HP motor, collett chuck, with selection of collets, 3 jaw chuck. Quick change threading gearbox, Front/Rear side toolposts. Capstan Rear Turret, with stops. Normal Cross-slide, 2 x fixed steady. 4 way toolholder. All in good condition, plus box of Miscellaneous additions.

Price £1225 o.n.o.

Tel: 01803 833134

Laser cut parts, frames, cabs, tender kits, stretchers, spokes, hornplates, etc. Tel: 01302 721611 (Doncaster).

PHOENIX PRECISION
The Railway Livery Specialists
for authentic colour paints and waterslide transfers
Send S.A.E. and 50p (stamps accepted) for a copy of our full catalogue to:-
PHOENIX PRECISION PAINTS LTD
P.O.Box 359, CHELTENHAM Glos. GL52 3Y
e-mail: sales@phoenix-paints.co.uk Tel: (01242) 575326 website: www.phoenix-paints.co.uk

Non-Ferrous material supplied in all forms, tailored to your need by size & quantity. Aluminium, Brass, Copper & Stainless steel, Silver steel, Gauge plate, B.M.S. steels.

Catalogue free.

P.L. Hill (Sales) Ltd

2, West Street, Bradford, BD2 3BS

Tel/Fax: 01274 632059

Email: plhillsales@aol.com www.plhillsales.com

BRUNELL MODELS

Coombers Rotary Engine

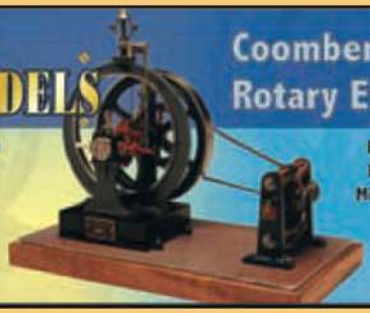

www.brunell.com
order on line

Fully illustrated catalogue: A4 size.
Over 40 models, some in full colour
UK £5.50 - Overseas £6.95
Sterling cheque or Credit card only

Brunell Models, Unit 32, Heysham Business Park, Middleton Road, Heysham, Lancs. LA3 3PP

email: sales@brunell.com
Fax/Ans 01524 855887

BCA. Used Machines - choice of various/spec's & prices. Contact US Tenga for current stock. Tel: 01425 622567.

NEW! - Lower cost, compact, high performance speed controller and motor combination.

The new CL range features start, stop and emergency stop buttons and speed control with forward, reverse and jog. It comes complete with high quality motor and is ready to mount, plug in and go!

Call us now for more information and friendly advice on
01925 444773
or visit www.newton-tesla.com

From only £390 inc VAT

NEWTON TESLA
The Driving Force in Automation

Unit G18, Warrington Business Park, Long Lane, Warrington, Cheshire WA2 8TX, UK

Carr's Solders

Cadbury Camp Lane,
Clapton in Gordano, Bristol. BS20 7SD
Tel:**01 275 852 027** Fax:**01 275 810 555**
Email: sales@finescale.org.uk
www.finescale.org.uk

ALL MODEL STEAM ENGINES REQUIRED

Any gauge, any condition including static models, unfinished projects OR JUST PLAIN WORN OUT!
Also Stuart Turner, Bing Marklin, Traction Engines and Boats.
Even complete collections. Will call and pay cash. Distance no object!! Available 7 days a week

Tel: 01507 358808

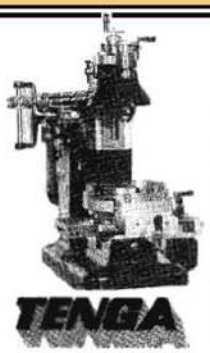

B.C.A. MkIII Universal Jig Boring & Milling Machine

A precision & robust machine for producing many types of components. Milling, boring, drilling, indexing operations for example.

Swivel R&F head • 10 Spindle Speeds • 8" Rotary Table on compound slides • X.Y.Z. Movements • Many other features

Widely used in all types of manufacturing and model engineering.

Used Models - choice available.
Ring for information & inspection by appointment.

TENGA

Telephone (01425) 622567
Fax (01425) 622789

Tenga Eng Co Ltd
Machine Tool Div, Britannia House
Stem Lane Ind Estate, New Milton, Hants UK. BH25 5NN

ALL 7¼" GAUGE LOCOS WANTED

Hunslet, Hercules, Jessie, Romulus, Bridge, Dart, Holmeside, Paddington, GWR Mogul-43xx, GWR King, Black Five, A3, B1, Britannia-all BR type standard gauge tender engines, etc, and Narrow Gauge engines.
PARTBUILT OR FINISHED in any condition.
For a friendly and personal service, any distance.

Please telephone Graham
0121 358 4320

Wanted: Castings wheels, cylinders, etc, w.h.y. for Reeves 5" gauge Fury, Royal Engineer, Kings Own or Leander. Also drawings for Leander. Tel: 01428 605490 (Surrey

Drawing/All castings for 5" Scale Scot/Fury model Loco Cylinders. All GM. £400. Tel: 0161 370992.

Simplex and Sweet Pea Chassis for sale. Cylinders, Wheels machined. Ring for Details. Tel: 01845 577016 (Thirsk

Selling up: 3½ guage '0' G 16 mm NG steam locos for sale. Tel: 0161 486 1934 (Cheshire).

2" Clayton Waggon Finished. 2" Clayton Waggon Part Built 85%. Sensible Prices. Ring for Details. Tel: 01884 256457 (Devon).

2-6-4T Chassis Part Complete. All castings/drawings for 5" Scale Model Tank Engine. £450. Tel: 0161 370992.

Wanted: Email contact with owner(s) of 2" Fowler ploughing engine. I am contemplating buying or building. Carson(Canada) carjack@shaw.ca

Victoria Elliot Horizontal milling machine, ex Technical College. Metric dials. Good condition. 3 phase. Seen working. £275. Tel: 01388 718334 (Co. Durham).

Hand Shaper Adept No. 2. Good condition. Buyer collects. £100. Tel: 01424 733083 (Bexhill).

Emco Toolpost Grinder. Virtually new and in box. £120. Tel: 0114 2712731 or 01226 759204 (South Yorkshire).

Myford ML7 Lathe, stand, 3 & 4 jaw chucks, change wheels, range of tools, manuals. £750. Tel: 01508 492559 (Norwich).

Cowell 90 Lathe 3 & 4 Jaw Chucks, Manual. £275. Tel: 01394 282906 (Suffolk).

Atlas Bench Lathe 36" Centres, 12" Swing. Quick change gearbox, lathe. used, original Paperwork, 3/4 Jaw Chucks. £650. Tel: 0151 3366377 (Cheshire).

Peatol Lathe with Motor. Lots of Accessories including vertical slide. Little used. £180 o.n.o. Tel: 01473 832032 (Suffolk).

Wanted: Four-way Toolpost Raglan Littlejohn 5 inch. Tel: 01527 873112 (Worcs).

Wanted: Myford ML7 Handbook, Headstock front guard, T. Slide & x slide Bezels, Square Toolpost, three point steady. Tel: Day 02476 644475 (Corley Moor).

"Smart & Brown 9" Sable lathe, well equipped, delivery within 100 miltes. £599. Tel: 01223 248483 (Cambridge).

Closing Home Workshop. Many small items for sale. Also MEW magazines issues 19 to 103. Tel: 01780 782581 (Peterborough).

Myford Super 7 with gearbox on metal cabinet. Fully equipped with 3 and 4 jaw chuck. Excellent condition. £750. Tel: 01270 877195 (Staffs).

Myford ML7 with TRI-LEVA and screw cutting gearbox plus Myford cabinet. Excellent condition, includes 3 & 4 jaw chucks/faceplate. Various metals also available. £900. Tel: 01284 789477 (Suffolk).

For Sale: Boley and Leinen watch makers lathe original box, many accessories, books, catalogues etc. Offers. Tel: Eve 01749 672707 (Somerset)

Model Engineer individual issues and full volumes. Send for list through www.cdmec.co.uk or Tel: Phil 01992 572078 (Chingford).

OPTICAL CENTRE PUNCHES

Simply align scribed lines with cross hairs in lens. Remove lens and replace with punch and strike punch.

Order Code	Price
OCP-2	£34

Line up scribed lines with either lens (one containing cross hair, the other a circle). Whilst carefully holding the outer body, lift up the top section and rotate in desired direction until location is felt, then strike punch

Order Code	Price
OCP-3	£42.50

MACHINE LAMPS

Flexible Arm

240 volt supply
12 volt 20 watt bulb

Stem Length (mm)	Order Code	Price
500	JH20FT	£24

240 volt supply
12 volt 50 watt bulb

Stem Length (mm)	Order Code	Price
200 + 260	JW55TM	£45
400 + 400	JW55TL	£47

240 volt supply
12 volt 20 watt bulb

Arm Length (mm)	Order Code	Price
200 + 200	JH20RTM	£29
400 + 400	JH20RTL	£31

Flourescent Magnifier Lamp

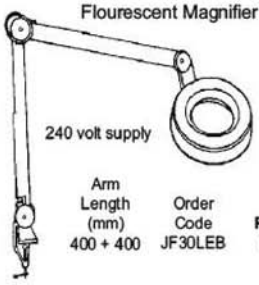

240 volt supply

Arm Length (mm)	Order Code	Price
400 + 400	JF30LEB	£49

Prices subject to the addition of carriage & V.A.T. Please add £3 for optical punches & £5.00 for lamps.

Rotagrip Ltd
16-20 Lodge Road, Hockley, Birmingham B18 5PN
Tel 0845 100 1566 Fax 0845 100 9188

Hy4 Precision Products

Brings to You Exceptional Quality Measuring Equipment and Small Tools at Unbeatable Prices

SALE NOW ON

Digital Calipers From £19.99

- ✓ Moisture Proof.
- ✓ Inch/mm conversion, zero at any position, locking screw and data output.
- ✓ Resolution: 0.01mm / 0.0005"
- ✓ Includes: 2 batteries (1 inserted), instructions and comes supplied in protective case.

To Order Visit Our Website

www.hy4.co.uk

Next Day Despatch

Size	MRSP	Sale Price
15cm/6"	£22.99	£19.99
20cm/8"	£39.99	£30.99
30cm/12"	£48.99	£39.99
100cm/40"	£350.00	£299.99
Data output from SPC. Resolution 0.01mm/0.0005"		

Our aim is to provide customers with a **fast and efficient** service supplying quality tools and exceptional competitive prices!

Our website www.hy4.co.uk offers 24 hour access to a unique range of Engineering Equipment and Tools available for next day despatch
All our products carry a full UK warranty.
Hy4 Precision Products Ltd Web: www.hy4.co.uk Email: info@hy4.co.uk

---

Established 1959

TRACY TOOLS LTD.

2 MAYOR'S AVENUE, DARTMOUTH, SOUTH DEVON TQ6 9NF
Telephone: (01803) 833134 • Fax: (01803) 834588 *Credit Card Hotline: 01803 839500 (minimum £10)*

PLEASE ADD 20% TO COVER VAT, 1st CLASS PACKAGE & POST

See us at the Taunton Model Engineers Exhibition

ALWAYS AVAILABLE

SET No.			
1.	***MODEL ENG TAPS & DIES SET (2 Taps each size)*** 1/8 x 40, 5/32 x 40, 3/16 x 40, 7/32 x 40, 1/4 x 40, 9/32 x 32, 5/16 x 32, 3/8 x 32	ALSO AVAILABLE IN WOODEN BOXES	***TAPS: £18 SET*** — ***DIES £18 SET***
2.	***SPECIAL MODEL ENG. SET (2 Taps each size)*** 1/4 x 32, 5/32 x 40, 3/16 x 40, 3/8 x 40, 7/16 x 32, 7/16 x 40, 1/2 x 32, 1/2 x 40		***TAPS £22 SET*** — ***DIES £22 SET***
3.	***BA TAP SET (2 Taps each size) & BA DIE SET:*** 0, 1, 2, 3, 4, 5, 6, 7, 8, 9, 10 BA		***TAPS £18 SET*** — ***DIES £20 SET***
4.	***26 TPI TAP SET (2 Taps each size) & 26 TPI DIE SET (CYCLE OR BRASS THREAD)*** 1/4 x 26, 5/16 x 26, 3/8 x 26, 7/16 x 26, 1/2 x 26		***TAPS £18 SET*** — ***DIES £18 SET***
5.	***BSF TAP SET (2 Taps each size) & BSF DIE SET:*** 3/16, 1/4, 5/16, 3/8, 7/16, 1/2		***TAPS £18 SET*** — ***DIES £18 SET***
6.	***BSF TAP SET (2 Taps each size) & BSF DIE SET:*** 3/16, 5/8, 3/4, 7/8, 1"		***TAPS £18 SET*** — ***DIES £18 SET***
7.	***BSW TAP SET (2 Taps each size) & BSW DIES:*** 1/8, 5/32, 3/16, 1/4, 5/32, 5/16, 3/8, 7/16, 1/2		***TAPS £20 SET*** — ***DIES £20 SET***
8.	***BSW TAP SET (2 Taps each size) & BSW DIES:*** 5/16, 5/8, 3/4, 7/8, 1"		***TAPS £18 SET*** — ***DIES £18 SET***
9.	***METRIC COARSE TAP SET (2 Taps each size) & METRIC DIE SET:*** 2, 3, 4, 5, 6, 7, 8, 9, 10, 12 m/m		***TAPS £20 SET*** — ***DIES £20 SET***
10.	***METRIC COARSE TAP SET (2 Taps each size) & METRIC DIE SET:*** 14, 16, 18, 20, 22, 24 m/m		***TAPS £25 SET*** — ***DIES £25 SET***
11.	***UNF OR UNC TAP SET (2 Taps each size) & DIE SET:*** 0 to 12 UNF or 1-12 UNC		***TAPS £15 SET*** — ***DIES £18 SET***
12.	***UNF OR UNC TAP SET (2 Taps each size) & DIE SET:*** 1/8, 3/16, 1/4, 5/16, 3/8, 7/16, 1/2		***TAPS £18 SET*** — ***DIES £18 SET***
13.	***UNF OR UNC TAP SET (2 Taps each size) & DIE SET:*** 5/16, 5/8, 3/4, 7/8, 1"		***TAPS £18 SET*** — ***DIES £18 SET***
14.	***GAS (BSP) PIPE SET:*** 1/8, 1/4, 3/8, 1/2, 5/8, 3/4 (2 Taps each size)		***TAPS £30 SET*** — ***DIES £25 SET***
15.	***METRIC FINE PITCH SETS*** (10 sizes from 3 - 12 m/m) TAPS & DIES		***(10) TAPS £18 SET*** — ***DIES £25 SET***
16.	***METRIC FINE PITCH SETS*** (6 sizes from 14 - 24 m/m) TAPS & DIES		***(6) TAPS £18 SET*** — ***DIES £25 SET***
17.	***ENDMILL SET (THREADED SHANK)*** [1/8, 3/16, 1/4, 5/16, 3/8, 7/16, 1/2] or (m/m 3, 4, 5, 6, 7, 8, 10, 12 m/m]		***£20 EACH SET***
18.	***SLOT DRILL SET (THREADED SHANK)*** [1/8, 3/16, 1/4, 5/16, 3/8, 7/16, 1/2] or (m/m 3, 4, 5, 6, 7, 8, 10, 12 m/m]		***£20 EACH SET***
19.	***ENDMILL SET,*** 5/8, 3/4, 7/8, 1" DIA, WITH 3/8 THREADED SHANK TO FIT COLLET CHUCK		***£25 SET OF 4***
20.	***COUNTERBORE SET (FOR SPOTFACING)*** [3/16, 1/4, 5/16, 3/8, 7/16, 1/2] OR [m/m 3, 4, 5, 6, 8 m/m]		***£30 EACH SET***
21.	***REAMER SET (STRAIGHT SHANK)*** [1/16, 3/32, 1/8, 5/32, 3/16, 1/4, 5/16, 3/8, 7/16, 1/2] or [m/m 2, 3, 4, 5, 6, 7, 8, 10, 12 m/m]		***£30 EACH SET***
22.	***DRILLS (LONG SERIES)*** 10 VARIOUS SIZES BETWEEN 1/16 - 5/16 STRAIGHT SHANK		***£6 LOT***
23.	***MORSE TAPER SOCKET REAMERS (FOR CLEANING MORSE TAPERS)*** — *No. 0, 1, 2 M/T @ £18 EA.* — *No. 3 @ £22.* — *No. 4, 5, 6 m/t @ £35*		
	BALL-NOSE MILLING CUTTERS (THREADED SHANK) 1/8, 3/16, 1/4,		***£12 SET***
24.	***D-BIT SET (FOR DRILLING SQUARE BOTTOM HOLES)*** 1/16, 1/8, 3/16, 1/4, 5/16, 3/8, 7/16, 1/2 DIA		***£25 SET***
25.	***SLITTING SAW SET (HS) 3 PIECES,*** BETWEEN 1/64, - 1/16 (FINE TEETH)	*3" DIA @ £6 SET 2" DIA @ £5 SET*	
26.	***CENTRE DRILL SET (HS)*** 1/8, 3/16, 1/4, 5/16, 7/16 ***@ £5 SET***	1/2 INDEXABLE ENDMILL (THREADED SHANK) ***@ £14 WITH TIP***	
27.	***TAPER SHANK DRILLS (No. 1 M/T)*** 10 VARIOUS SIZES UP TO 1/2 DIA		***@ £10***
28.	***DRILL SETS (HS) GROUND FLUTES,*** *No. 1 - 60 A - Z @ £18,* — *1/16 - 1/2 1 - 13m/m @ £16,* — *1 - 6m/m x .1m/m @ £18,* — *6 - 10m/m @ £25 SET*		
	DIAL GAUGES (M/M OR IMP) ***@ £10 EACH*** — ***STAINLESS STEEL DIAL CALIPERS*** (M/M OR IMP) ***@ £12 EACH***	***MAGNETIC BASE @ £15 EACH***	
	WOODRUFFE CUTTER SET 1/4, 3/16, 3/8 ***@ £15 SET*** — ***EXPANDING REAMER SET,*** FROM 1/4 - 1/2 ***@ £45 BOX***	***RE-THREADING FILES*** (IMP OR M/M) ***@ £6 EACH***	
29.	***INVOLUTE GEAR CUTTERS*** - ALL SIZES FROM 2 DP - 120 DP, INCL. MODULE & CP. [ALSO STUB, BEVEL & SPROCKET CHAIN]		***@ £18 EACH***
30.	***TAPER PIN REAMER SET.*** 1/16, 5/64, 3/32, 7/64, 1/8, 5/32, 11/64, 3/16, 1/4, 7/16 (10 PIECE SET - SHEFFIELD MADE)		***@ £30 SET***
31.	***COLLET CHUCK, TO TAKE THREADED ENDMILLS,*** UP TO 1" DIA (2m/t, 3 m/t, R8 SHANK) IN STRONG WOODEN BOX		***@ £70 COMPLETE***
32.	***LATHE TOOLS (SET OF 8)*** 1/4 SQUARE VARIOUS SHAPES	IN HSS ***@ £15*** SET, OR CARBIDE TIPPED ***@ £18 SET***	
33.	***REVOLVING LATHE CENTRES,*** 1 M/T ***@ £18;*** 2,3 M/T ***@20*** — ***DRILL GAUGES,*** IMP, M/M , LETTER, NUMBER ***@ £4 EACH***	10 SMALL BURRS ***@ £5 LOT***	
34.	***DRILLS*** WITH 1/2 SHANK 9/16, 5/8, 3/4, 7/8, 1" DIA ***@ £18 SET*** — ***DRILLS*** BELOW 1/4, DIA ***@ 50p ALL SIZES***	***COVENTRY DIEHEAD CHASES*** - ALL SIZES	
35.	***3-WAY PRECISION ANGLE VICE, 50 m/m JAWS, 180 DEGREE COMPLETE CIRCLE***	***@ £80 + POSTAGE***	
36.	***INDEXABLE TOOL HOLDERS (SWISS)*** 3/8 SHANK OR 1/2 SHANK	***@ £10 EACH, WITH TIP [EXTRA TIPS £2]***	
37.	***PARTING OFF TOOLHOLDERS, COMPLETE WITH COBALT BLADE.***	5/16 ***@ £13,*** 1/2 ***@ £14,*** 5/16 ***@ £14,*** 3/4 ***@ £16 EACH***	
38.	***VARIOUS DRILLS,*** BELOW 1/4 DIA. ***10 EACH.*** STUB, QUICK SPIRAL, SLOW SPIRAL, LEFT HAND, ***@ £5 EACH TYPE***		
39.	***KNURLING TOOLS.*** 2 WHEEL SIZE ***@ £6,*** 6 WHEEL SIZE ***@ £10 (SPARE KNURLS £2 EACH)***		
40.	***ROHM PRECISION DRILL CHUCKS,*** WITH No. 1 OR No. 2 MORSE TAPER ARBOR	5/16 ***@ £7,*** 3/8 ***@ £8,*** 1/2 ***@ £10***	

FOR UNITHREAD TAPS & INSERTS Call 01803 559595

Also: **Selection of Dovetail, Woodruffe, Ballnose, Concave, Spottacers, Broaches, Knurls, Carbide Centres, Cycle Taps & Dies, Boring Bars, Left Hand Tap & Dies, Milling Cutters, Reamers, Countersinks, Gear Cutters, Slitting Saws, Acme Taps, Diehead Chasers, Socket Reamers.** *These are available between 50% & 75% off list price*

Open: Monday to Friday 8am to 5pm – Sat to Noon Despatch by return. Overseas P&P P.O.A. Send for new complete Catalogue (Stamp Please)

BRITISH WARRIOR BRAND

HOME AND WORKSHOP MACHINERY

QUALITY USED MACHINE TOOLS

144 Maidstone Road, Foots Cray, Sidcup, Kent, DA14 5HS.

Telephone 020-8300 9070 – Evenings 01959 532199 – Facsimile 020-8309 6311

www.homeandworkshop.co.uk stevehwm@btopenworld.com

Opening Times: Monday-Friday 9am-5.30pm – Saturday Morning 9am-1pm

10 minutes from M25 – Junction 3 and South Circular – A205

£425
RJH pedestal 12" grinder

Worcester 18 ton power press, guarded
£1150 NOW Special £600

£2250
Elliot powered suface grinder "as good as it looks"

£2950
Harrison M250 lathe with 3000rpm top speed

A current photo of our small stock!

£625
RJH 4" linisher complete on dust extractor cabinet

£3750 NOW Special £3250
Colchester Bantam 2000 (very late model) complete with 3 & 4 jaw chucks

Centec vertical head, quill type fits 2A, 2B and 2C if you have the adapter

£775

Lockwood quad head 2MT and 3MT die sets, last few available

£40 each

Tom Senior M1 milling machine
£1400

£325
Rolling mills, 120mm very nice

Colchester Student 1800 lathe complete with 3 & 4 jaw chucks

£2950

Tom Senior 'E' Type vertical milling machine
Choice £2950-£3450

Boxford 1130, 5 1/2" x 30"

£2450

Viceroy precision screwcutting lathe

£675

Transit smile type body complete with Hiab 011 hydraulic crane includes legs

Please ring to view
£1750

Jafi Jarocin Universal milling machine, 49" x 12" powered all ways table, 40INT vertical head, 18 speeds 36 - 1800rpm

£2400

Boxford pedestal drill

£275

Asquith14-54 001 Mk.2 5MT radial drilling machine

£3950 Now special £2950

Kennedy bench type Hacksaw just in

£175

Equi-Spacer pitch circle drilling jig

£350

Ragian precision screwcutting lathe 5" x 24"

£1400

Vanco linisher, 1" wide belt

£245

Meritus spot welder 8kva

£425

Myford C7 Tri lever / capstan complete with collet chuck cut-off-slide

£875

£2250
Ajax turret milling machine in very good order with powered table just in

Boxford AUD, gearbox, power cross feed, cabinet stand & very nice

£1250

Precision two way table (size; 12" x 12")

£375

Lorch rare verticle slide

£425

Boxford PD5 bench drill

£195

Rishton buffer (The best buffer in its class)

£345

Edwards corner knotcher
£245

Tom Senior vertical / horizontal milling machine complete with powered table and coolant all driven of the same motor (immaculate)

£2450

Viceroy vertical milling machine, excellent condition

£1625

Still boxed Ex MOD as new Baty clock gauges, Imperial reads to .0005". Last few available!

£25 each

Crompton Parkinson Motors NEW 3/4HP ideal for Myford & Boxfords etc.

£150 Each

PLEASE PHONE 020 8300 9070 TO CHECK AVAILABILITY OR TO OBTAIN OUR LIST

DISTANCE NO PROBLEM!! DEFINITELY WORTH A VISIT ALL PRICES EXCLUSIVE OF V.A.T.

We also have a massive range of small tooling far too much to list!!

Just A Small Selection Of Our Current Stock Photographed!!

"We've got your workshop covered"

- 2-Axis DRO from £615 inc VAT
- Made in the UK
- 5 year no-fault warranty
- 10 Micron accuracy
- Myford fitting kit now available

newall

CHESTER UK LIMITED

CHESTER U.K. LIMITED
MACHINE AND TOOLING SPECIALISTS

DB8
Centre Height 105mm
MT3 Spindle Taper
Between Centres 400mm
125 - 2000rpm
PRICE
£699.00
Inc. FREE STAND

CESTRIAN MULTIFUNCTION MACHINE
Horizontal Milling, Angle Vertical Milling, Vertical Milling, Vertical Milling and Lathe all in one!
Table dimensions 470 x 160mm, MT3 Spindle taper, 0-2800 rpm variable, 0.55 Kw Motor
PRICE: £1995.00

COVENTRY LATHE (500mm)
Centre Height 166mm
between Centres 500mm
1.5kw Motor
Spindle speed 70 - 2000rpm
Other models include 750mm or 1000mm
PRICE: from £2526.00

EAGLE 30 MILL/DRILL
Drilling Capacity 32mm
End Milling Capacity 20mm
MT3/R8 Spindle Taper
Table Working Surface 730 x 210mm
1.1Kw 1.5hp Motor
PRICE: £899.00

CENTURION 3IN1
(Short bed version shown. Long bed version available)
Maximum swing 420mm, Spindle Bore 28mm
Lathe Motor $^3/_4$HP, Milling Head Motor $^3/_4$HP
Milling Table Size 475 x 160mm
Complete with Power Cross Feed, Leadscrew Guard, Lathe Tools, 3 Jaw Chuck and more ...
PRICE FROM: £1100.00

COBRA MILL
Drilling Capacity 10mm
End Milling Capacity 10mm
MT2 Spindle Taper
Table working surface 145 x 240mm
150w Motor
PRICE: £299.00

H110 BANDSAW
Max cutting capacity at 90°
Round 110mm
Square 100 x 150mm
550w Motor
Power 240volt
PRICE: £150.00

CONQUEST LATHE
Centre Height 90mm, MT3 Spindle Taper
Between Centres 325mm, 0-2500rpm
PRICE £345.00

Call for our FREE 36 page Colour Catalogue
Tel: 01244 - 531631
Fax: 01244 - 531331

Visit our website
www.chesteruk.net
For our Special Offers

Email us at
sales@chesteruk.net

PRICES ARE INCLUSIVE OF VAT AND DELIVERY UK MAINLAND ONLY

CHESTER UK LTD, Clwyd Close, Hawarden Ind. Park, Hawarden, Chester, CH5 3PZ
WATCH THIS SPACE FOR MORE GREAT OFFERS AND NEW PRODUCTS!!