FRAMES FOR SUB-£500 BATTERY LOCOS ● SCHOOLS CLASS CYLINDERS

THE MAGAZINE FOR MODEL ENGINEERS

ENGINEERING in Miniature

JULY 2023 | £5.49
07
9 770955 764210 >

Party Time

Celebrations at Melton Mowbray club

FORMING COMPLEX COPPER SHAPES USING CAD AND 3D PRINTING TECH

STUART MODELS

FOUNDED 1898

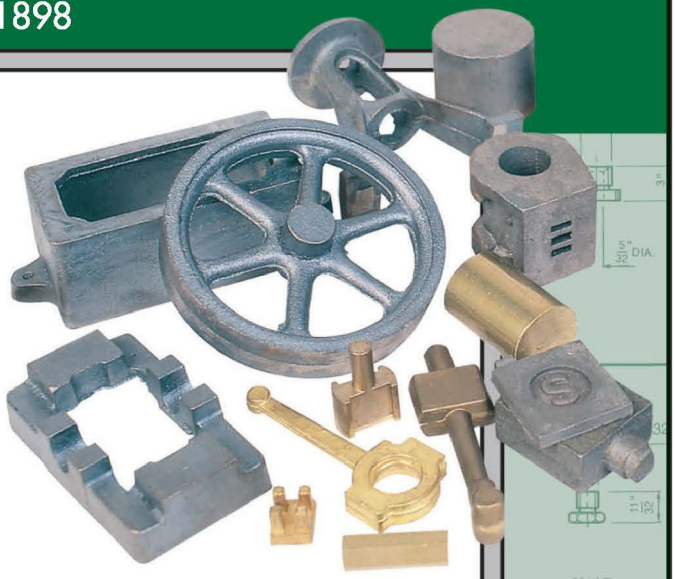

For the MODEL ENGINEER

SETS OF CASTINGS

We offer Sets of Castings suitable for both those starting out in model engineering as well as those looking for a new and challenging project.

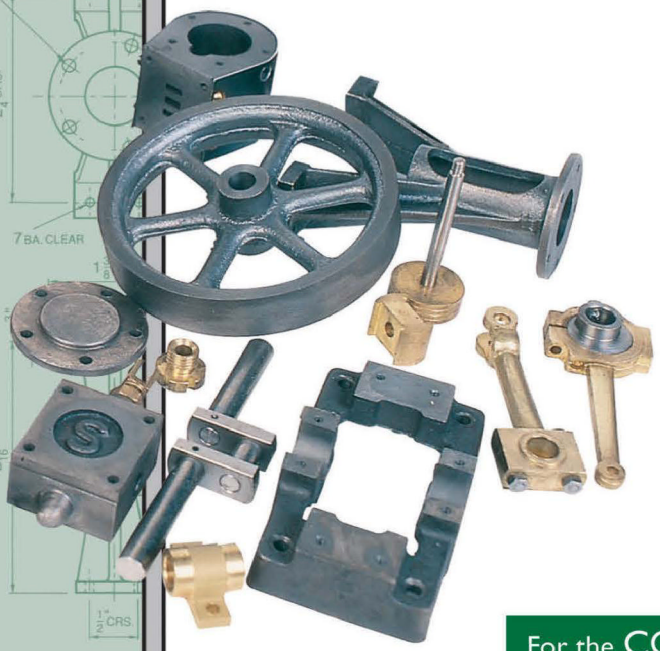

For the ENTHUSIAST

PRE-MACHINED KITS

Many of our engines are available as Pre-Machined Kits allowing you to finish the model with a set of spanners and simple hand tools.

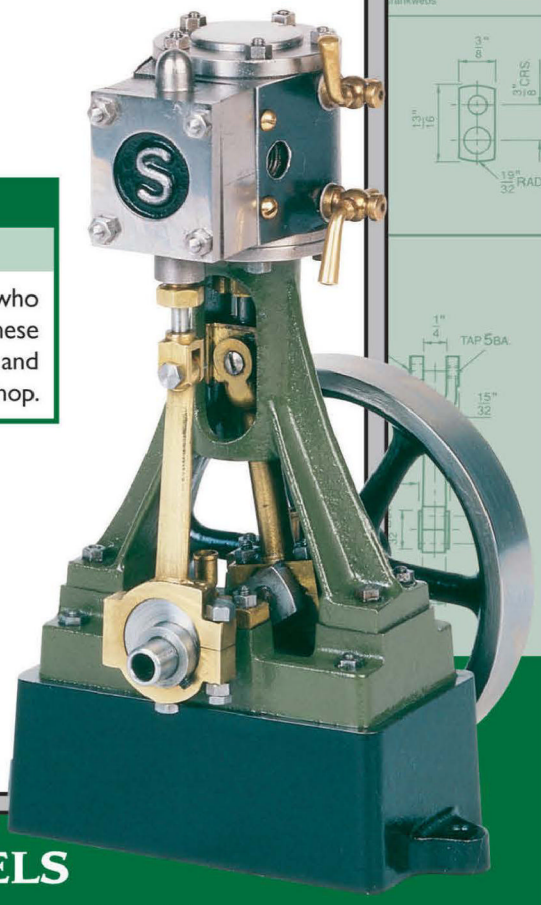

For the COLLECTOR

READY TO RUN MODELS

The perfect choice for anyone who has an interest in steam. These models are assembled, painted and thoroughly tested in our workshop.

CATALOGUE - £6.00

80 PAGE FULL COLOUR

Please send £6 for our eighty page comprehensive full colour catalogue which covers our entire range of models and accessories.

STUART MODELS

GROVE WORKS, WEST ROAD, BRIDPORT, DORSET, DT6 5JT

• TEL 01308 456859 • FAX 01308 458295 • www.stuartmodels.com •

CONTENTS

JULY 2023 Volume 45 Number 01

THE MAGAZINE FOR MODEL ENGINEERS
ENGINEERING in Miniature

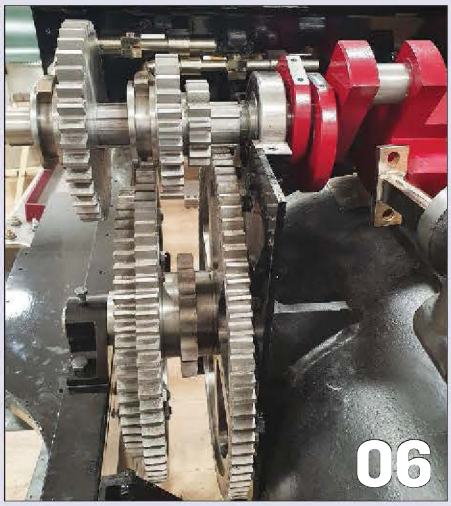

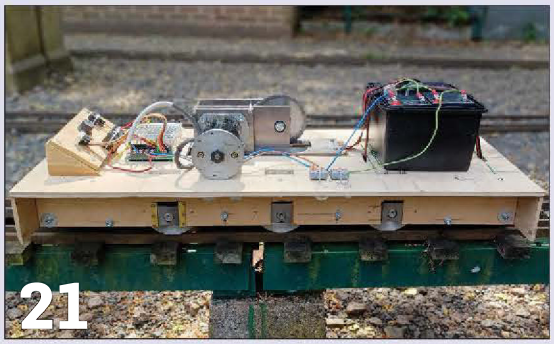

06 6-INCH FODEN KIT BUILD – CHALLENGES
by Peter Malim OBE

10 METAL FORMING TWO WAYS - CNC & 3D
by Nick Webb

14 MELTON MOWBRAY SME TRACK EXTENSION
by John Arrowsmith

18 HARRY'S GAME – SPRING HAS SPRUNG
by Harry Billmore

21 SUB500 – BUDGET ELECTRIC LOCO BUILD
by Rich Wightman & Julian Harrison

32 IMPROVED SCHOOLS - THE CYLINDERS
by Nick Feast

34 7¼-INCH GAUGE RIDE-ON TENDER PROJECT
by Peter & Matthew Kenington

38 LETTERS/REVIEWS

39 GENERAL NEWS

40 CLUB/TRACK NEWS
Busy times at the tracks

44 DIARY
Latest events and meetings

FRONT COVER

When the Melton Mowbray & District SME opened its new track extension recently it wasn't all about rail locos as John Arrowsmith found out. Here McLaren and Burrell road engines owned respectively by Chris Smith and Graham Wissum tick over on the patio in front of the clubhouse. John's report of the event starts on page 14.

EDITORIAL

Trying not to have a busman's holiday...

Welcome to the July edition of EIM as we steam into high summer – over the past few days as I write this it's certainly seemed that way, lots of bright sunlight and warm temepratures. I've had a Mazda MX-5 roadster on test in my 'other job' as a motoring journalist and the weather has certainly provided plenty of excuse to get the roof down and go out visiting railways...

This month your Editor pens these words feeling duly refreshed, having as I previewed last month just returned from a week's holiday at the very top of Norfolk – typically it rained every day, but only for a little while each day and it did not stop Mrs C and I having a fine time.

Now while any Charman holiday involves a certain amount of rail (Rosemary is a very understanding wife...), I was determined not to overdo it – a trip to catch up with Andrew Barnes who runs the 15-inch gauge Bure Valley Railway was certainly on the agenda, as was visiting the 10¼-inch gauge Wells & Walsingham line, purely because I had never previously seen this novel line. While diesel operated on the day we visited (it had been running steam when we passed by earlier in the week on Coronation Day, but as that was also our wedding anniversary...) I enjoyed an interesting time viewing the Garratt loco in the shed and talking coal challenges with the operaitons manager.

So that was enough miniature engineering for a week, but only just! On the first day, we followed our sat nav and the instructions to find our holiday cottage into a tiny village near Holt, turned into the long driveway down to the cottage's location in a former hall and I was immediately distrcted by a house next door to the entrance which had a compact and very fine 7¼-inch gauge line encircling it... The holiday cottage owner told me her neighbour was an enthusiast and suggested I should knock on the door but I thought that might be pushing things a bit while on my wedding anniversary holiday...

So if you are a reader who owns your own neat little garden line in a small village in Norfolk, you nearly had the editor drop in for tea!

Andrew Charman – Editor

The August issue of **Engineering in Miniature** publishes on 20th July.

Editor: Andrew Charman Technical Editor: Harry Billmore
Email: andrew.charman@warnersgroup.co.uk Tel: 01938 810592
Editorial address: 12 Maes Gwyn, Llanfair Caereinion, Powys, SY21 0BD
Web: www.engineeringinminiature.co.uk
Facebook: www.facebook.com/engineeringinminiature
Subscriptions: www.world-of-railways.co.uk/Store/Subscriptions/engineering-in-miniature

FOR SUBSCRIPTION QUERIES call 01778 392465 – the editor does not handle subscriptions.

Publisher: Steve Cole
Email: stevec@warnersgroup.co.uk
Design & Production: Andrew Charman

Multimedia sales manager: Sarah Jarman
Tel: 01778 392055
Email: Sarah.jarman@warnersgroup.co.uk
Advertising design: Amie Carter
Email: amiec@warnersgroup.co.uk
Ad production: Allison Mould
Tel: 01778 395002
Email: allison.mould@warnersgroup.co.uk
Marketing manager: Carly Dadge
Tel: 01778 391440
Email: carlyd@warnersgroup.co.uk

Published monthly by Warners Group Publications Plc,
The Maltings, West Street, Bourne, Lincolnshire PE10 9PH.

Articles: The Editor is pleased to consider contributions for publication in Engineering in Miniature. Please contact us to discuss your work.

© **Publishers & Contributors**
All rights reserved. No part of this publication may be reproduced, stored in a retrieval system, or transmitted in any form or by any means electronic, mechanical, photocopying, recording or otherwise, without the prior permission of the Publishers. This periodical is sold subject to the following conditions; that it shall not without the written consent of the publishers be lent, resold, hired out, or otherwise disposed of by way of trade at a price in excess of the special recommended maximum price, and that it shall not be lent, resold, hired out, or otherwise disposed of in mutilated condition, or in any unauthorised cover by way of trade, or affixed to as part of any publication or advertising, literary or pictorial whatsoever.

Whilst every care is taken to avoid mistakes in the content of this magazine the publishers cannot be held liable for any errors however arising. The reader, in pursuing construction and operation of any product, should exercise great care at all times and must accept that safety is their responsibility.

Engineering in Miniature – ISSN 0955 7644

Amadeal Ltd.
Machine Tools

Call: 0208 558 4615
WWW.AMADEAL.CO.UK

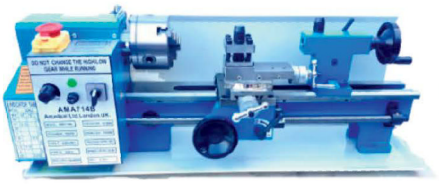

AMA714B Mini lathe
Brushless Motor

SPECIFICATION:
Distance between centers: 350mm
Taper of spindle bore: MT3
Spindle bore: 20mm
Number of spindle speeds: Variable
Range of spindle speeds: 100-2250mm
Weight: 43Kg

Price: £694

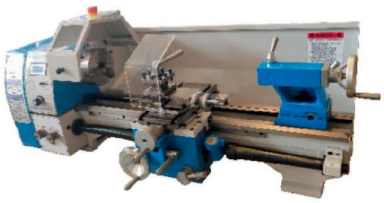

AMABL250Fx750

SPECIFICATION:
Distance between centers: 750mm
Taper of spindle bore: MT4
Spindle bore: 26mm
Number of spindle speeds: Variable
Range of spindle speeds: 50~2500rpm
Weight: 140Kg

Price: £1,904
W 2 Axis DRO - Price: £2,280

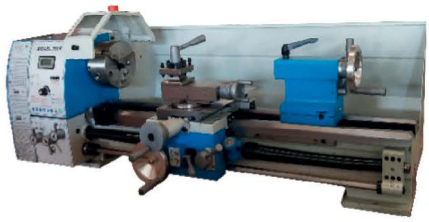

AMABL290VF Bench Lathe (11x27) - power cross feed - BRUSHLESS MOTOR

SPECIFICATION:

Distance between centers: 700mm
Taper of spindle bore: MT5
Taper of tailstock quill: MT3
Motor: 1.5kw
Weight: 230Kg

Price: £2,782
W 2 Axis DRO – Price: £3,150

AMAVM25LV

SPECIFICATION:
Model No: AMAVM25LV (MT3) / (R8)
Max. face milling capacity: 63mm
Table size: 700×180mm
T-slot size: 12mm
Weight: 120Kg

Price: £1,431.00
W AXIS POWERFEED - Price: £1,659
W DRO – Price: £1,921
W DRO + PF - Price: £2,210

E3 Mill R8 Metric Brushless Motor

SPECIFICATION:
Max. drilling capacity: 32mm
Max. end milling capacity: 20 mm
Max. face milling capacity: 76mm
Motor: Input- 1.5KW
Packing size: 1050x740x1150mm
Net weight: 240kg

Price: £2,560.00

AMAVM32LV

SPECIFICATION:
Model No: AMAVM32LV (MT3) / (R8)
Max. face milling capacity: 76mm
Table size: 840×210mm
T-slot size: 14mm
Weight: 240Kg

Price: £2,100.00
W DRO – Price: £2,537
W DRO + PF - Price: £2,948

See website for more details of these machines and many other products including a large range of accessories that we stock

Prices Inc VAT & Free Delivery to Most Mainland UK Postcodes

www.amadeal.co.uk

We Accept

|Call: 0208 558 4615 |Email: info@amadeal.co.uk|

SILVER CREST
models

MARKET LEADER IN LARGE SCALE, READY-TO-RUN, LIVE STEAM

5" GAUGE A3 CLASS "FLYING SCOTSMAN"

THE MOST FAMOUS LOCOMOTIVE IN THE WORLD

"FLYING SCOTSMAN" CENTENARY SPECIAL

NOW ONLY £13,995.00 + p&p.
SAVE £1,000.00!

An Official Limited Edition Of 50 Models

Having concluded a licence agreement with SCMG Enterprises we are delighted to offer our A3 Class "Flying Scotsman" as an official production in commemoration of the locomotive's 100th anniversary.

Each model will be issued with a numbered Certificate of Authenticity attesting to its status as one of only 50 models in this strictly limited worldwide production.

Also available with double chimney and smoke deflectors, in the livery of your choice.

This professionally built coal fired, live steam, locomotive must be amongst the most prestigious commemoratives available. It is a model designed to stand the test of time, a family heirloom to be passed on through the generations. Fine scale working models can represent a great investment, keeping their value while so many other possessions depreciate. This is an opportunity not to be missed for the serious "Flying Scotsman" enthusiast.

Request your free brochure today

Request your free brochure today by e-mail, telephone, or by returning the coupon opposite.

Telephone: **01327 705 259**

E-mail: **info@silvercrestmodels.co.uk**

Find more information at
www.silvercrestmodels.co.uk

The Model

This coal-fired model features three cylinders and outside Walschaerts valve gear. The copper boiler is silver soldered and hydraulically tested to twice working pressure, CE and UKCA marked. The body casing is assembled using etched brass sheet.

This development of this model has been supervised by our award winning professional engineer Mike Pavie and the batch is being built by the same manufacturer who supplied our much acclaimed Coronation Class locomotive.

The A3 Class model is supplied fully built and ready-to-run, painted and lined in either LNER green, or BR lined green. We will supply your choice of nameplate. As testament to our confidence in the quality of this model each locomotive will be supplied with a full 12 months warranty. All models will be subject to a pre-delivery inspection and boiler test. Our after sales service is considered by customers to be second-to-none.

Summary Specification

- Coal-fired live steam
- Silver soldered copper boiler
- Reverser
- Working drain cocks
- Stainless steel motion
- Safety valves
- 3 cylinders
- Boiler feed by axle pump, injector, hand pump
- Bronze cylinders with stainless steel pistons and valves
- Sprung axle boxes with needle roller bearings
- Piston valves
- Mechanical lubricator
- Outside Walschaerts valve gear
- Multi-element superheater
- Etched brass bodywork
- Choice of liveries
- Choice of nameplate
- Fully painted and lined
- Ready-to-run

Approx Dimensions:

- Length 74"
  Width 9.5"
  Height 14"
- Weight 105 kg

Limited Availability

We will manufacture a strictly limited worldwide edition of 50 A3 Class models. Each will be supplied with numbered and signed Certificate of Authenticity attesting to its status as an official Centenary Commemorative.

Free p&p worth £195.00 if you order within 28 days.

We will offer free p&p on any order placed within 28 days as a thank you for your early order.

Delivery and Payment

For orders taken now build completion is scheduled for September/October 2023. You can reserve your model now for a deposit of just £1,995.00. We will request an interim payment of £5,000.00 in July as the build of your model progresses, a further stage payment of £5,000.00 in August and a final payment of £2,000.00 on build completion.

Produced under licence from SCMG Enterprises Ltd. Flying Scotsman trade marks ® SCMG and designs © SCMG. Flying Scotsman is a National Railway Museum locomotive. Every purchase supports the museum. www.railwaymuseum.org.uk

FREE BROCHURE REQUEST FORM

Please send, without obligation, my free 5" gauge "A3 Class" brochure.

Name: _____

Address: _____

_____

_____ Post Code: _____

Please send to: Silver Crest Models Limited
18 Cottesbrooke Park, Heartlands Business Park,
Daventry, Northamptonshire NN11 8YL

EIM

Company registered number 7425348

Building a 6-inch Foden C Type wagon

This month Peter's occasional series focuses on fitting the motion and gears to his Steam Traction World kit, along with starting the bodywork and some significant setbacks.

BY **PETER MALIM OBE** Part Four of an occasional series

My plan for the build of my Foden steam wagon was to concentrate on getting the mechanical side completed and running before starting on the bodywork. This was partly to be in a position to play sooner with an operational vehicle albeit as a skeleton.

The primary reason, however, was because access to the mechanics is considerably more difficult with the bodywork fitted. I had therefore hoped to introduce this part of the series with news that the Foden has successfully run on air, subsequently been steamed and gained a steam certificate. Unfortunately none of this has happened due to a number of significant setbacks described below.

In order to maintain build momentum whilst waiting for various parts to be returned from Steam Traction World (STW) I have been assembling, varnishing and painting various parts of the bodywork. The main area has been the cab which is a mixture of wood and metal, though I have also started to assemble the load bed and begun to paint the mudguards and their mounting brackets.

"A cause of much of the delay has been the alignment of the con rods with the crankshaft big-end bearings..."

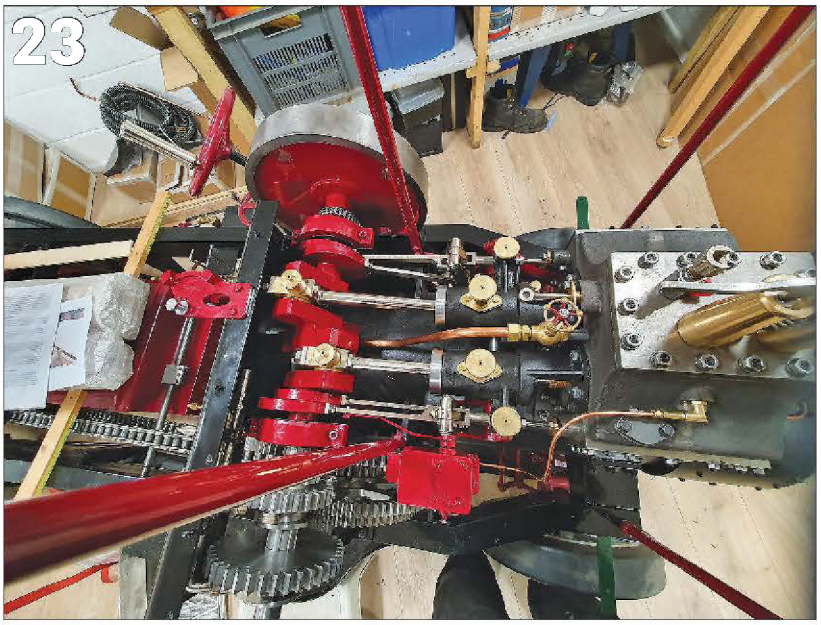

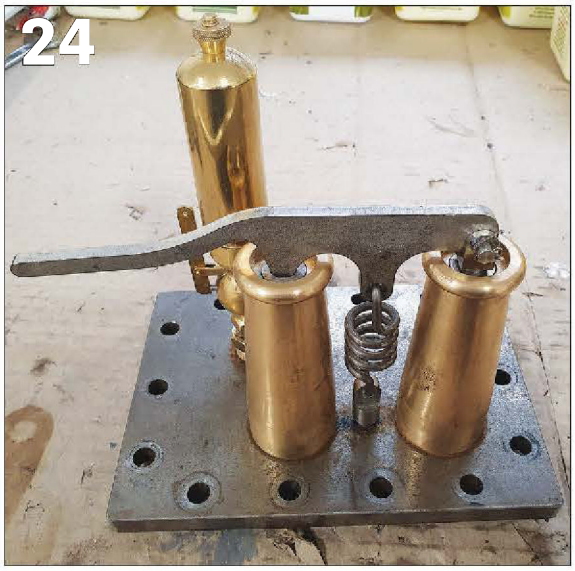

Mechanical quality

I have had a considerable number of problems with items supplied by STW. A major problem and cause of much of the delay has been the alignment of the con rods with the crankshaft big-end bearings. The engine is a Double Crank Compound so there are two con rods which both have to align with their relevant crankshaft journals. When I trial installed the crankshaft, the low-pressure con rod aligned fine, but the high-pressure one was over 3mm offset to the journal.

I took a number of measurements which I sent to STW – the company could not understand what the problem was and apparently this problem has not been seen before. After some correspondence I suggested that I took the Foden to them to sort out.

However before doing this I decided as a last resort to disassemble the high-pressure crosshead and con rod and re-assemble it with the con rod rotated through 180 degrees in relation to the crosshead. This brought the con rod within 1mm of being centred on the con rod so the gudgeon pin and/or the con rod little end appear to not be precisely square to the trunk guide. With a small amount of material removed from one side of the big end bearing, the assembly is now acceptable and moves freely. An overview of the motion is shown in Photo 23.

Having sorted out this problem, I was ready to complete the mechanical assembly and prepare for running on air. I have a small hobby compressor which produces 110psi but with a relatively low volume capability.

There is a plate on the top of the Foden's cylinder which covers the regulator steam chamber. This plate has the safety valves fitted and also a threaded hole for the whistle assembly (Photo 24). This is a convenient point to attach an air line as it is directly connected to the boiler enabling the whole assembly to be pressurised.

The first attempt at pressurising the assembly showed up the inevitable small leaks from various joints that could easily be nipped up. However more serious issues were also apparent. There are two boiler clacks, one for the injector feed and the other

for the crankshaft-driven mechanical pump. Both of these were leaking badly. In addition both safety valves were also not sealing.

This volume of leakage meant that there was only a small window to open the regulator before pressure was lost. In that short time the engine did run and initial indications are that the valve timing is pretty good – time will tell whether any slight adjustments will need to be made.

The boiler clacks rely on a stainless-steel ball sitting on a machined seat, held in place by the pressure in the boiler. I disassembled them and decided that the seats could be better. I have a model engineer friend who has a machine shop so we re-machined the seats and I invested in new ball bearings. With advice from another experienced model engineer, I also installed stainless-steel springs to apply light pressure to hold the balls in place.

This did not solve the problem, however, with the clacks still leaking air albeit at a reduced rate. Not being able to come up with any other fix to this issue, I invested in and fitted clacks from Heritage Steam Supplies which are miniaturised versions of full-size shuttle clacks. The mechanical pump feed clack can be seen fitted to the boiler in Photo 25. In a subsequent brief pressure test they sealed perfectly.

The situation with the leaking safety valves was far more worrying. As can be seen from photo 24, the two valves have a common operating lever and spring with the pressure relief being adjusted by a screw thread on the spring mounting. The valves are supplied by STW as an assembly, factory set to open at the maximum working pressure of 200psi.

As the valves had been tested on a rig to prove they open at 200psi, it seems odd that it wasn't noticed that they were not sealing. I contacted STW and was asked to return the assembly for re-work. I recently received the assembly back and re-installed it on the top of the cylinder block.

Regrettably the leaks were just as bad as before, so I am at a loss as to what was done to them and why the leaks were again not noticed under test. I have contacted STW again and spoke to the owner to express my irritation with the failure to sort the problem, causing yet another delay to my being able to test steam the engine. I await a resolution as I write this.

Sheet metal components

I have had widespread difficulties with the various sheet metal components. The mudguards are rolled sheet metal. The front mudguards were supplied in the first batch of kits, however they would get in the way if fitted when work was still ongoing on the motion so I had put them to one side until recently.

When I came to test fit them it became clear that they were rear, not front, ones with the difference being in the mounting holes. It appears they had been mis-labelled in the factory. STW sent front ones and I retained the rear ones. However the front ones supplied were not the correct shape and I do not have access to bending rollers, so they had to be returned to STW to be rolled to the correct shape.

The cab side sheets are rolled sheet metal, with a double curve. There is a shaped angle-iron strip that runs along the top and the bottom is attached to the cab floor. Neither of these sheets was rolled to the correct shape, with one being further out than the other – Photo 26 shows the mismatch between the angle iron and the sheet. These therefore had to also be returned to STW for rework.

There are three sheet metal elements that make up the chain guard in the cab, and there is an assembly that covers the cylinder block and interfaces with the cab sides. All four of these pieces were rusty and looked as though they had been stored in a damp environment – see Photo 27. These too had to be ▶

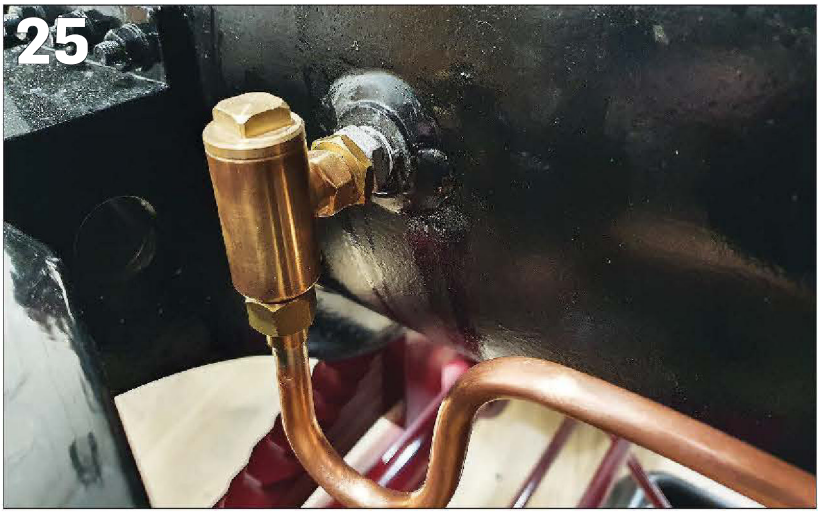

PHOTO 23: Assembly of motion proved more challenging than expected.

PHOTO 24: Plate housing safety valves and whistle.

PHOTO 25: Mechanical pump feed clack fitted to boiler.

PHOTO 26: Cab sides and edge strip displayed different views on curvature.

PHOTO 27: Opening packs for bodywork was initially disappointing.

All photos by the author

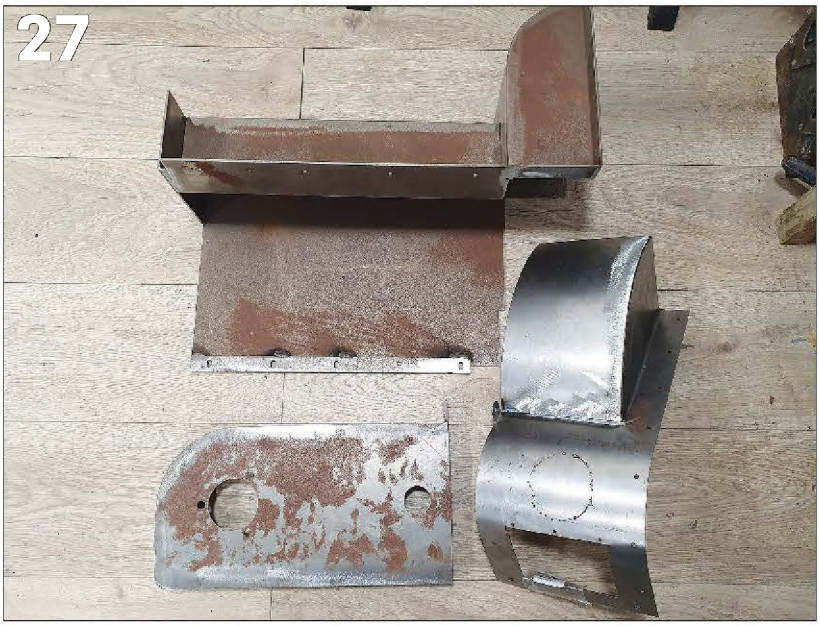

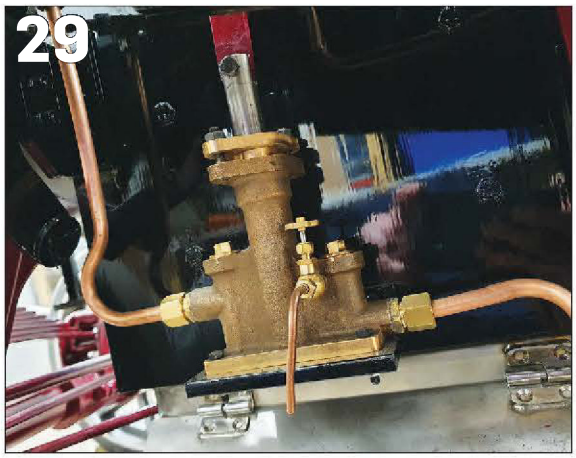

returned to STW to be cleaned up.

When I tried to fit the rear chain guard, however, I found that it was substantially the wrong shape and would not fit. I had to cut it into three separate pieces, modify them and re-weld the assembly back – fortunately I can weld and have the relevant facilities.

More issues

The grate is made up of two support brackets mounted on four pillars attached to the ashpan with removable grate bars, so they can be replaced when they burn through in due course. The bars supplied did not fit as they were too long though they had the correct part number having been mis-labelled in the factory. STW sent replacement bars which did fit, but I did not receive a full set so two more had to be sent.

The roof is supported on four pillars and by the rear cab assemblies. When I came to fit the roof I discovered that the mounting brackets on the two central pillars had both been welded on at different and wrong angles, so I had to grind them off and re-weld them to the correct angle and height. Photo 28 shows the extent of the error.

There are doors between the rear and front cab sections. These doors are hinged from an angle iron fitted to the front section which has a rebate and bolt holes to take the hinges. There are two holes, but the hinges supplied had three holes, none of which lined up. This is despite the hinges having the correct part number on the package. STW has since supplied replacements with the required two holes.

PHOTO 28: Mismatch between cab support and roof had to be rewelded.

PHOTO 29: Water pump after fitting.

PHOTO 30: Second water input method, the injection.

PHOTO 31: Front water tank ready for fitting.

PHOTO 32: Return spring keeps handbrake cable taut.

PHOTO 33: Gearing all fitted in place.

The lorry is fitted with an operational water lifter and hose. The steam to operate the lifter is supplied by a pipe from a valve on the boiler manifold which is in two pieces to enable fitting. One of these pipes was too long so had to be returned to STW to be shortened as the connections are flared with a special tool.

Progress made

Having described a number of frustrations, I will now cover the work that I have been able to get on with. Having sorted out the crankshaft alignment I fitted the flywheel. This has to be done with the crankshaft off the horn guides as the steering mechanism is in the way of fitting it in situ. I also fitted the water pump drive sprocket onto the crankshaft.

The pump, as shown in Photo 29, operates off an eccentric that is driven by a duplex chain from the crankshaft. This provides one means of getting water into the boiler, the other being an injector (Photo 30). The pump operates continuously and a valve is provided to return the water to the tank when not required to feed into the boiler.

Having refitted the crankshaft I assembled the motion which I had previously test installed and nickel plated. With this all in place it was possible to set up the valves.

The high- and low-pressure cylinders have their own valves, so it is important that these are set up correctly to ensure the high-pressure exhaust steam enters the low-pressure cylinder at the correct moment. The timing is primarily set by the eccentrics but the slide valves can be moved on the operating shafts to ensure correct opening and closing events. Having followed the instructions the engine sounded right when I briefly ran it on air.

I've also installed all the lubrication pots and fitted them with trimmings which seem to be effective. The cylinder oil lubricator is driven off the high-pressure outer eccentric drive. Others have had problems with this lubricator and many have fitted Foster ratchet ones. Mine appears to be operating but it hasn't had to work against boiler pressure yet, so time will tell.

As described in the previous episode I have now lined both water tanks with a protective coating. As predicted this was not straightforward as the tanks are large and unwieldy. However the result looks really good. I have painted and installed the tanks and their associated pipework – Photo 31 shows the front tank before fitting. I have found that with large areas like this an effective painting technique is to use a small gloss roller to get an even coat on quickly and then lay it off with a large brush to produce the desired finish.

This tank has a large recess at the front to for the driver's legs and feet. There are drum brakes in the rear wheels which are operated by a foot pedal in this recess. There are springs

on the brake pads but it is clear that a return spring will be required on the pedal in addition to ensure the brakes disengage. There is also a handbrake mechanism on the rear axle and I have made a simple modification to this to fit a return spring to ensure the brake material doesn't rub and the cable remains taut when the handbrake is released (Photo 32).

The crankshaft also carries the three primary gears and the change mechanism which slides one of three gears to engage with the gears on the second shaft as can be seen in Photo 33. The levers that engage one of the three gears have an interlock to avoid engaging more than one gear at a time, visible in Photo 17 which was in the previous part of the series.

The assembly and alignment of the second shaft looked as though it would be tricky but in the event it went together with no issues. The drive is taken from the second shaft to the sprocket on the rear axle differential by a very substantial – and heavy – chain. The drive sprocket is visible between the second shaft gears in the photo.

The chain tension is adjusted by moving the rear axle backwards or forwards by means of threaded radius rods. With the adjustment at full stretch the chain was still too slack so I had to take it off and remove a link which then enabled the chain to be correctly adjusted.

Building the bodywork

The first part of the bodywork that I tackled was the roof. I am the first to admit that my carpentry skills tend to the rustic end of the spectrum so the compound curves of the roof appeared somewhat daunting.

The roof kit is supplied with a jig to hold the ribs in the correct positions and I fitted this to the temporary stands that I had made for assembly of the chassis.

Photo 34 shows the ribs on the jig with the edge trims being fitted prior to installing the roof sheets, which are strips of 6mm plywood. These are glued and nailed to the ribs and glued to each other, the ply being flexible enough to bend to the required shape. In the event the use of the jig meant that the roof assembly proved a fairly straightforward process.

The underneath is visible so I decided to make a feature of this by staining alternate strips. Once the roof was assembled, I varnished the underside as shown in Photo 35. I have to say I am very pleased with the overall effect. The top side of the roof will be covered in calico and painted.

Next steps

The mechanical part of my Foden build is effectively complete, with the exception of the safety valves. Once that issue is resolved I am ready to start compressed-air testing, which I will do at the local steam railway where I volunteer as they have a substantial workshop compressor which will keep up with the demand for air and operates at a higher pressure than my home system.

Once I have ironed out any hopefully minor problems this shows up, I will be in a position to finally light a fire in the grate and gradually raise steam and then it will be mobile. At this point I will also be able to get a Steam Certificate.

In the meantime I am continuing to focus on fitting the bodywork. I will leave permanently fitting the roof to the last as it does restrict easy access to the motion and cylinder block. The rear load deck is a substantial assembly and I have bought the optional kit of drop-down sides and tailgate. This has a lot of bits of wood and the metal bracketry to operate it, so this will take some time and care to assemble.

I have unpacked the kits for this and the American White Oak looks to be high quality and nicely machined. I intend to varnish the wood parts and paint the metal hinges and such the same green as the cab. The cab sides and doors will be green and I intend to get a professional signwriter to do the lining and lettering.

The final step, having completed the build and got the Steam Certificate, will be to tackle the minefield of dealing with the DVLA to get the lorry registered for use on the road. The next part of the series will describe all of this. EIM

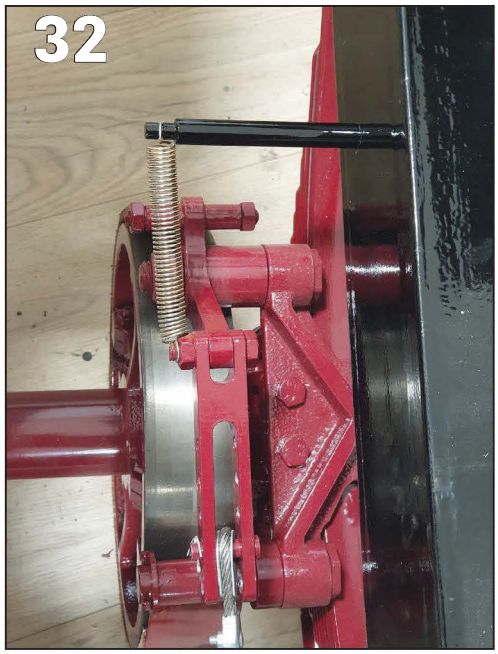

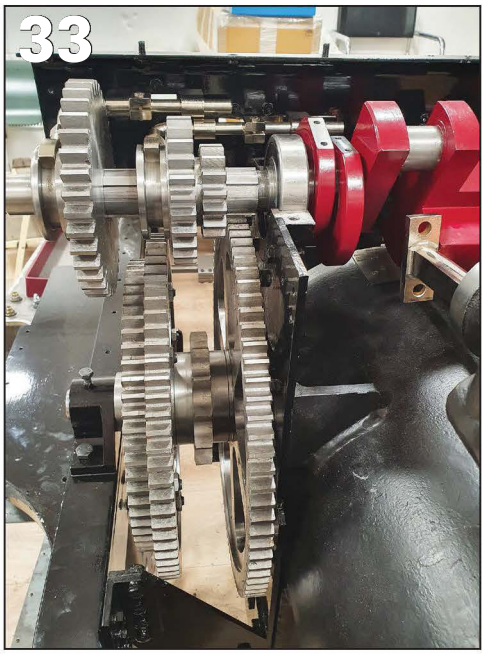

PHOTO 34: Jig helped ensured roof build was not as scary as it looked.

PHOTO 35: Underside of root after varnish was applied.

■ The first three parts of this series appeared in the June and October 2022, and the February 2023 editions of EIM – you can download digital back issues or order printed copies from www.world-of-railways.co.uk/store/back-issues/engineering-in-miniature

18+

WHAT IS AVAXHOME?

AVAXHOME-

the biggest Internet portal, providing you various content: brand new books, trending movies, fresh magazines, hot games, recent software, latest music releases.

Unlimited satisfaction one low price
Cheap constant access to piping hot media
Protect your downloadings from Big brother
Safer, than torrent-trackers

18 years of seamless operation and our users' satisfaction

All languages
Brand new content
One site

AVXLIVE.ICU

AvaxHome - Your End Place

We have everything for all of your needs. Just open https://avxlive.icu

Metal forming two ways

Nick describes how he uses CAD and 3D printing to help with the production of complex shapes in copper for his models.

BY **NICK WEBB**

Oil had been collecting in the mud-hole of my 4½-inch scale Foden wagon, and I wanted to stop that happening, as that oil was likely to get into the boiler when removing the door, and no one wants oil in their boiler, it can lead to all sorts of problems.

After a little investigation I found that there appeared to be three sources of this oil:

1) The trunk guides
2) Overflow/spillage from the crosshead lubricators running down the sides of the trunk guides
3) Oil being flung from the crankshaft/big ends.

I decided on a two-part solution. To deal with the drips from the trunk guides and flingage from the crankshaft, I wanted shields/guards, which would be attached to, but easily removable from, the trunk guides themselves, directing the oil onto the boiler shell, from where it would drain away onto the ground.

For the oiler spillage a 'drip tray' on each would serve to collect and drain the oil onto the guards. Copper was the chosen material to make these from, for the ease with which it can be formed when annealed.

Computer aid

When making things I almost always model them in CAD first. This makes producing working drawings easy, and, when working from purchased plans, the process of building the model also serves to find most of the problems/inconsistencies that might exist in those drawings.

I had done this for the wagon, so already had a model of the engine to hand (Figure 1), A couple of sketches (Figure 2), and an extrude and a loft later, I had a model of the guard (Figure 3).

I decided to make the guards by pressing them, so I would need a two-part mould for this. The lower part of the mould would be a block, aligned with the overall bounds of the guard, with a suitable cavity.

The first step was to make a sketch outlining the block, with the cross-section of the guard included (Figure 4) which was then extruded (Figure 5) giving the basic block.

The next step was to split that block using the model of the guard as the splitting tool, and delete the bits that weren't needed (Figure 6).

The upper mould was created from a sketch based on the upper block (Figure 7), which was extruded (Figure 8). The lower block was then subtracted from this one (Figure 9), and then the faces of this block which met with the lower one were pushed back by 1.2mm to allow for the 1mm copper sheet I was going to use (Figure 10).

I decided that there wasn't much point in trying to fold the edges of the copper out horizontally, so removed the sides of the block (Figure 11). As the artifacts around the left-hand end were small, and wouldn't make any difference to the end product, I decided not to worry about them.

The two blocks were then 3D printed in PLA, at 0.3mm layer height, ▶

FIGURE 1

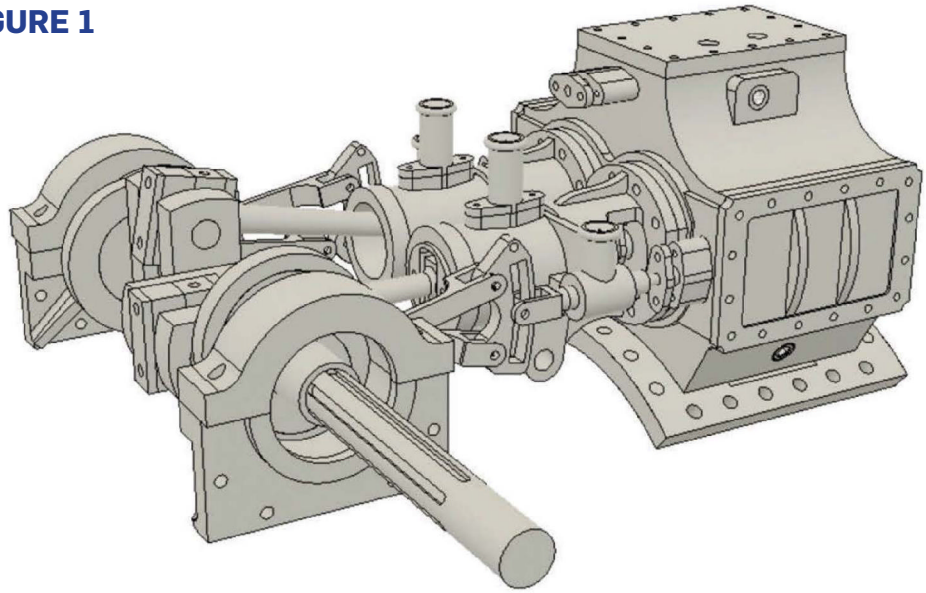

FIGURE 1: Engine of Foden steam wagon drawn in CAD.

FIGURE 2: CAD sketch of proposed shield.

FIGURE 3: Extruding sketch design in CAD

FIGURE 4-11: Stages in designing shield formers – see text for details.

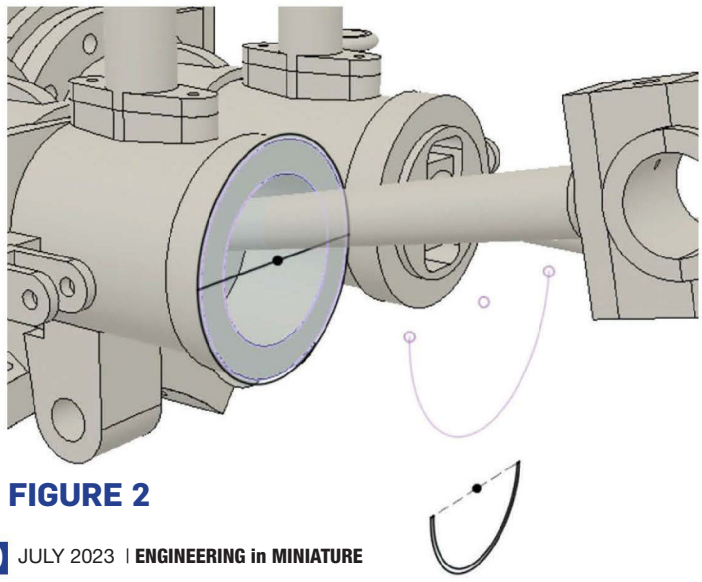

FIGURE 2

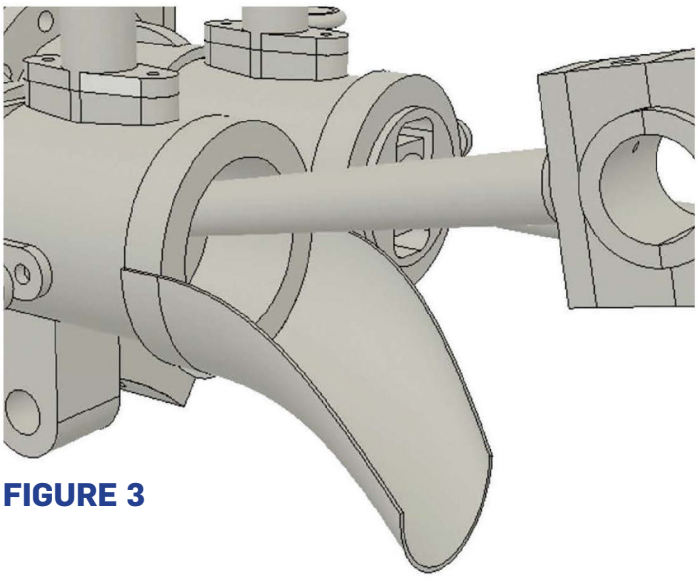

FIGURE 3

FIGURE 4

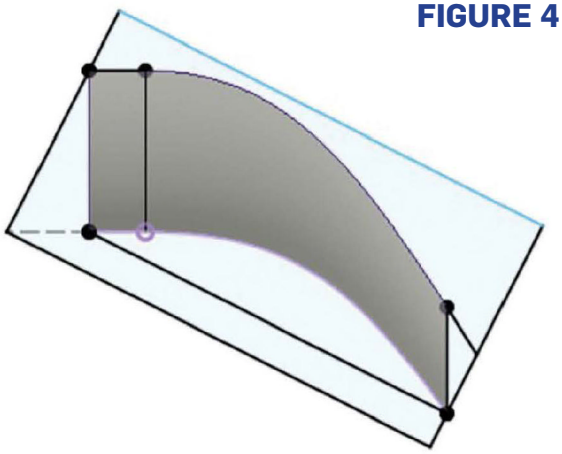

FIGURE 5

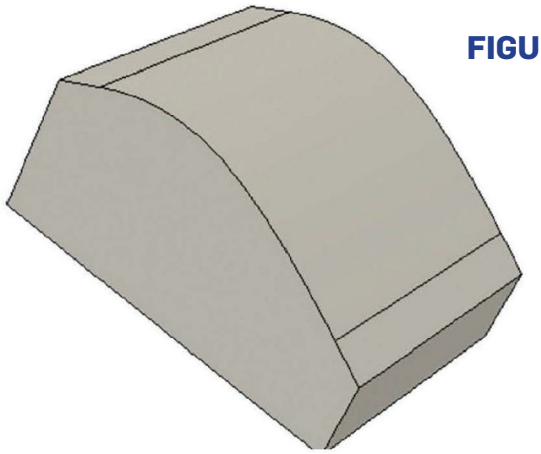

FIGURE 6

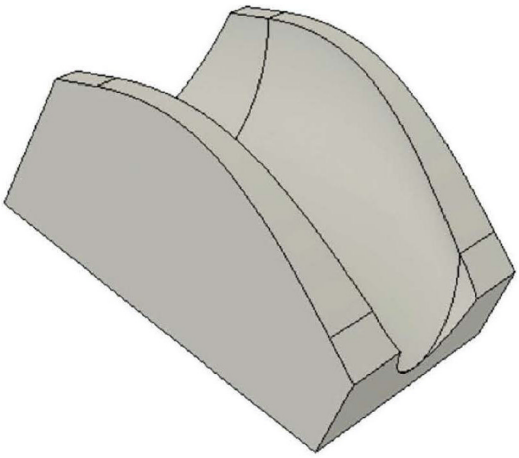

FIGURE 7

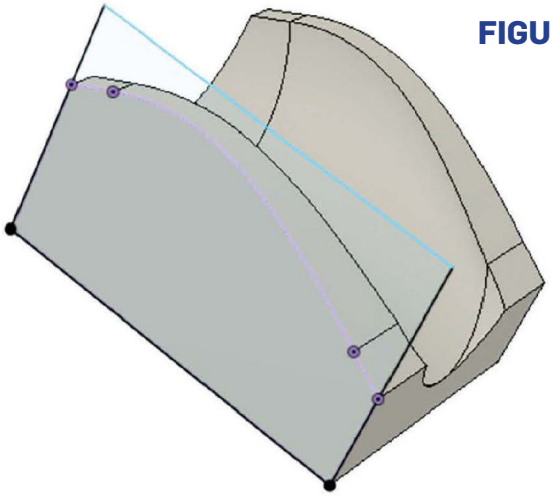

FIGURE 8

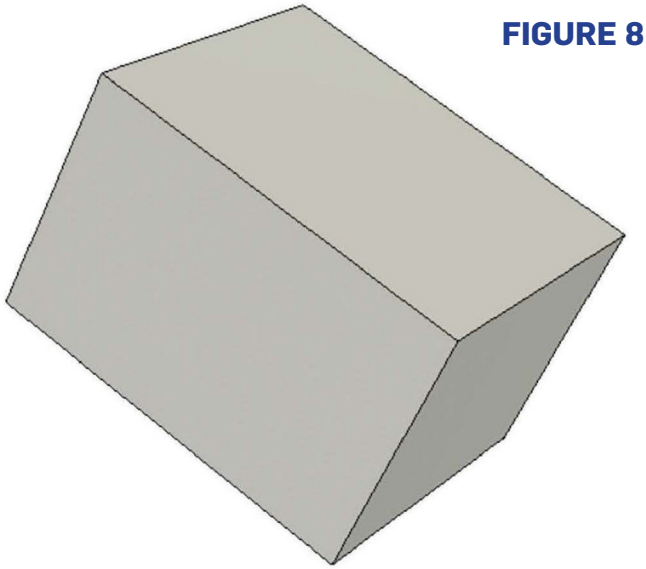

FIGURE 9

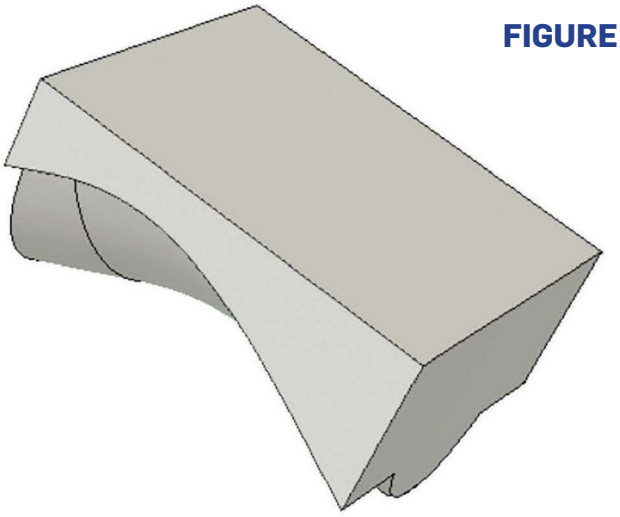

FIGURE 10

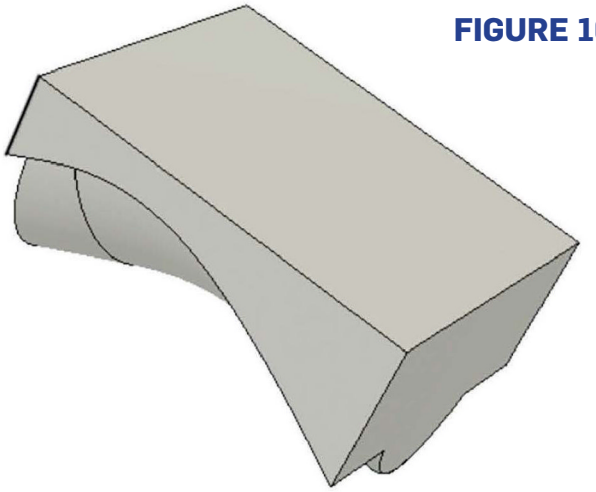

FIGURE 11

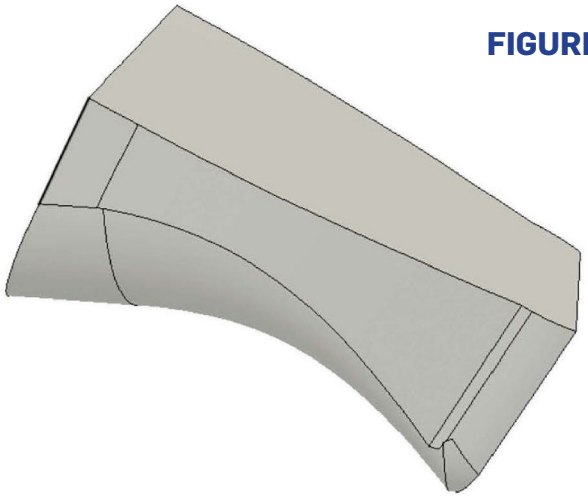

and with 10 walls and 50 per cent infill for strength (Photo 1).

Photo 2 shows the first blank after initial pressing. This revealed that I had made the blank too small, and the successful ones, after pressing (in two stages, with annealing before each), trimming, and polishing, are shown in Photo 3. The guards, fitted using boiler-band style clamps are shown in Photo 4.

Drip trays

The drip trays, having vertical sides, are better made by hammering over a single form. A sketch of the plan view (Figure 12), followed by a couple of extrudes formed the main part (Figure 13).

A second sketch (Figure 14) followed by a loft allowed the spout to be formed (Figure 15).

For the former itself the procedure was pretty much as before; use a sketch, derived from the drip tray, to extrude a block that extends through the tray (Figure 16); use the drip tray to split the former, and delete the parts we don't want (Figure 17).

I then added holes to act as drill guides for the holes that would be needed for mounting and such in the final product (Figure 18).

I printed two copies of the former, one a mirror image of the other, using the same settings as above. I also made a template for marking out the blanks used to make the drip trays.

Hammer-forming proceeded in the usual way, and I found that around five annealings were needed to get to the finished product. The two formers, the template, a blank, and a formed tray, are shown in Photo 5.

Photo 6 shows the drip trays after trimming, deburring and a bit of polishing, and Photo 7 shows them fitted in place.

Why did I choose to make the drip trays asymmetrical I hear you ask? So that they won't drip onto the connecting rods... EIM

PHOTO 1: Shield formers after 3D printing.

PHOTO 2: Initial pressing – blank revealed to be too small.

PHOTO 3: Finished shields and formers.

PHOTO 4: Shields in position on the wagon .

FIGURE 12-18: Stages in designing drip trays in CAD – see text for details.

PHOTO 5: Two formers, template, the blank and a designed tray.

PHOTO 6: Finished pair of drip trays.

PHOTO 7: Drip trays mounted in place on wagon.

All photos and diagrams by the author

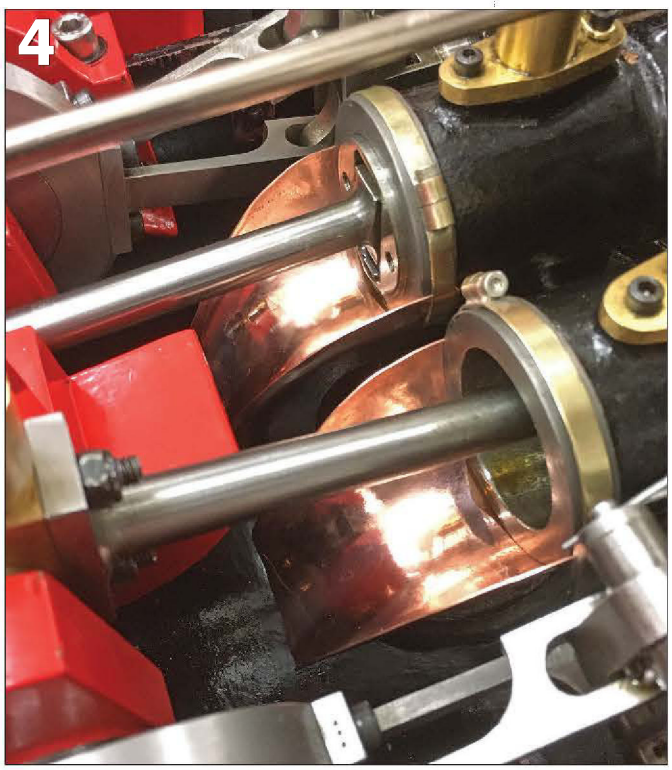

FIGURE 12

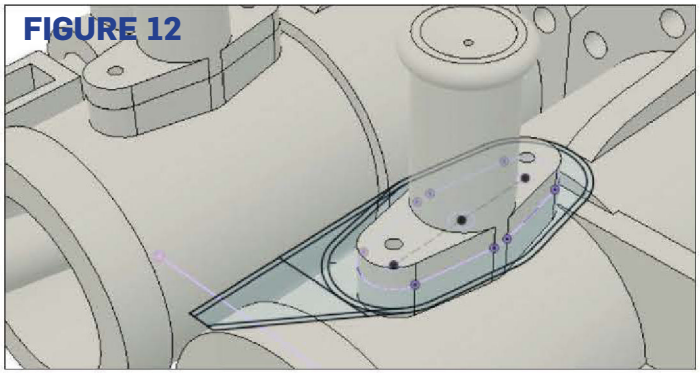

FIGURE 13

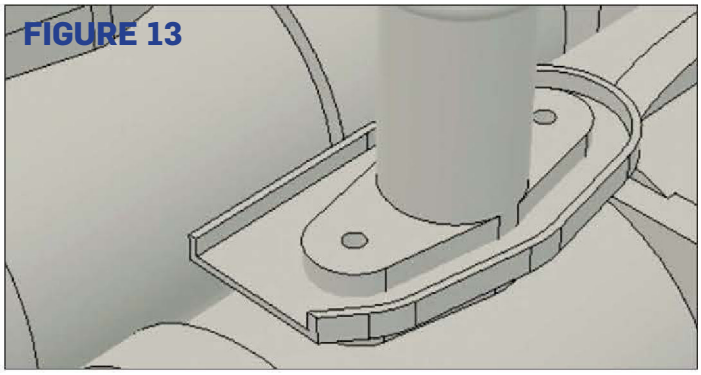

FIGURE 14

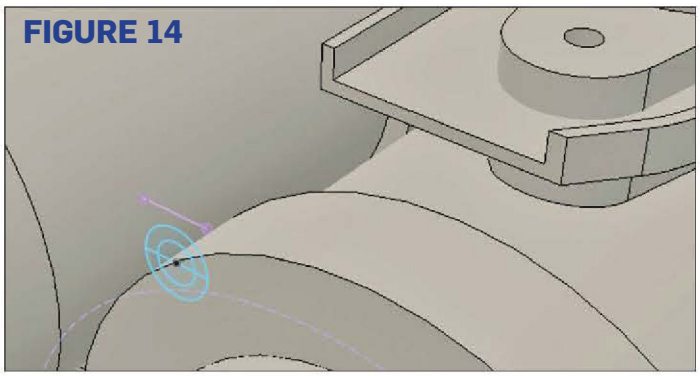

FIGURE 15

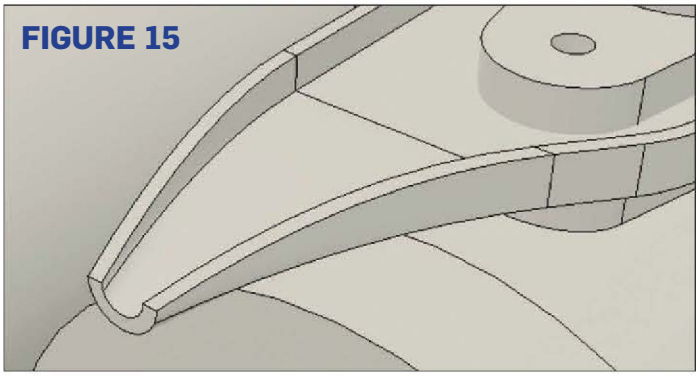

FIGURE 16

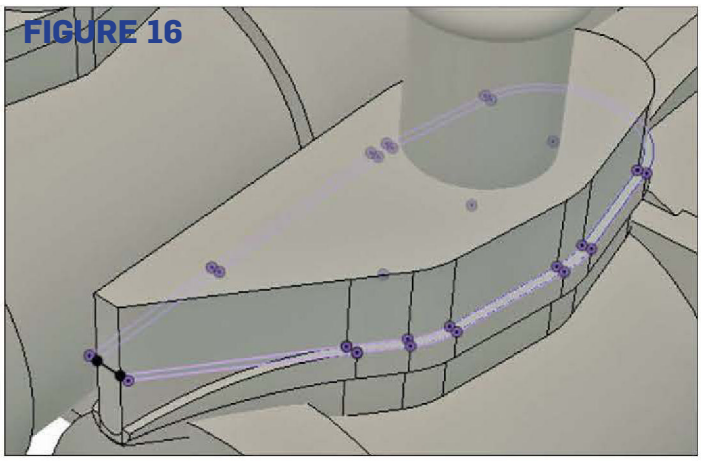

FIGURE 17

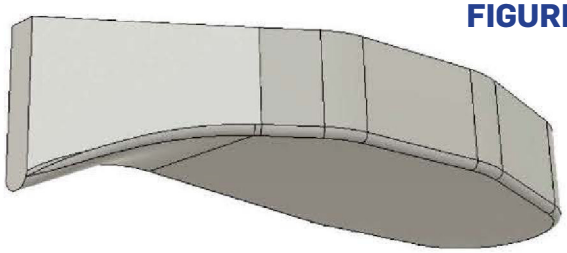

FIGURE 18

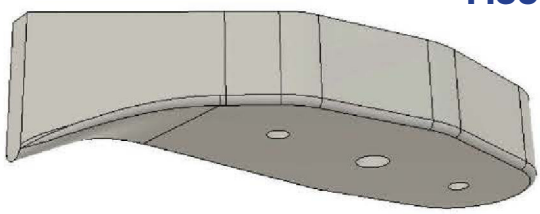

5

6

7

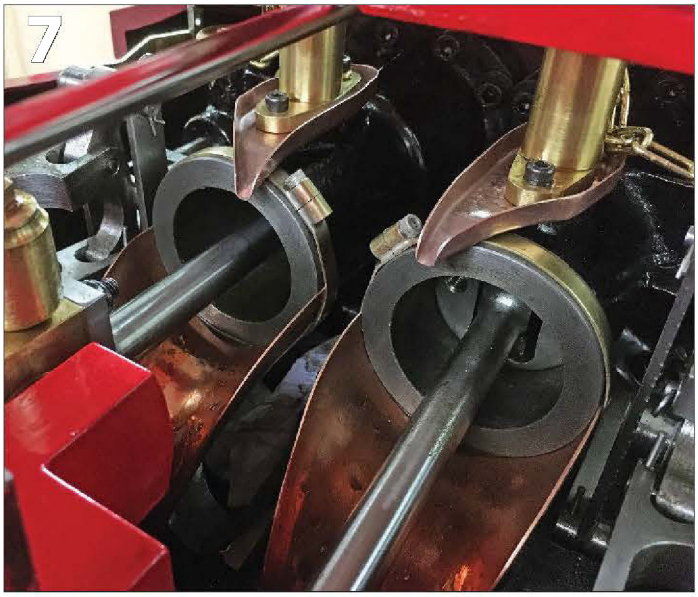

Track extension at Melton Mowbray

John attends the celebrations as the Leicestershire club officially opens its newly extended ground-level circuit.

BY **JOHN ARROWSMITH**

The well-established Melton Mowbray & District SME has been on its present site at the Whissendine Sports and Social club ground in Leicestershire for more than 40 years and like many clubs the members thought it would be a good idea to try and extend the multi-gauge ground-level track so that members and visitors could enjoy a longer run.

The original ground-level track had been officially opened in 1983 by Lady Jennifer Gretton, the President of the Society (*Lord Gretton, who died in 1989, famously built the 10¼-inch gauge Stapleford Miniature Railway around his Stapleford P:ark estate – the railway still operates today on selected days under Lady Gretton's stewardship – Ed)* . Once the idea in principle had been agreed it was then down to the planning stage and with the Whissendine site being compact and in one corner of the larger sports field, this would not be an easy task. But careful thinking and measuring indicated that it would be possible.

When the club first acquired the site the main problem was the diagonal slope across it of 23 feet. So the members knew that the ground available to them had already gone through some serious earth moving before to achieve the track they already had and therefore would not throw up any unexpected problems with unknown features and such like.

Planning started and a suitable route was found round the outside of the existing circuit. This would involve some earthworks and alterations in the station area, but was feasible. One member owned a mini digger which helped tremendously with the cutting and filling needed.

At the high end of the site a cutting was made and a good portion of trackbed was laid on a concrete block wall which necessitated a five feet high wall at the lower end. This was back filled to provide a stable base and to blend in with the existing ground levels.

ABOVE: The new extension in action – Scott Gregg has plenty of steam in his 7¼-inch gauge Black 5 as it passes the station sign.

PHOTO 1: The impressive long diamond crossing built by Dave Oliver.

PHOTO 2: The driver-operated direction signal indicates whether to bypass or to continue on another circuit.

All photos by the author

Diamond answer

Having established the basic track layout, the question was how the new track section could be joined to the existing circuit. Member David Oliver, or 'Dolly' as he was known, came up with the idea of a long diamond crossover on the far side of the circuit away from the station which would achieve this connection (Photo 1). Along with the other members of the track working party, Dave designed and built the crossing together with the main track panels and points.

Adjustments to track and points in the station enabled the complete circuit to be operational whilst maintaining all the essential clearances. To add further operating features an electro-mechanical indicator signal (Photo 2) was positioned on the approach to the station with a driver-operated route switch – this enables the driver to either go around the main circuit again or enter the main platform.

The society now enjoys a ground-level circuit of 1100ft – with sidings providing useful storage space for other locos members have almost 1200ft of useful track space along with a raised track length of about 300ft.

Sadly Dave Oliver suddenly passed

away at the end of last year but he did see the completed track and got to drive his locomotive over it, which pleased him very much. His wife and son performed the ribbon cutting to officially open the new track at the opening ceremony on 30th April

The ceremony was conducted by club Chairman John Wood and Vice President Bob Moore because Lady Gretton, who remains the society's President, could not attend due to a family commitment. The Chairman and Vice President made their speeches to the assembled crowd (Photo 3), relating the history of the club and praising the efforts of all the members who had contributed to the construction of the extension.

Sue Oliver was presented with a framed honorary membership on behalf of her husband (Photo 4) while two other founder members were also made Honorary Members of the Society, David Calvert and Neville Harvey receiving their framed certificates from Bob Moore.

After Sue Oliver had cut the ribbon a cavalcade of locos and trains proceeded around the new circuit (Photo 5) before everyone attending enjoyed a buffet lunch prepared by the ladies of the club (Photo 6).

Even before all these official proceedings took place the club track was in use with members and guests enjoying some good running time.

The steaming bays were busy with plenty of interesting conversations about the locomotives and their owners. Typical of these were two large 7¼-inch gauge engines being prepared, both superb examples of the prototypes, with histories that were remarkably similar.

Local connection

The LMS Black 5 4-6-0 (Photo 7) is now owned by Jeff and Scot Gregg who have extensively refurbished it after it was found in a very run-down state in a works in London. During the refurbishment process it was discovered that the boiler was in as-new condition and had rarely been steamed – in fact the initial boiler test

PHOTO 3: The Chairman and Vice President address the assembled members.

PHOTO 4: Sue Oliver receives a bouquet and Honorary Membership certificate from the Chairman John Wood.

PHOTO 5: The ribbon has been cut and the 7¼-inch gauge Royal Scot leaves the station with Rosie Woolston at the regulator.

PHOTO 6: The ladies of the club who prepared the excellent buffet lunch for the occasion.

PHOTO 7: Scott Gregg steams up the 7¼-inch gauge Black 5 he has rebuilt from a very poor state.

after building had been done at the Melton Mowbray club but no one at the club could remember the occasion. The work carried out on the engine looked excellent and it ran all day without fault.

Adjacent on the steaming bays was another excellent example of an un-rebuilt Royal Scot locomotive (Photo 8) and this engine had also been found in a dreadful state at an old barn. The current owner, Chris Woolston, rescued it and brought it back to pristine condition – it looked ▶

majestic in operation, displaying plenty of power with a powerful and regular exhaust beat (Photo 9).

On one of the ground-level sidings was another fine example of a BR 9F 2-10-0 which has been completed and modified from a Winson kit by club member Tony Measures (Photo 10).

PHOTO 8: The superb 7¼-inch gauge LMS 4-6-0 'Royal Engineer' now owned by Chris Woolston.

PHOTO 9: A wisp of steam as Rosie Woolston brings Royal Engineer into the station.

PHOTO 10: This 5-inch gauge BR is owned by Tony Measures.

PHOTO 11: Andy Briggs prepares his Black Hawthorne 7¼-inch gauge Saddle Tank .

PHOTO 12: Thomas Hutton on his 7¼-inch Ruston shunter.

PHOTO 13: Member James Smedley travels well behind his Maxitrak Swallow 0-4-0 loco.

Also being prepared for the day's work was a very nice and unusual prototype in the shape of a Black Hawthorne & Co Ltd 0-6-0 Saddle Tank which had been built by Andy Briggs (Photo 11). This is a powerful loco and ran throughout the day.

One of the club's younger members, Thomas Hutton, enjoyed his track time with his 7¼-inch gauge Ruston 0-4-0 shunter (Photo 12). Another, James Smedley, had his tiny 5-inch gauge 0-4-0 Maxitrak 'Swallow' going very well (Photo 13).

There was a small selection of models on display – the engine block for the Foden Steam Six steam lorry that is under construction by Norman Smedley was always being examined by visitors to the event (Photo 14).

Dave Calvert showed off his latest effort with a 5-inch gauge Midland 4-4-0 Compound locomotive, still under construction but showing some good workmanship (Photo 15).

Road runners

Complimenting the locomotives on the track was a nice selection of traction engines and here it was good to see a number of young people who were involved in the preparing and operating of these engines.

Among the youngsters involved in the activities was 10-year old Charlie Johnson, who was driving his grandad's 47-year old Wallis &

Steevens Simplicity roller (Photo 16).

Alli Knott and his sons Alfie and William soon had their 3-inch scale Burrell steamed up and the boys enjoyed driving dad's engine around the adjacent sports field (Photo 17).

Other road engines present included a very nice 4½-inch scale McLaren traction engine owned and built by Chris Smith (Photo 18) while Graham Wissum had brought his 4-inch scale Burrell along for the day – with the McLaren it made a fine sight gently turning over during a stay on the patio area of the clubhouse, as pictured on this month's cover.

On the raised track Stewart Jackson was preparing a superb example of a 5-inch gauge twin-truck Class B Shay locomotive. With lots of fine detail and an impressive steam pump which contains 16 ball valves, the engine performed superbly on the track (Photo 19).

Successful club

Membership at Melton Mowbray currently numbers around 50 with quite a high proportion active in the club and building models. Since my last visit some years ago members have built a good-sized clubhouse with all the usual club facilities. There is a large paved patio area outside which gives plenty of scope for members and guests to sit and enjoy the track as well as providing a good space for traction engines to parade.

PHOTO 14: The engine block of Norman Smedley's Foden Speed Six lorry.

PHOTO 15: Dave Calvert is building a 5-inch gauge Midland Compound loco.

PHOTO 16: Charlie Johnson, aged 10, drives a Wallis & Steevens Simplicity roller his grandfather made some 47 years ago.

PHOTO 17: William and Alfie Knott on dad's 3-inch Burrell.

PHOTO 18: The 4½-inch McLaren traction engine built by Chris Smith.

PHOTO 19: The 5-inch gauge Shay loco takes owner Stewart Jackson and his wife round the raised track.

The club's facilities are very good with excellent access for unloading with suitable traversers to access the steaming bays (Photo 058). These are at a good height for servicing even the largest locomotives.

The day concluded with lots of members still enjoying the track and its environs and the smell of coal-fired engines adding to the atmosphere. I must thank everyone at Melton Mowbray for making me so welcome and I must also congratulate the members who received their Honorary Memberships, great model engineers all of them.

My thanks also to the ladies of the club who worked very hard during the morning preparing a wonderful buffet lunch for everyone, it was much appreciated and I hope this progressive club will carry on with their activities and enjoy their new facility to its limit. EIM

Spring has Sprung...

Springs keep taking up too much of our Fairbourne Railway Engineer's time this month, as the 12¼-inch gauge line's annual Gala looms closer...

BY **HARRY BILLMORE**

The past month has seen me continuing the repair to the Fairbourne Miniature Railway's 6-inch scale Darjeeling Himalayan Railway B-Class 'Sherpa' by finishing the machining of the radius rod, which involved machining a taper into the top and bottom of the rod.

The easiest way I have of producing such a cosmetic taper, is to mark out the final thicknesses of the rod at each end where the taper starts and finishes. I then mount the rod in the vice with a machine jack under one end and adjust the height of the rod (Photo 1) so the marking out matches the bottom of the tool held in the chuck, then move the table over and repeat the procedure at the other end (Photo 2). You will need to repeat this process a couple of times depending on where you can support the rod.

Once both ends have their final finish-size lined up with the tool base, you can then drop the table and start machining away until you reach the marks and your taper is complete!

Quality time

Once I had finished the main taper on both sides, I used a ball-nose bit to create a radius at each end as I have described previously, then spent some quality time with a set of good files rounding over the clevis end of the rod (Photo 3) before draw-filing the machining marks out of the flat surfaces of the rod (Photo 4) – this really does improve the finished look of a set of rods (Photo 5).

With the filing complete, I could then fit the old bronze bearing and check how straight and true the rod

PHOTO 1: Setting the depth of the cutter to the scribed line on the rod.

PHOTO 2: Setting the scribed line at the other end to the cutter depth to get the desired taper.

PHOTO 3: Some quality time spent with a set of good files and the eye is nicely profiled.

PHOTO 4: Draw-filing the machining marks out of the rod.

PHOTO 5: The final finish achieved with the files.

PHOTO 6: Cold-setting the rod back straight after machining is complete.

PHOTO 7: The new and old rods together, the new one is a great degree beefier.

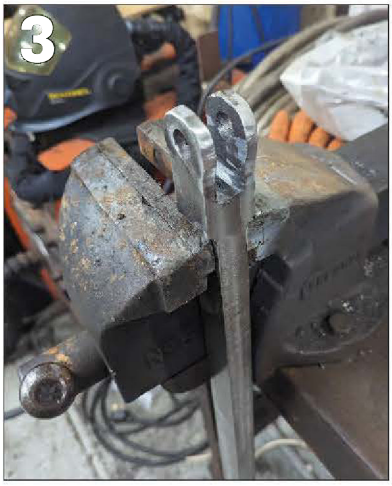

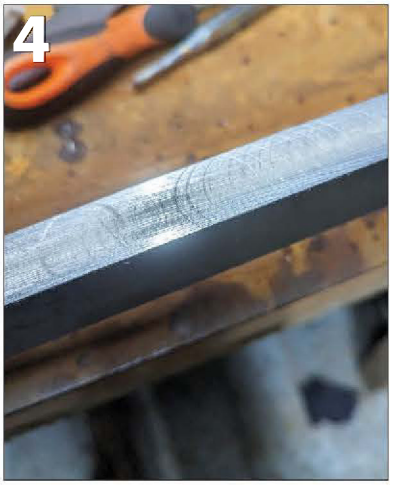

was by putting it onto the return crank pin and raising the clevis to the expansion link bottom. With the amount of material removed from each side, it was inevitable the rod would bend one way or the other, so I used the hydraulic press to cold-set the rod straight and true (Photo 6-7).

The last job before final fitting was to fit a stop to prevent the pin from spinning as it had previously. This was simply a piece of flat bar with two holes drilled in it that correspond with tapped holes in the rod (Photo 8) – the end of the bar fits tightly against the flat on the pin and prevents any rotational movement. I will need to make this modification to all of the motion pins eventually.

I could then fit the rod and check the valve timing (Photo 9) – this was fine and I could take the loco for a test run (Photo 10) to check everything was okay before returning it to traffic.

With Sherpa back on trains again, I could get back to the work I have been doing on our Welsh Highland Railway loco 'Russell'. The first item I went to put back on immediately reminded me that I hadn't dressed all of the crank pins in the mad rush before Christmas.

Photo 11 shows the right-centre crank pin, with the witness mark of the poor set-up of the rods previously. You can also see the groove worn into the crankpin where the vesconite bearing material has worked the pin badly. Dressing the pins was quite awkward as there was so much stuff around them, such as the motion bracket and the tanks which kept getting in the way of my file, but it was all finished reasonably well and the rear coupling rods and connecting rods then went on with a minimum of fuss (Photo 12).

I was about to fit the return cranks when I realized I had not crack-detected the welds on the back of the return crank pins, so it was out with the dye pen sprays to make sure the welds were all fine and no cracks were starting to develop (Photo 13-14). Thankfully they were good so I could fit the pins and the radius rods.

This is when another problem revealed itself, the clevis between the right-hand side radius rod and expansion link was badly scored and extremely tight on the expansion link. I eased this out with a file (Photo 16) to ensure no tight spots would form and the expansion link (Photo 15) was not too badly affected.

Spring shower

After this, Kevin, our Permanent Way supervisor, wandered in and handed me half of a locomotive spring that he had found on the trackside (Photo 17). This resulted in my going round the locos to see which had broken a spring that matched the half I had been given. The loco in service, Sherpa, has easily checked springs and that was all fine, Russell hadn't moved out of the workshop since I fitted the springs before Christmas so the only loco left ▶

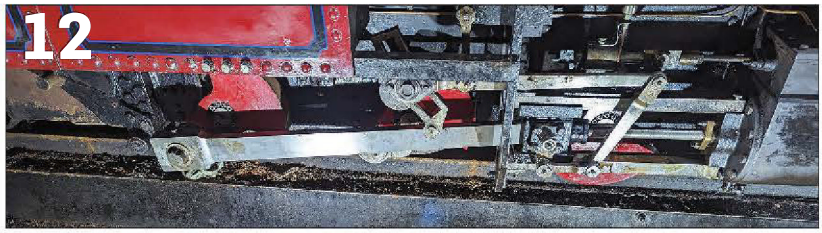

PHOTO 8: A pin clamp to prevent the problem happening again – this fits against a flat on the pin preventing it from spinning.

PHOTO 9: The rod all fitted and the valve timing checked.

PHOTO 10: Sherpa out on test before a return to traffic.

PHOTO 11: One of Russell's centre crank pins that didn't get dressed before Christmas in the rush to get the loco back on its wheels.

PHOTO 12: The existing rods all reassembled and looking good.

PHOTO 13: After problems in the past with welded pins it was decided to crack detect the return crank pin welds.

PHOTO 14: The die-pen testing revealed no cracks.

PHOTO 15: Side wear evident on the expansion link.

PHOTO 16: An extremely tight fitting radius rod required filing on the inside cheeks.

PHOTO 17: Now where might that have come from?...

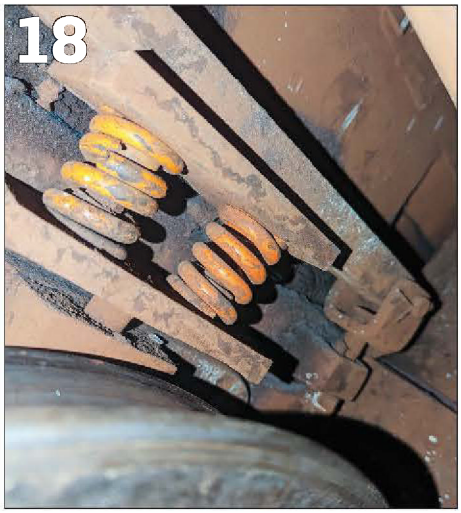

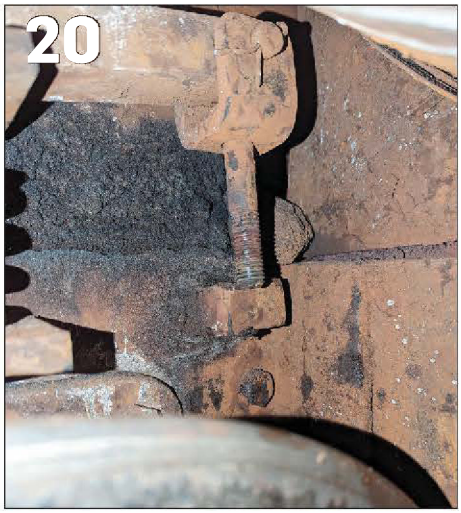

PHOTO 18: Not the broken spring Harry was looking for, but one that will need replacing anyway.

PHOTO 19: The new spring fitted in the extremely difficult-to-access spring hanger.

PHOTO 20: Refitting the spring tension adjusters required patience and some dextrous fingers.

PHOTO 21: Finally back to machining new leading coupling rods for Russell.

PHOTO 22: With all the material taken off both sides Harry had expected more warpage, but it's actually perfectly straight.

PHOTO 23: Using a piece of paper to set the height of the ball-nose cutter.

PHOTO 24: The resulting finish on the rod.

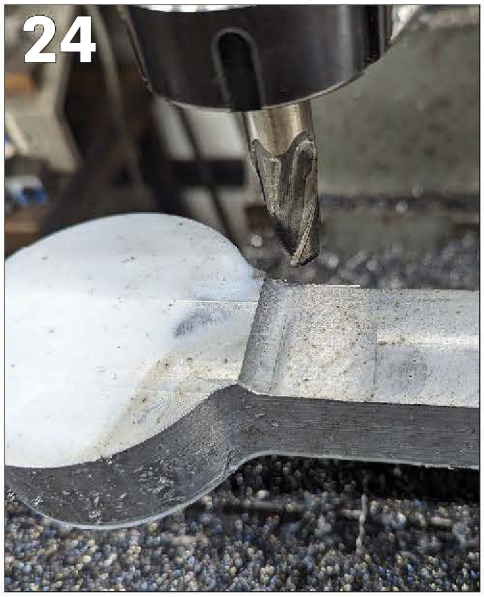

was our Lynton & Barnstaple Railway Manning Wardle locomotive, 'Yeo'.

This presented a bit of a problem because you cannot actually see the springs on Yeo, the only real way to check them is to stick your hand up the back of the wheel and reach over the top to the space between the wheel and the frame and feel the springs.

I indeed felt something odd on the rear right so stuck my phone up in the gap and took several pictures, the best of which is Photo 18. This revealed a broken spring, but not one that had spat a section out. There were no other breakages anywhere so hopefully the found section was an old one that had already been caught and changed!

Access no areas

The process for changing one of Yeo's springs is to block the back of the engine up, then unwind the spring adjusters – these sit about 10 inches up the frame sides between the frames and the wheels and are therefore pretty much inaccessible without creative use of extensions and a universal joint along with a considerable amount of cursing.

With those removed, the spring cross-bar can be lifted off using fingertips and the old spring removed with your thumb before juggling a new spring into place (Photo 19). I then had the fun of trying to get the spring

PHOTO 25: Cutting the slot for the clevis – with more time Harry would have set this up vertically and machined a square-bottomed slot.

PHOTO 26: The resulting rod blank ready for hole boring.

PHOTO 27: Trusting an edge finder and the DRO to find the centre of the rod eye.

PHOTO 28: Checking by (human) eye this did not look centred...

PHOTO 29: Double checking proved Harry's eye to be correct.

PHOTO 30: The amount the table needed to be moved.

PHOTO 31: The interrupted cut is visible as the hole is centred correctly.

tension adjusters back in their holes and the nuts back on and tightened (Photo 20). The paragraph above took me nearly five hours to complete...

With that minor interruption sorted I could get back to machining Russell's leading coupling rods (Photo 21-22) – these had been profiled out by the CNC at the Welshpool & Llanfair Light Railway, but needed a lot more work to finish them off.

First task was to use a face cutter to get them to their finished thickness, then I used a smaller carbide-tipped cutter to machine the relief in the back face before finishing the radii off with a ball nose end mill (Photo 23-24).

With the rods to the correct thickness and the reliefs cut, I then cut the clevis slot. If I had not been under a tight time pressure, I would have set these up on an angle plate and machined them vertically, however I did not have time for that so I set them up as you can see in Photo 25 and machined them to leave radii in the corners of the slot.

Digital issue

To set the rods up for boring the holes (Photo 26), I used the digital read-out (DRO) and an edge finder (Photo 27) to get the hole centre where it should have been and set to drilling out as much material as possible before setting up the boring head. ▶

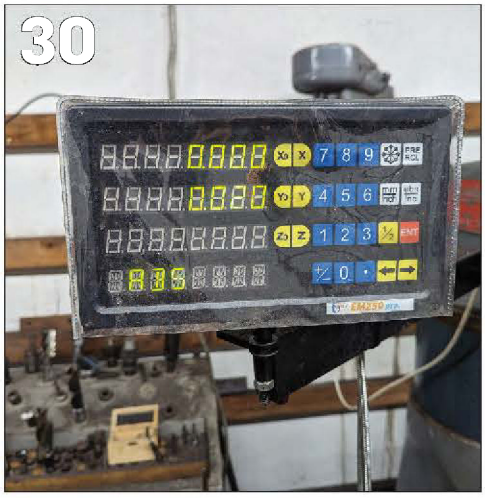

As I swapped the tool over I thought the hole looked a little off-centre so I checked using a vernier. It was 0.4mm out, so I corrected this using the dials on the hand wheels and bored the hole out larger before checking with the vernier again that it was correct (Photo 28-31).

When it came to moving the bed to bore the other end, I kept a careful eye on the DRO and sure enough, it stopped counting while the bed was still moving so I knew there was an issue with it somewhere. Instead of relying on this, I used a set of calipers to scribe the centre of the small-end hole, centre punched the mark and then (Photo 32) used a small drill to centre over the centre punch mark.

Before I drilled this out to final size I employed the set of calipers to check the hole centres were correct from the large hole (Photo 33).

I stripped the DRO sender unit off the back of the mill bed (Photo 34) before I started machining the second rod to try and fix it, but in the end I decided it was quicker just to do the job by the dials and measuring by hand than fault-find on the DRO (Photo 35).

With both of the rods finish machined (Photo 36) I could then use the lathe to machine the bronze bearings to press into the rods. One I could machine to finish-size to fit the crankpin, the other I had to leave undersize to bore offset to match the 1.6mm difference in axle centres (Photo 37-38).

Tight fit

Once all this was complete I fitted the rods and then discovered I hadn't quite left enough clearance on the radius at the rear of the rod – it fouled the motion bracket (Photo 39). It was back onto the milling machine and using the ball-nose mill I moved the radius along the rod to clear the motion bracket (Photo 40). I finished off the knuckle pins from a piece of silver steel and finally fitted the rods.

A test run in steam (Photo 41) followed, with the loco moving around the yard nicely with no signs of binding up or complaining so I put it into the short road of the running shed for further testing and running in. Unfortunately on the following day, when I moved the loco out of the shed and onto the sector plate it immediately started to complain and bind up, so I brought it back onto the running shed road and set about isolating the problem.

View to a kill

I removed one piece of the rods and motion at a time (Photo 42) and tried to move the loco until there was nothing left to remove but it was still binding up. In a distinct pit of despair I leant against the side of the cab and chanced a look down, to see the rear left springs had been spat out of their holder (photo 43) and the top beam was resting on the wheel causing the extreme drag (photo 44).

The procedure for refitting the springs to Russell is very similar to that of Yeo as described above, except most of it is far easier to reach! With the springs re-fitted and the pre-load increased on the rear driving axle springs to prevent the issue from happening again I could finally take Russell out for a test run to the far end of the line at Penrhyn Point, five days before our Gala... EIM

PHOTO 32: Centring the small eye with a set of calipers. A small drill in the centre pop aligned the head exactly over the hole.

PHOTO 33: Reaming the hole to final size.

PHOTO 34: Stripping the sender unit off the bed to clean it out and find the fault.

PHOTO 35: A bit of adaptor in adaptor on the second rod to reduce the use of the boring head.

PHOTO 36: Two new rods next to one of the old ones.

PHOTO 37: Bronze drilled off centre to match the axle centres.

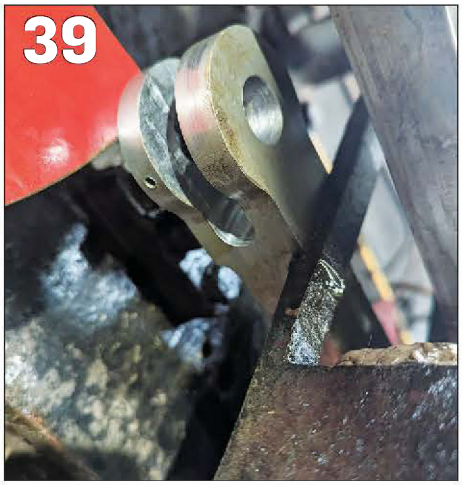

PHOTO 38: You can easily see the difference in bore centres here.

PHOTO 39: The radius Harry put on is now fouling the back of the motion bracket and needs moving further along the rod.

PHOTO 40: How far the radius had to be moved to clear the motion bracket.

PHOTO 41: A good sight – raising steam for the first time since October last year.

PHOTO 42: Late-night rod stripping revealed the binding problem was not the rods...

PHOTO 43: A pair of springs having been ejected from their hanger – note the cross beam resting on the wheel.

PHOTO 44: The score mark caused by the cross beam on the freshly turned wheel.

PHOTO 45: Finally! A successful test run.

All photos by the author

Sub500 – a pair of 5-inch gauge electric locos

Rich and fellow model engineer Julian continue their budget build battery loco project intended for their grandchildren, this month focusing on the frames.

BY **RICH WIGHTMAN** & **JULIAN HARRISON** Part Two of a short series

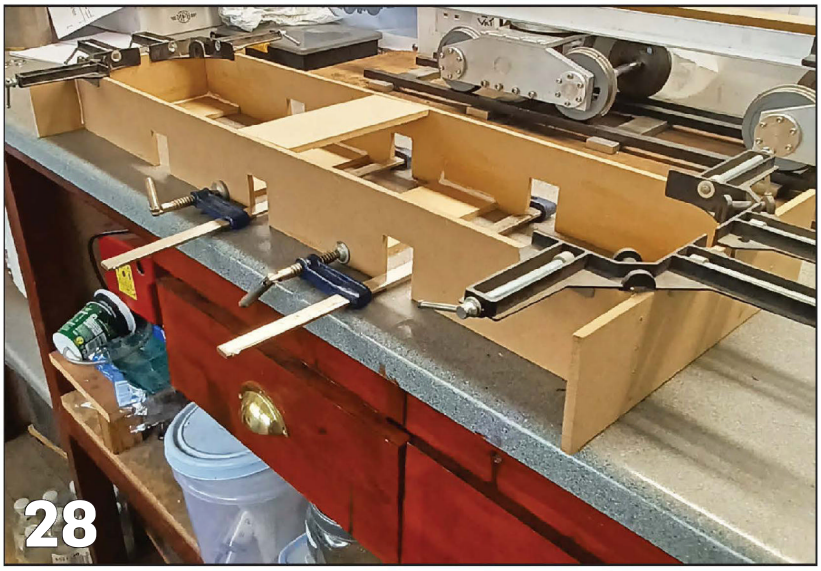

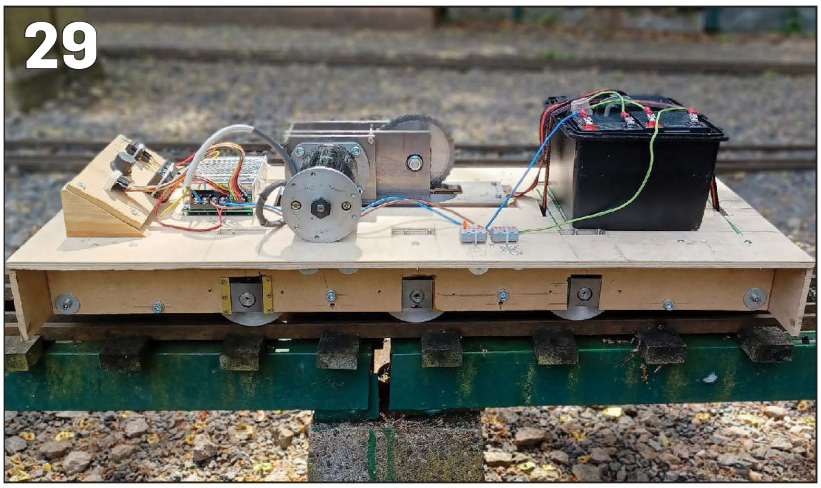

"How do you put a large smile on the faces of a group of men? Give them a locomotive to play with.."

Before cutting up our nice new shiny bits of frame steel we decided to make a mock-up of the frames in 6mm MDF to check our measurements (Photo 28). We were using 8mm pitch chain to drive the axles so the axle spacing needed to be correct – too far apart and the chain wouldn't go on, too close and the chain will be too slack.

In practice the chains did stretch a little but with the short pitch of 8mm we found that fitting a half link would take out any excess slack. Initially we used one of the many chain/sprocket calculators on the internet to find the correct spacing.

The MDF frames were assembled with pins and wood glue and once set were remarkably rigid. By now Julian had finished one of the gearboxes/transmissions, a self-contained unit. We decided to slip the axles into our MDF frames, the axleboxes going straight into the MDF with some temporary springs and some brass strip as horn keeps screwed on.

The gearbox/transmission was

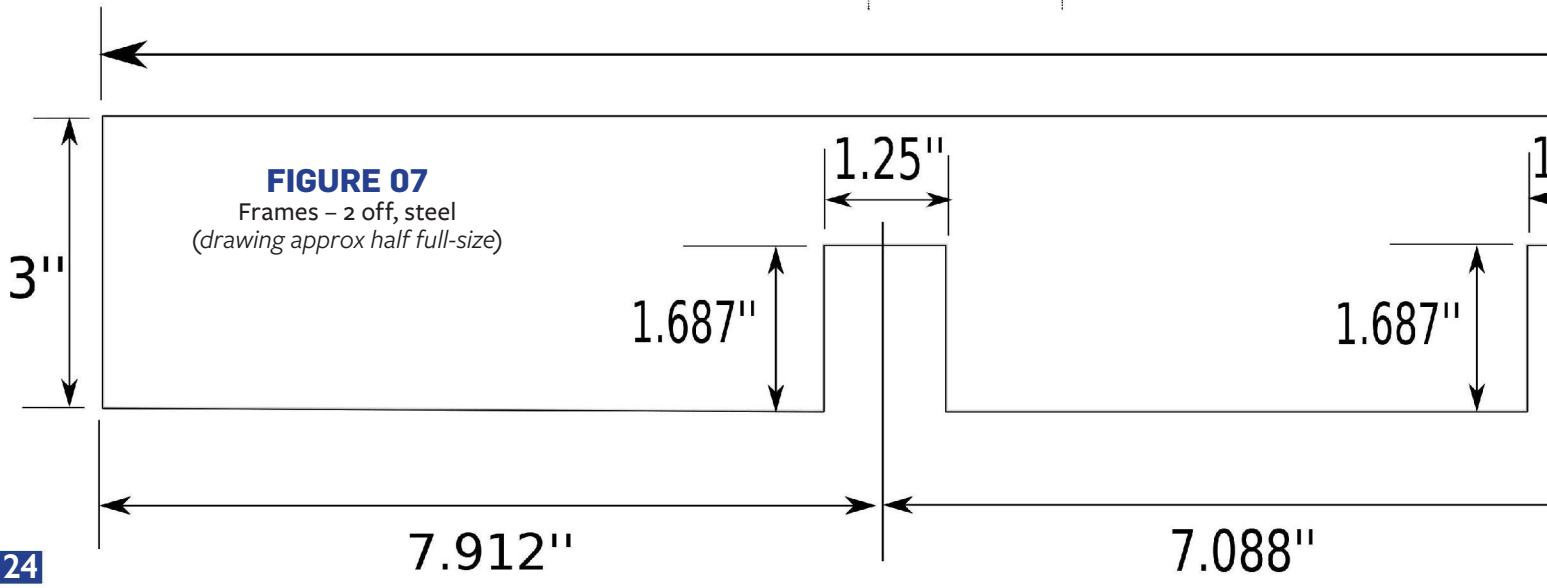

FIGURE 07
Frames – 2 off, steel
(*drawing approx half full-size*)

screwed on and the chains fitted. Julian had made up a basic set of electronics, which he will go into detail with later. We robbed the two mobility scooter batteries from my granddaughters' car and powered the chassis up.

Practical test

It ran – so well in fact that on the following Wednesday we took it to the Club track to test it out (Photo 29), much to the amusement of some other members who were there doing some maintenance. We lifted it onto the raised track, coupled up one of the club riding cars and Julian shot off round the raised track with a big grin on his face. You can watch a short video of the test run by scanning the QR Code on the opposite page or at https://youtu.be/_zm12kKctdg

Now it was my turn. I shot off round the track with an equally large grin. Our club chairman and boiler inspector among a good few others then took their turns. Question; How do you put a large smile on the faces of a group of men? Answer; Give them a locomotive to play with.

A couple of hours later the chassis was still running on the same set of batteries, so with the idea now having been proved to be a viable project we decided to give it a hard test to see how far we could push it even if it meant to the point of destruction.

We coupled up another riding car behind the existing one and had three adults on it, and it pulled them with no problem. In fact if the regulator/speed control handle was opened too quickly it resulted in wheel spin – we figured because of the light weight of the MDF trial version we were losing traction which would be cured by the weight of the steel version.

By now the batteries were about depleted so we called it a day. It had been a very successful day indeed and quite surprisingly the MDF mock-up had survived with no signs of failure.

Confident we were on the right track (if you will pardon the pun) we could continue with the build by making the proper frames. Two are required and are identical. I have provided two drawings of the frames Figure 7 and Figure 8. So as not to clutter up the drawing too much I have shown the basic frame sizes and horn openings on Figure 7 and all the holes that are to be drilled and tapped on Figure 8.

Now we could have chosen ⅛-inch (3mm) steel instead of ¼-inch wide which is cheaper but to keep the number of required parts to a minimum we chose the ¼-inch as it will happily take an M4 thread into the sides and the edges. If you choose to use the ⅛-inch (3mm) then extra angles will need to be made for the top stretchers and such and the buffer angles positioned closer together or spacers made for the narrower frame material. Aluminium is another option but you would have to make and fit horns as the axleboxes on our design run directly in the steel frames.

Let's start with the basic frame and horn openings. We need to cut two lengths of the 3-inch x ¼-inch steel bar to about 30¼ inches to allow for a little squaring up. Something I have never forgotten and which has stood me in good stead for many years is a tip given to me by a top-notch carpenter some 40-odd years ago. "Always start with a square end" he said – very good advice.

Digital time-saver

We clamp the two frames together and scribe a square line across. I have digital readouts on my milling machine which are brilliant and make life a lot easier so I will be using them throughout the build. If you don't have them then use the old method of marking out as accurately as possible. There are some measurements that are critical and must be accurate so I will point them out as we go along.

Also if you are using the marking out method then you may have to make some parts in a different order to the way described here. For holes that must line up, for example the buffer beam angles, drill the angles first then spot them through onto the frames. I like to mark pieces with a number punch or centre punch to aid assembly later on.

Square up the end of the two frames in the milling machine (Photo 30) and either mark out or use the ▶

"A tip given to me by a top-notch carpenter some 40-odd years ago. 'Always start with a square end' he said – very good advice..."

PHOTO 28: Making up the frames in MDF provided a check of the measurements...

PHOTO 29: ...and worked so well that the chassis provided an afternoon's entertainment at the track.

PHOTO 30: Frame ends being squared up in the milling machine – all four for the two locos are being done together.

All photos and diagrams by the authors

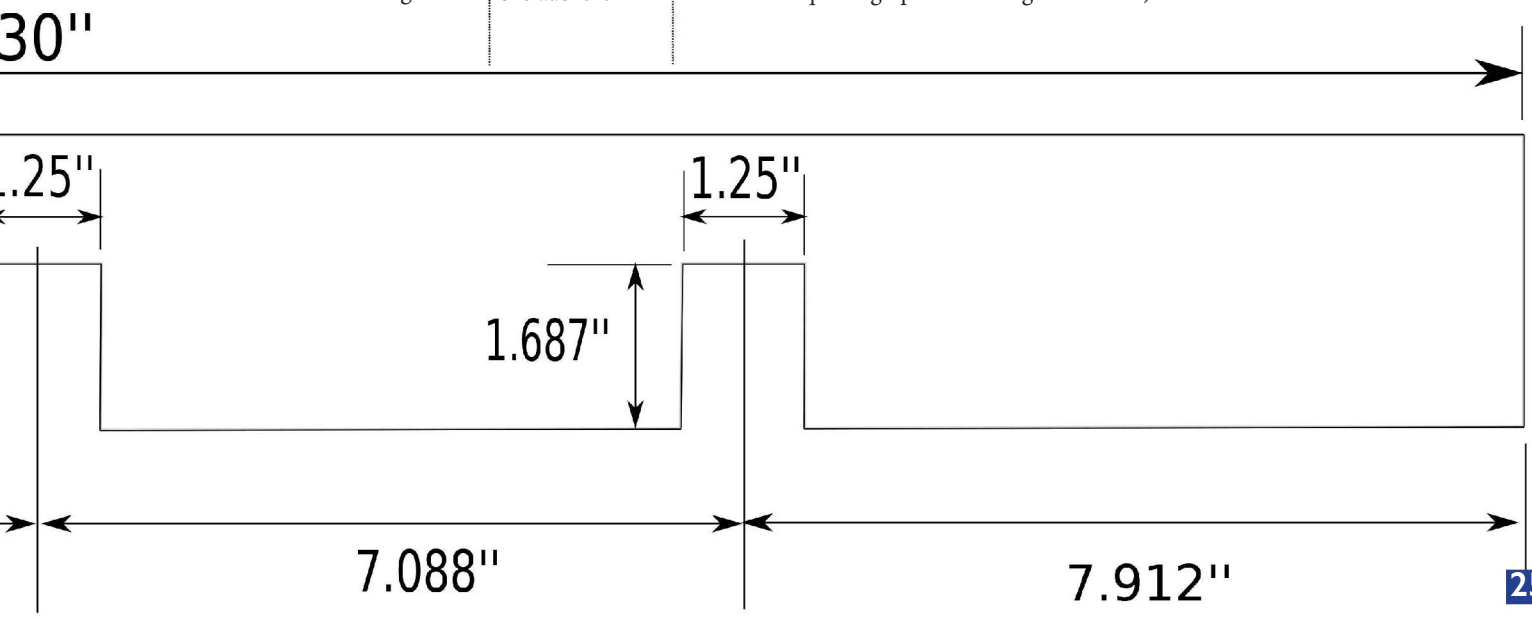

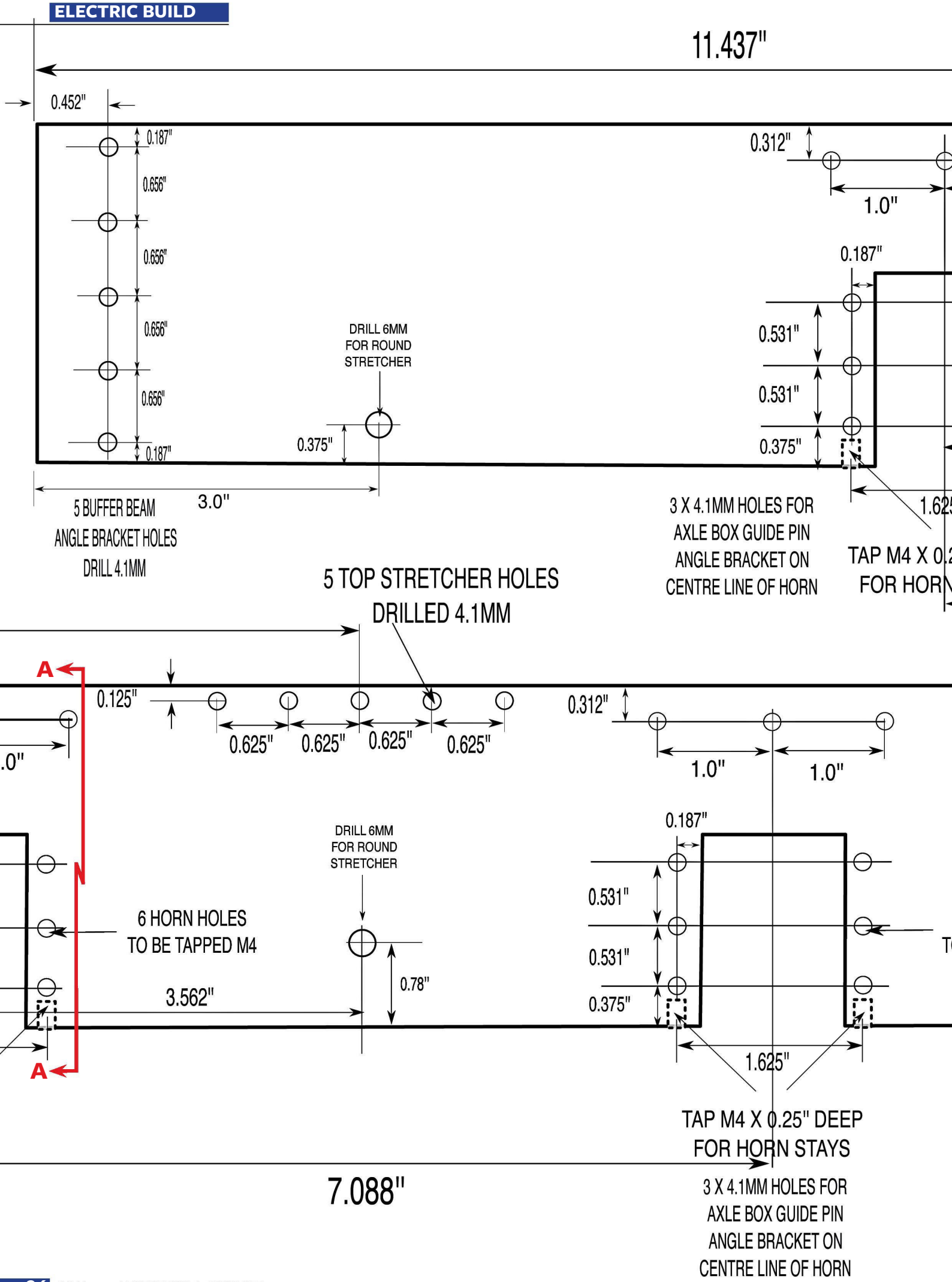
11.437"
0.452"
0.187"
0.656"
0.656"
0.656"
0.656"
0.187"
DRILL 6MM
FOR ROUND
STRETCHER
0.375"
0.312"
1.0"
0.187"
0.531"
0.531"
0.375"
5 BUFFER BEAM
ANGLE BRACKET HOLES
DRILL 4.1MM
3.0"
3 X 4.1MM HOLES FOR
AXLE BOX GUIDE PIN
ANGLE BRACKET ON
CENTRE LINE OF HORN
TAP M4 X 0.
FOR HORN
5 TOP STRETCHER HOLES
DRILLED 4.1MM
A
0.125"
0.625"
0.625"
0.625"
0.625"
0.312"
1.0"
1.0"
DRILL 6MM
FOR ROUND
STRETCHER
0.187"
0.531"
0.531"
0.375"
6 HORN HOLES
TO BE TAPPED M4
3.562"
0.78"
1.625"
A
TAP M4 X 0.25" DEEP
FOR HORN STAYS
7.088"
3 X 4.1MM HOLES FOR
AXLE BOX GUIDE PIN
ANGLE BRACKET ON
CENTRE LINE OF HORN

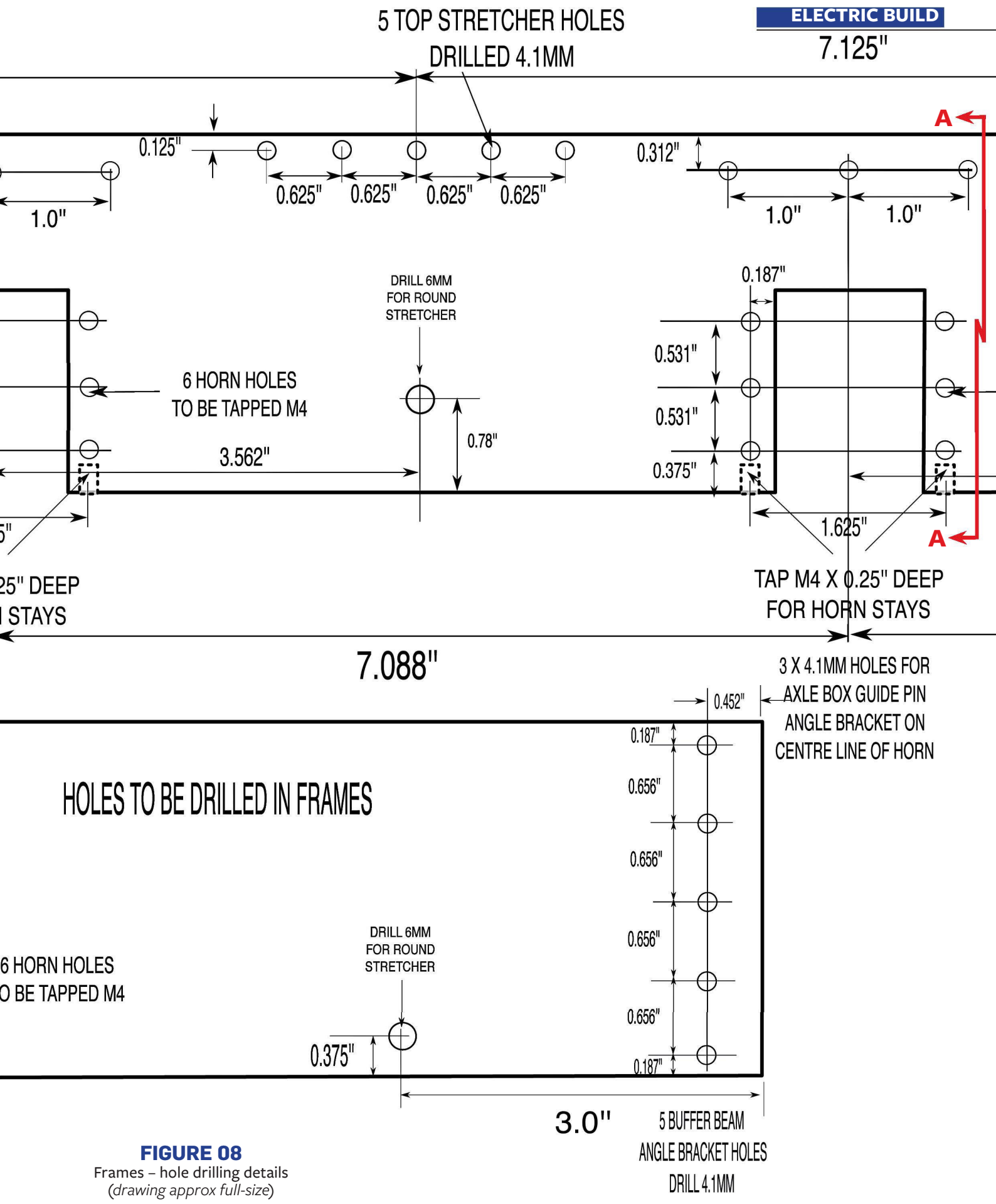

FIGURE 08
Frames – hole drilling details
(*drawing approx full-size*)

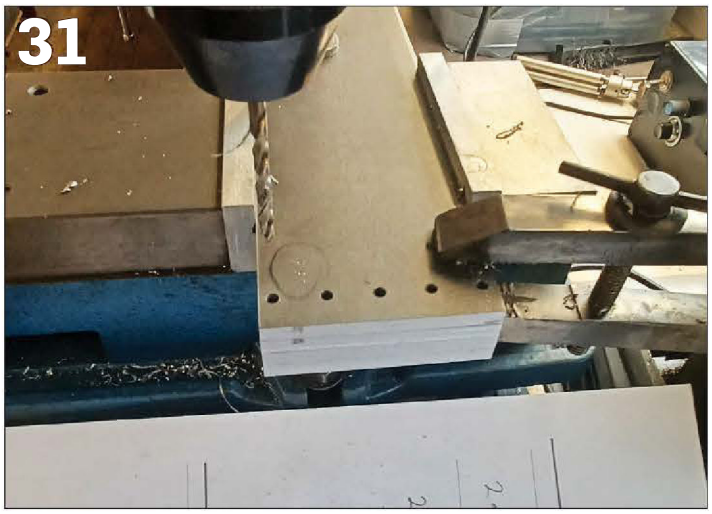

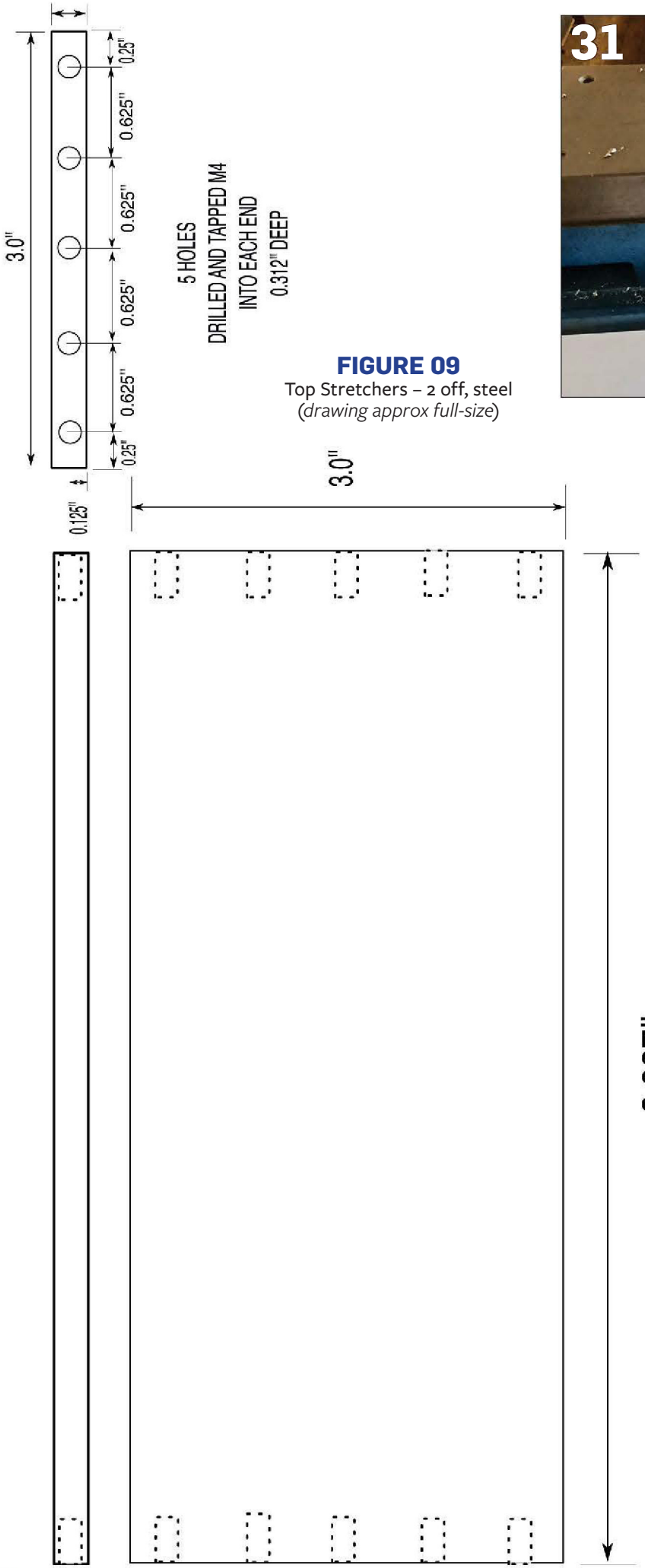

FIGURE 09
Top Stretchers – 2 off, steel
(*drawing approx full-size*)

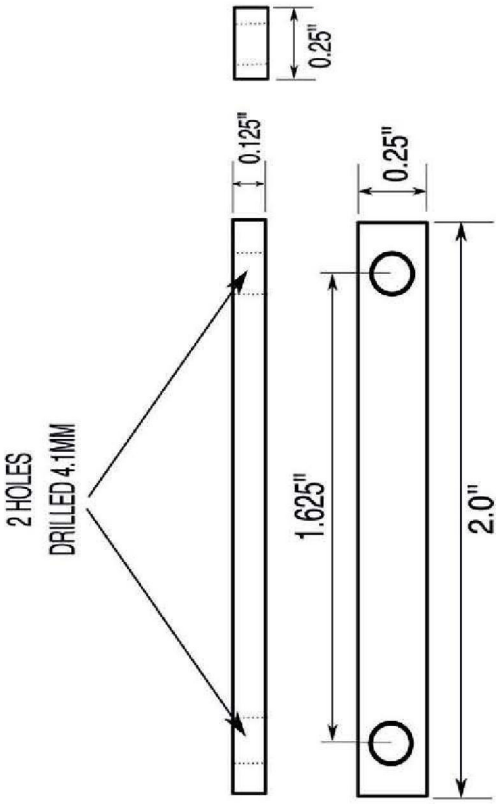

FIGURE 10
Horn Keep – 6 off, steel
(*drawing approx full-size*)

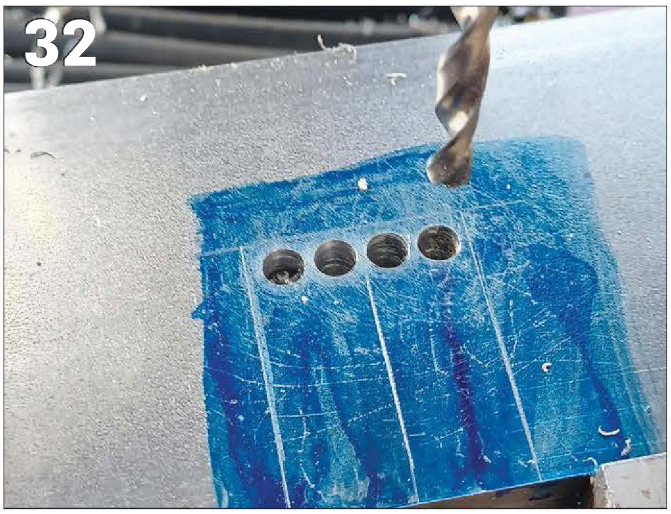

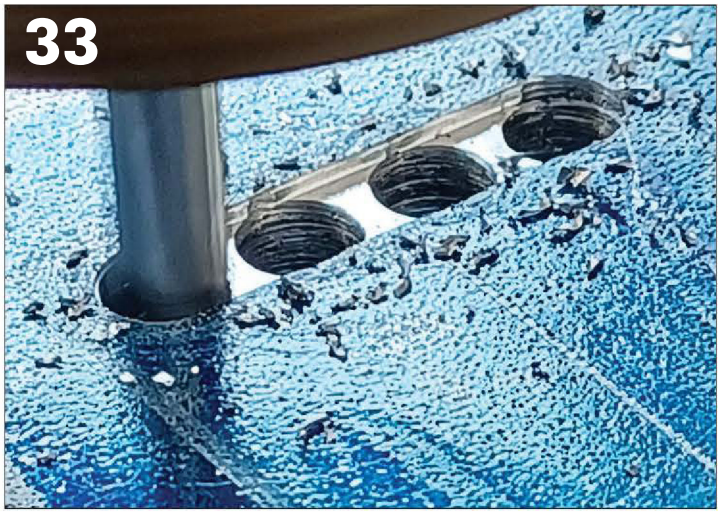

DRO to drill five holes for the buffer beam angles using a 4.1mm drill (Photo 31). Note there are four frames being machined at once in the picture and I have stamped identification marks on the frames.

Bolt-on solution

I have for many years used metric stainless-steel bolts, screws and nuts and found them to be very reasonably priced. If you have a stock of BA or Whitworth or a jam jar full of whatever-size bolts use them and adjust the drill size to suit. We are after all on a tight budget here so use whatever you have.

Bolt this end of the two frames together, flip them over and finish the frames to 30 inches in length. Repeat the drilling at this end for the bufferbeam angles and bolt together.

Next mark out and cut out the horns. It could be done by chain drilling then using a hacksaw and file. I drilled holes across the top of the horns (Photo 32) close to but not quite up to the finished height then machined across the drilled holes with an end mill (Photo 33-34). The waste was then cut out on the bandsaw (Photo 35).

A couple of things to aim for here. Firstly the spacing must be accurate. We are going to be using 8mm pitch chain to connect the axles so too close together will result in the chain being too slack – too far apart and the chain will not fit.

Secondly the axleboxes will be running directly in the frames so the horn width of 1¼ inches should be observed. Use your axleboxes as a guide to getting the horns to the correct size. The axleboxes should be a nice sliding fit (Photo 36) – it's unlikely, in our opinion, that the axleboxes will wear the frames away significantly for many years.

An upgrade for builders with more experience would be to enlarge the width and make their own bronze horns to suit. The horn openings can ▶

PHOTO 31: Drilling holes in frames for bufferbeam fixing angles.

PHOTO 32: First stage in producing cut-outs in frames for horns – four holes drilled close to top of cut-out.

PHOTO 33: End mill used to machine across four holes.

PHOTO 34: Finished slot after machining completed.

PHOTO 35: Bandsaw used to cut down to slot – note all four frames are still being one together.

PHOTO 36: Axlebox tried in finished frame cut-out – it should be a nice sliding fit.

PHOTO 37: Five of the six horn keeps made from flat steel bar.

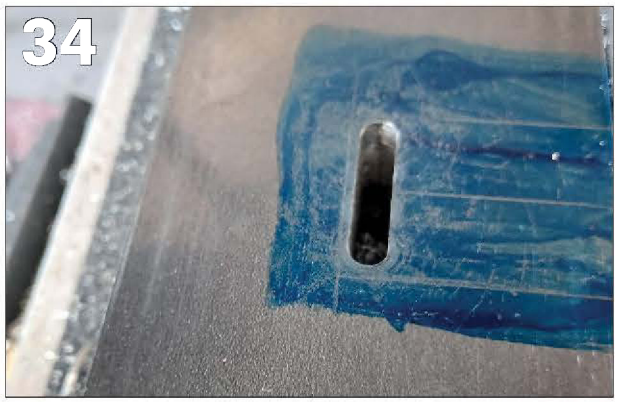

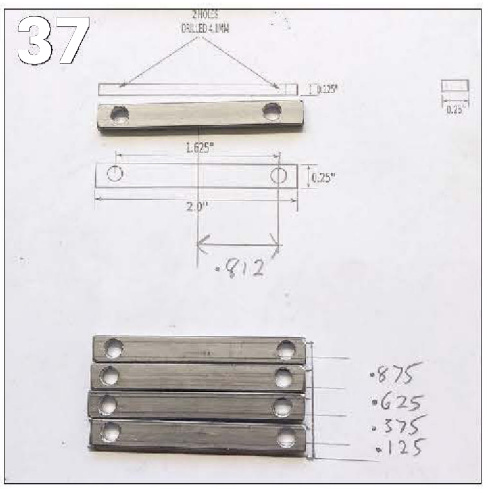

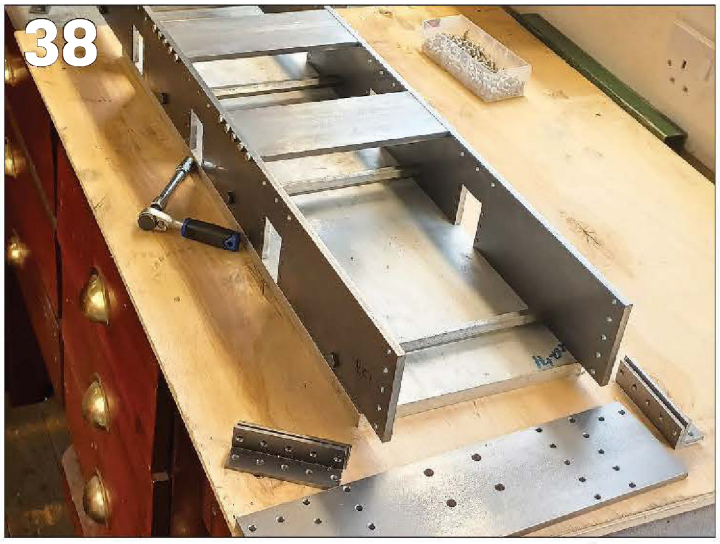

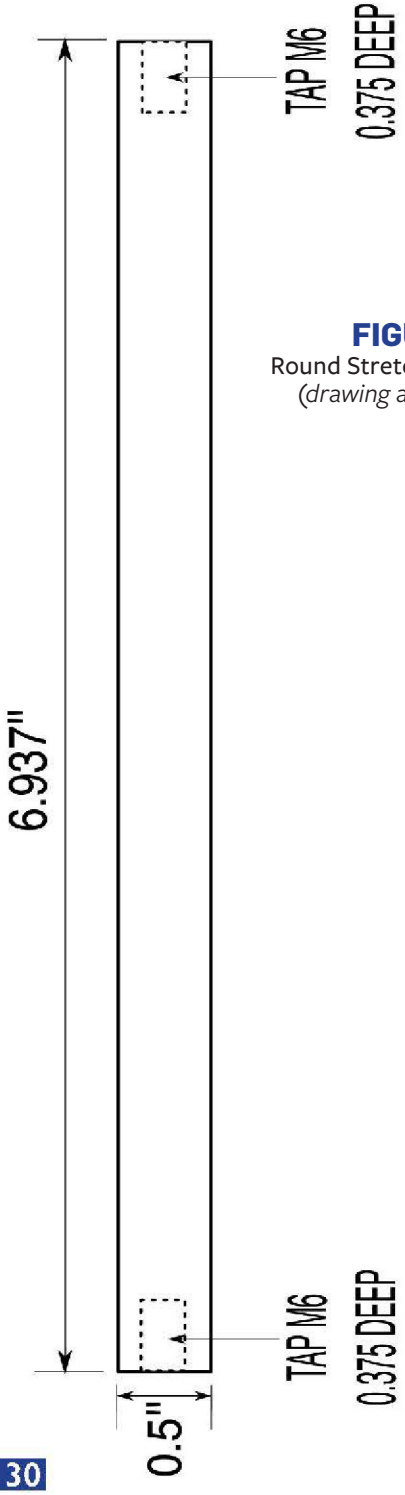

FIGURE 11
Round Stretcher – 4 off, steel
(*drawing approx full-size*)

be further fettled later to accommodate each pair of axleboxes.

Once the basic frames and horns have been machined you can now refer to the other drawing of the frames to drill and/or tap all the required holes. Once again if you have a stock of nuts and bolts drill and tap to suit them.

Laser alternative

I have submitted plans of the frames and buffer beams to Model Engineers Laser (www.modelengineerslaser.co.uk, usual disclaimer) who will laser-cut a pair of frames for £38.00 (price correct at the time of writing) if you want to speed up the job. Once again, however, this will add to the expense of your project.

Six horn keeps, (Figure 10), are required which are ¼-inch x ⅛-inch flat steel bar (Photo 37). If you are using a DRO drill the holes 1⅝-inch inches apart. If not then drill say 2mm and then spot through onto the frames, then drill to 4.1mm. Mark or bag each part to identify its position on the frames.

The two top stretchers (Figure 9) are identical and are made from the same 3-inch x ¼-inch flat steel bar as the frames. Photo 38 is a shot of the two stretchers fitted to the frame sides. It's important to make them to the correct length so that the frames are equally spaced.

Five M4 holes must be drilled and tapped into each end, (Photo 39). Once again I used my DROs but you could clamp the stretchers to the frames and spot the holes through. An alternative method would be to make and fit angles to attach them to the frames but this would mean making four extra parts. Note again that in the picture I am machining four stretchers for two locos.

The four lower bar stretchers (Photo 40 and Figure 11) must also be machined to the correct length. They are simply drilled and tapped M6 each end. On the plans I have specified ½-inch round steel bar but anything around about that size will do. I had some 7/16-inch hexagonal steel bar surplus to requirements so I used that. EIM

■ Rich and Julian complete the frame components in next month's episode. Part One of this series appeared in last month's edition of EIM. For how to obtain a printed or digital back-number see page 9.

PHOTO 38: Two of the frame stretchers fitted in place.

PHOTO 39: Drilling and tapping holes in ends of the frame stretchers.

PHOTO 40: Lower bar stretchers – accuracy in width is essential.

An improved Schools – building a Roedean

Nick starts considering the cylinders for his 3½-inch gauge Southern Railway locomotive project this month, and again comes up with some improvements on the design.

BY **NICK FEAST** Part Six of a short series

Moving on to the cylinders of my previously acquired part-completed 3½-inch gauge locomotive, this is one area in which I wanted to follow the prototype closer. I have always enjoyed reading about the efforts of steam engineers to improve the efficiency of what are basically very inefficient users of energy.

The last-ditch efforts by people such as David Wardale brought significant improvements right at the end of the development of the steam locomotive – efficiency could be achieved in the high teens of percentages with major mechanical modifications. A miniature locomotive that can consistently hit three per cent on the track will be guaranteed a podium place at IMLEC! Unfortunately the efforts of these last steam engineers were not able to stop the global trend to diesel and electric traction, but we can learn from their work in the world of miniatures.

I came across a fascinating paper by Ian Gaylor of the company Steam Locomotive Design a few years ago. It is entitled *Power and Economy-Developing the ZBs*, and can be found at www.steam-loco-design.co.uk

Rebuild for power

The paper runs to 24 pages that are well worth reading by anyone interested in improving the performance of small engines. Ian describes the rebuilding of locomotives built for the 15-inch gauge Bure Valley Railway in Norfolk, UK. Weighing around 12 tonnes these were based on a standard 2-6-2 design produced in the 1990s by the then Winson Engineering, which of course at the time was also supplying locomotives in the model engineering gauges. They were named ZB after a 2ft 6in gauge design operated in India and Pakistan.

"Performance was inadequate for the increasing needs of the railway so a major redesign was carried out..."

PHOTO 41: Bure Valley Light Railway No. 9 'Mark Timothy' has proven a powerful performer since its front end was redesigned, here photographed on 11th May by EIM editor *Andrew Charman*, supposedly on his holiday....

PHOTO 42: The replacement fabricated steel cylinder unit for BVR No.9 is posed alongside the original casting. Larger valves and passageways resulted in more power and better economy. *Photo courtesy Ian Gaylor, Steam Loco Design*

Photos by the author unless credited

Winson delivered ZB number 9 to the BVR in 1999 – later named 'Mark Timothy', this was a variation on the design, a 2-6-4 tank locomotive with the outside appearance of the Kitson locos operated on the Leek & Manifold Light Railway between 1904 and 1934 (Photo 41).

The 15-inch gauge ZBs displayed numerous engineering problems, which were gradually overcome, but performance was inadequate for the increasing needs of the railway so a major redesign was carried out at the workshops of Alan Keef Ltd. The loco was to remain unsuperheated so the maximum power had to be extracted for the 'front end'.

The valve gear and cylinders were redesigned, using a much larger fabricated cylinder block with bigger valves and streamlined passages. Photo 42 shows the new cylinders alongside the cast originals. After initial testing and minor adjustments the modified locomotive produced more power and used less fuel than before. I look forward to seeing the ▶

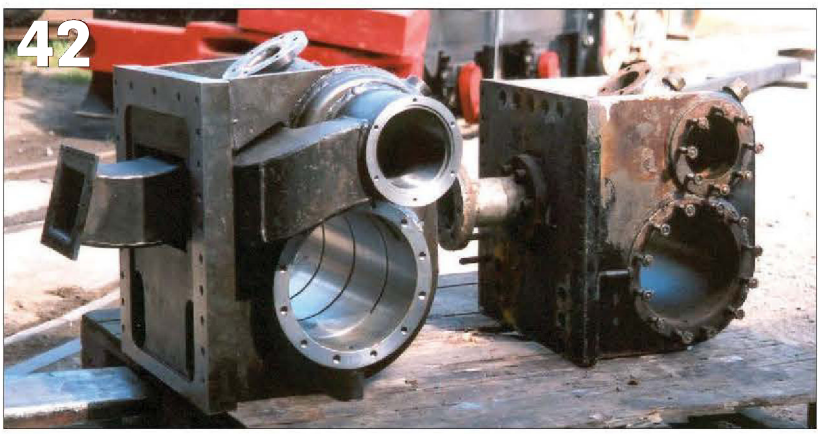

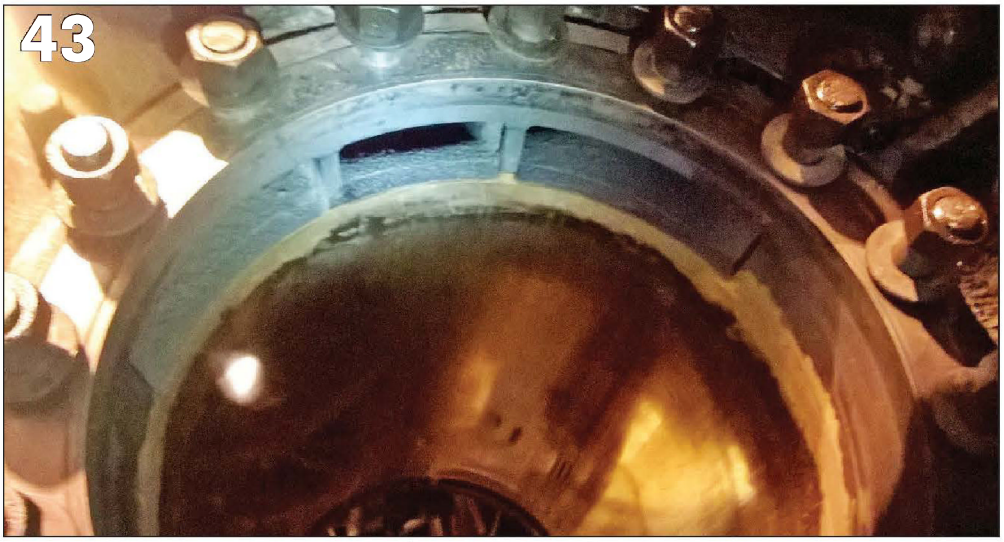

BVR locomotives in use some time!

I have read correspondence in journals covering our hobby in the past claiming that model steam loco designs have adequately sized steam passages, and bear comparison with the full size. Based on my observations this is just not true, perhaps those holding this view have never had a good look inside a full-size one? Just compare the size of these steam ports with the tiny drillings that feature in most miniatures!

Photo 43 is a view into the cylinder bore of a relatively modern steam loco, an Ivatt 2-6-2 tank during overhaul. The transfer passages are positioned around the end of the bore and are generously sized. Compare this to the small drillings usually found on our locos.

Similarly Photo 44 is the view into the valve chest, with the exhaust port nearest the camera and the transfer ports further back directly above the cylinder ends. Finally Photo 45 shows the rear cylinder cover of a different loco, a BR Standard Class 5, which has just been refurbished. The streamlining of the steam flow into and out of the cylinder is apparent and quite impressive.

PHOTO 43: Looking into front of an Ivatt class 2 tank cylinder, a 'modern' design at the end of steam loco development. The steam transfer porting occupies at least 90 degrees of the cylinder circumference. Unusually there are washers fitted under the cover nuts.

PHOTO 44: Matching view into valve bore, with valve removed. Note other end of transfer ports and generous size of the exhaust port.

PHOTO 45: Standard class 5 loco 73096 required a new cylinder end cover after a mishap, seen here prior to refitting. It is a complex casting showing the attention given to streamlining steam flow.

Desirable not possible

When scaled down to our sizes the losses due to friction in steam passages increase proportionally, and so for best efficiency we should in fact be using larger-than-scale ports, which is clearly not possible within the constraints of a scale outline design. However we can at least get somewhere close to scale porting which is what I have tried to do with this build.

Figure 4 and 5 are sections of the Southern Railway general arrangement drawing for the Schools class. The passages are large and streamlined and notably the valve liners are in two parts enabling a large steam chest volume. This is important for free running as it provides a sizeable reservoir of steam to instantly fill the cylinders. It was noted that Bulleid's addition of large chimneys and multiple jet blastpipes did little to improve the performance of the class, as they were already so good.

As already stated, both sets of published drawings for the Schools class came with the parts I purchased at the end of 2019. Although I prefer slide valves for smaller models, the LBSC drawings describe piston valves and these were far more detailed and easier to follow than the slide-valve version by Clarksons, and of course true to the prototype.

The area around the piston valves

FIGURE 4

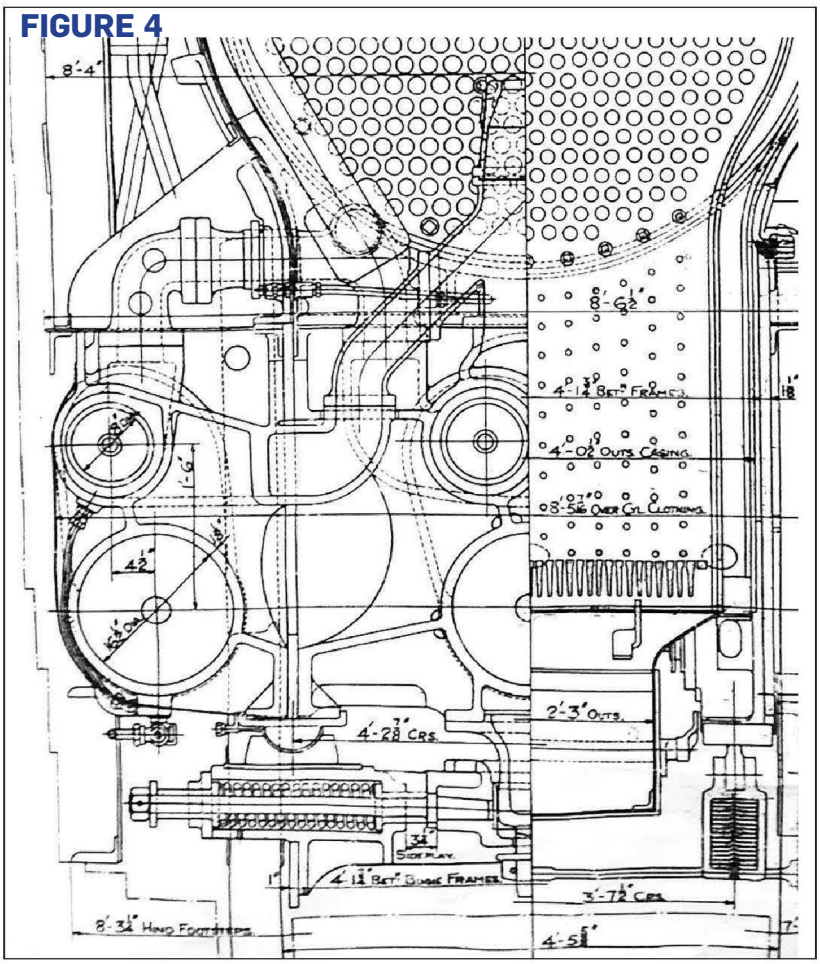

seemed very restricted, however, so I set about modifying the design to use fabricated cylinders with bigger steam chests and passages more akin to the full size and in line with the developments mentioned above.

There was also the matter of cost, and the price of three bronze castings plus the work involved in producing valve liners persuaded me to look at fabrication along the lines of the Bure Valley project.

Figure 6 is the sectional comparison between the cast and fabricated designs – I will cover the details of construction next time. EIM

■ Parts one to five of this series appeared in the February to June 2023 editions of EIM. To download digital back issues or order printed copies go to www.world-of-railways.co.uk/store/back-issues/engineering-in-miniature or call 01778 392484.

FIGURE 4: Sectional view of the front of the Schools class shows the generous steam circuit, key to the success of these locos. LBSC's dimensions for the cylinders and valves are true to scale at 1/16th of the full size, but give very much smaller steam passages.

FIGURE 5: A view showing how the valve liners are separate allowing a large steam chest volume. Nick was not able to fully replicate this feature but a much bigger volume was possible by having separate valve heads.

FIGURE 6: Proposed design for the fabricated cylinder assembly – all three cylinders will be identical internally, but the mounting plates and inlet and exhaust connections will vary slightly. Unlike some three-cylinder designs the cylinders are all horizontal, in line and driving on the same axle.

The LBSC design of cast cylinder is shown for comparison. Valve diameter is proportional to the full size at around 50 per cent of the cylinder diameter, but the volume of the steam chest is much reduced. The radial clearance around the valve bobbin is only 1/16-inch.

Nick has increased the valve diameter to 0.63-inch, calculating that the volume of the steam chest is around seven times that of the cast design. He has also been able to increase the size of the exhaust and transfer ports considerably.

An error that became apparent later in the build is the position of the steam feed pipes. The full size versions are set back further to the rear of the loco to avoid interfering with the exhaust passages. These can be set back by around half an inch, which puts the steam pipe, and its cladding, in about the right place.

FIGURE 5

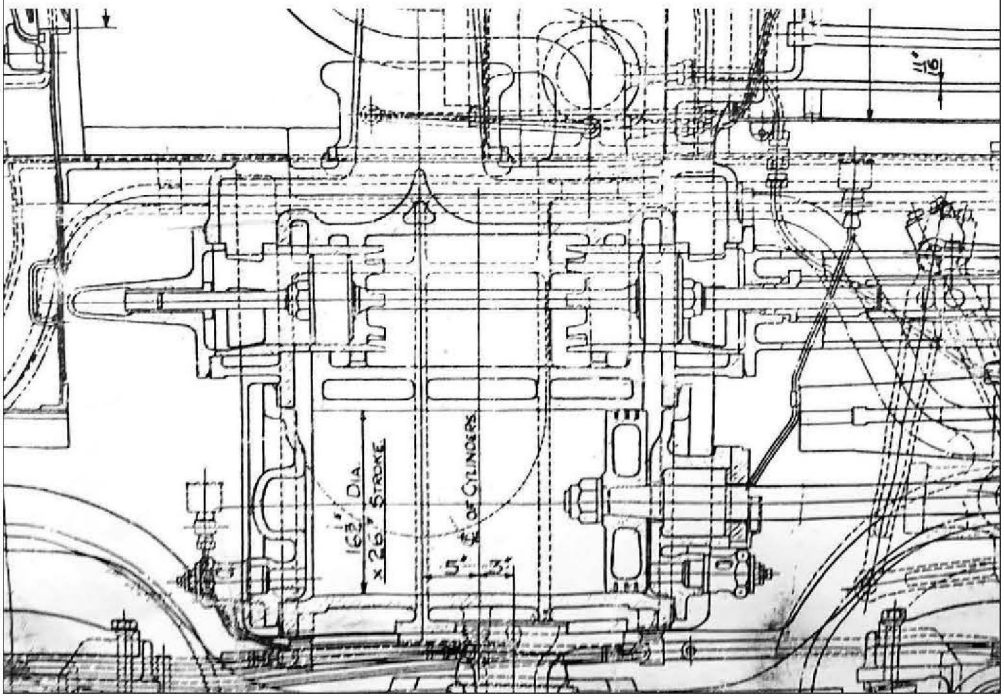

FIGURE 6

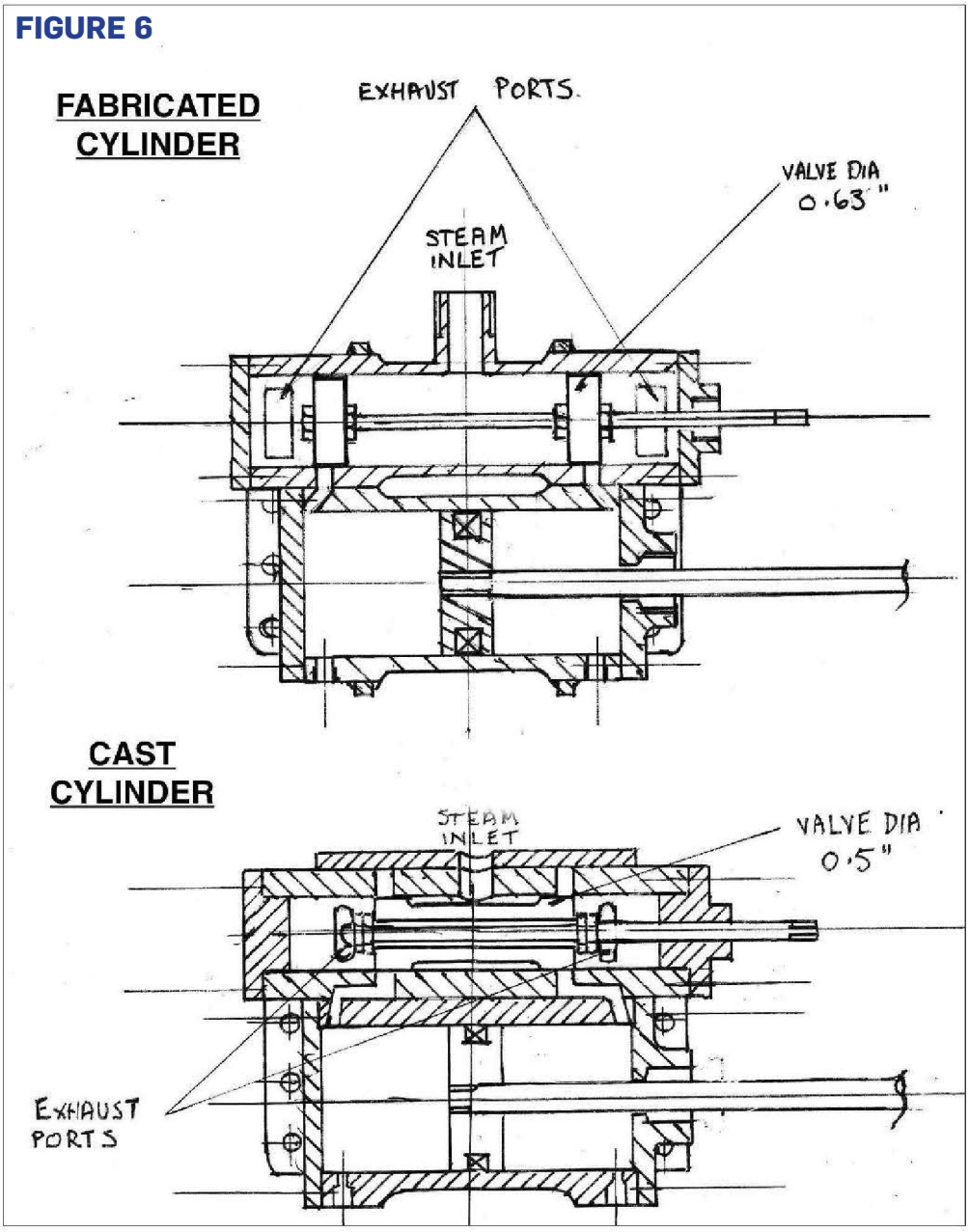

Building a ride-on tender from scratch

This month Peter and Matthew fit the water tank and make the seat for their 7¼-inch gauge ride-on tender beginner's project.

BY **PETER AND MATTHEW KENINGTON** Part Nine of 11

PHOTO 141: Manoeuvring the tank into the body of the tender (or, conversely, manoeuvring the tender body over the tank) is a little tight and hence tricky as can be seen. With hindsight, siting the attachment bracket a few centimetres lower (as the picture is oriented) would have been a good idea!

PHOTO 142: With the tank angled, it goes in relatively easily (and you won't do this too often, hopefully...).

PHOTO 143: The tank in-situ with the as-yet-uncut drain-pipe in place.

PHOTO 144: Close-up of the drain-pipe in position through the rim of the tank.

PHOTO 145: Sealing the lid using plumber's mait. The same was later done to the filler tube, although this was such a good fit that it was probably not necessary.

PHOTO 146: Checking the water tank for leaks.

As our tender was a prototype, we decided that we had better undertake a test-fitting of the tank before going any further with the build. The tank is a little awkward to manoeuvre into place (Photo 141-142) but once in place, the spacing is fairly generous (Photo 143-144).

Having satisfied ourselves that all was well, we set about sealing the tank lid (Photo 145). A disadvantage of the style of box we had chosen is that it is (deliberately) not air-tight – it is designed for domestic storage and many applications of this nature require at least some air flow to prevent the stored contents from deteriorating. We used a generous quantity of 'plumbers' mait' to affect a seal – it is relatively easy to break and re-make a seal made this way if needed, and we had industrial quantities of it lying around from a major plumbing job some years earlier.

Once the tank has been sealed, it is time to check for leaks, prior to painting and final installation. Photo 146 shows our attempts at this task – despite the obvious signs of water more or less everywhere (Matthew was a little over-enthusiastic with the hosepipe!), all seals were excellent.

In particular, the tank was deliberately filled to overflowing (hence the puddle of water on the lid of the tank), as this is something which is very likely to happen during use on a busy public running day. The aim was to be in a situation such that the only way the water could escape was through an overflow of the filling tube – we wanted there to be no leaks from the lid seal, nor from the pipe connector which forms part of the filler tube (and obviously not from the water take-off pipe connection in the bottom of the tank either). In other words, we wanted there to be no way for water to leak into the void under the tender body, as this might hang around for a while and eventually cause rusting (even though this void was destined to be painted).

Following our test, we had to quickly dry all of the metalwork, to prevent further rusting of the unpainted steel. A 15mm compression end-stop will need to be inserted on the water take-off connection in order to perform a leak-test, or the tank will continuously drain from this point.

Water Filler-cap

The water filler-cap was made from 80mm diameter black acetal. This is a lovely material to work with – easy to machine (Photo 147) and capable of a jet-black, smooth (if you want it), finish with relative ease (and no painting!). The basic dimensions are provided in Figure 61.

Parting-off such a large diameter ▶

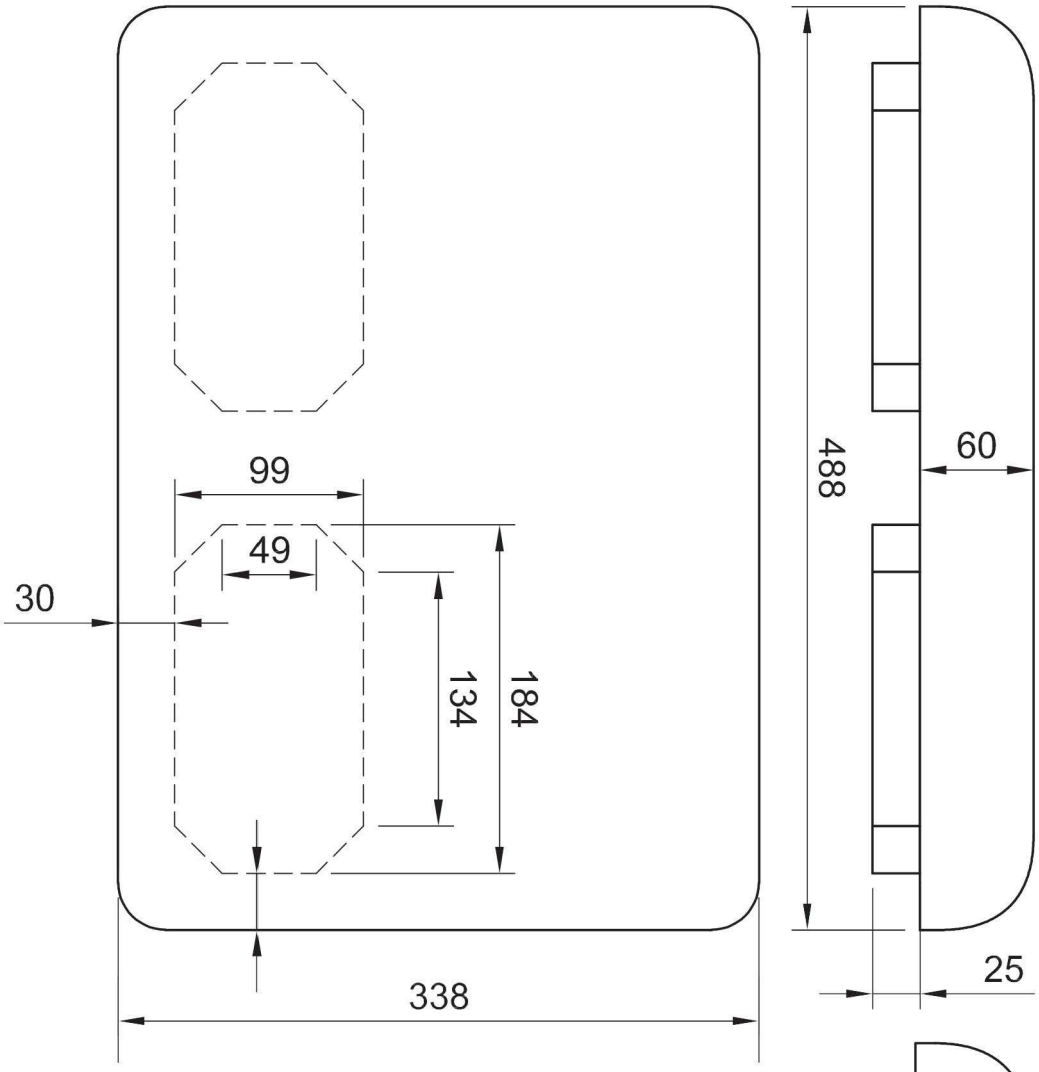

FIGURE 62
Driver's Seat
Approx one-quarter full-size

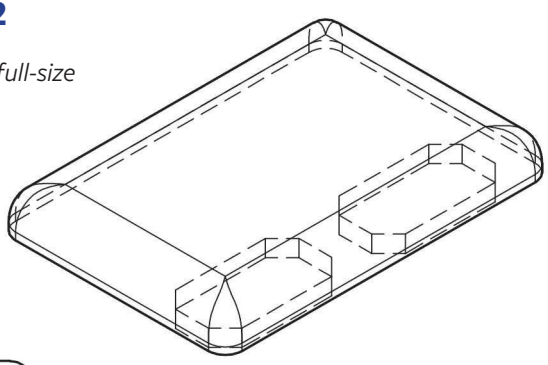

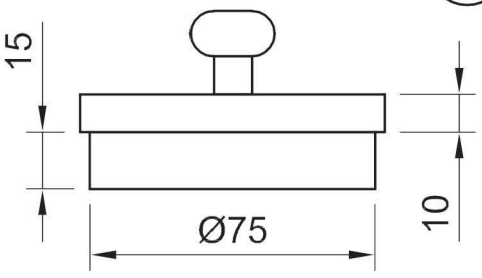

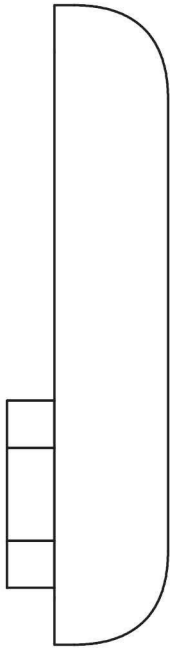

FIGURE 61
Water filler cap
Approx half full-size

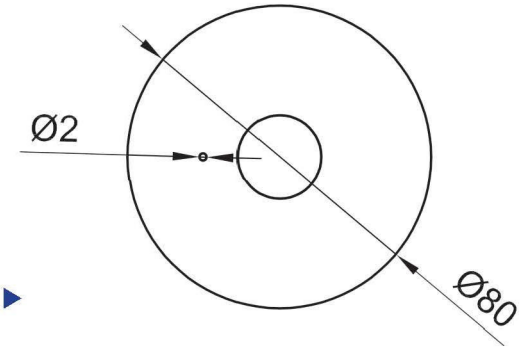

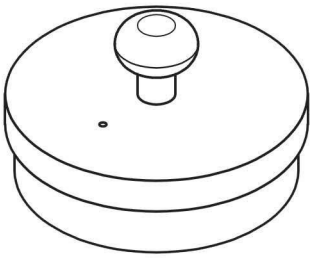

material was a little nerve-racking, but went well (Photo 148).

The handle we used for the filler-cap was a brass drawer-knob and it looks superb when set against the black of the filler cap (Photo 149). The 2mm diameter hole is to allow air into the tank when in use – the rest of the system (stopper, filler-pipe and tank) forms an excellent air-tight seal and so an air-inlet was thought advisable.

Driver's Seat

The seat is made from plywood, with a foam cushion and a leather top. We have used faux-leather on carriage seats in the past and it is not as resilient as 'proper' leather, so we have taken to swallowing the (relatively-small) additional expense to indulge in the luxury of real leather for the various riding-truck seats we have made (which is three and counting).

The dimensions required for the seat are shown in Figure 62. The two protuberances on the underside are designed to locate into the holes in the top of the coal-chute, which are primarily intended to allow coal to be added. This arrangement securely locates the seat and means that it cannot slide forward, for example in the event of heavy braking or a crash (or even just when getting on and off).

The wood was cut during a 'young engineers' club session at Hereford, once they resumed post-lockdowns (Photo 150-151). Once the base was made, it was checked for fit (Photo 152) and then sealed (Photo 153).

The cushion and cover are formed as shown in Photo 154 to Photo 161 – these should hopefully be self-explanatory. The addition of chamfering on the edges of the foam has a surprising impact on the comfort of the resulting seat. Note also that the blue 'high-density' or 'firm' type of foam is much more comfortable for this type of seat (i.e. one with a solid base) than is the standard yellow foam.

Photo 162 shows the completed seat and Photo 163 shows it in-situ on the riding truck. EIM

PHOTO 147-148:: Machining acetal. Parting-off something so thick was a little scary, but went very smoothly as the material isn't 'grippy' when cutting. The completed filler cap is in **PHOTO 149**.

PHOTO 150: Matthew lines up the first cut of the seat base in Hereford SME's lovely woodwork shop – he wore goggles for the actual cutting operation! 10mm plywood was used (the 'cheap and cheerful' variety, as opposed to marine-ply, as some was lying around). In **PHOTO 151** he is making the final cut.

PHOTO 152: Testing the positioning and dimensions of the seat locators on the tender body - this photo is taken looking up through the base of the coal-chute to the underside of the tank-seat

PHOTO 153: Wood-stained seat base-board, complete with locating/retaining pieces. These locate into the filler-apertures of the coal-bunker and prevent the seat from sliding forwards, in-use.

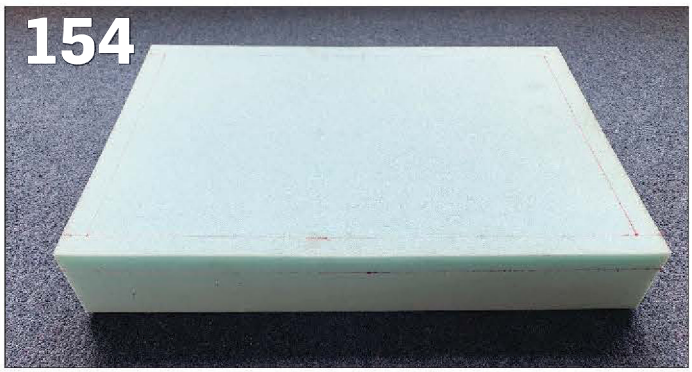

PHOTO 154: Seat foam glued to baseboard and marked out for removal of corners – a small touch that makes the seat more comfortable, as the edges don't 'dig-in' to the driver's legs. It is very easy to do.

PHOTO 155: Foam after trimming with a serrated kitchen-knife (a bread-knife is ideal). The result doesn't need to be perfect, as it will be invisible once the seat-cover is added.

PHOTO 156: First staple (and glue, if desired) two edges of the leather to the underside of the seat base, fold over the open end and draw a cutting line.

PHOTO 157: Trim to the required length.

PHOTO 158: Then fold over a corner and...

PHOTO 159: ...pick up the resulting corner and fold upwards toward the first corner.

PHOTO 160: The resulting corner should look like those on a hospital bed!

PHOTO 161: Mostly stapled in-place (a few more were added in the corners and along the left and right edges).

PHOTO 162: The completed seat cushion.

PHOTO 163: The seat tested in-situ – a lovely, neat, fit.

Differing views on dezincification...

I feel I must take issue with Nick Feast on his comments about boiler dezincification and sulphur fumes from coal (*An imporved Schools – building a Roedean* – EIM *May 2023*).

There are two entirely separate problems here – sulphur fumes attack copper and cause deterioration of the material. Sulphur has no effect on dezincification which is caused by a different process.

Water will slowly leach the zinc from brass. Many people including me have had old steam fittings which disintegrate when trying to remove them. The worst case of dezincification I have encountered was a two-year old hot-water tap which was so badly affected the entire top of the tab had become detached from the base.

The hot-water tap carried water at about 60 degrees centigrade. A boiler at 80psi is at 161 degrees C – higher temperature makes the effect worse so although our boilers are not hot for long periods there is still a potential hidden problem waiting to emerge some time in the future.

There is a type of brass called DZR brass which contains arsenic which is 'resistant' to dezincification, while there is also 'Admiralty Brass' which contains a small amount of tin which makes it much more corrosion-resistant. but I doubt if either is completely immune from the problem. I am not if sure either of these materials would be suitable materials for making a brazed joint.

I don't know which grade of Sifbronze was used, I am sure a boiler inspector would need to know the composition of the material before considering if it was suitable for the task in hand.

To summarize I beg you never to use brass anywhere on your boiler or steam-carrying parts on your engine, not for brazing, not on bushes and not on fittings. There is in my opinion a serious risk that sometime in the future, at best a boiler test will be failed, or at worst there will be a much more serious occurrence.

David Bancroft

"Is there any evidence that it happens to the degree that a model loco boiler is rendered unsafe?"

***Nick Feast** replies:*

I broadly agree with what David Bancroft is saying. Never use brass for bushes or fittings in contact with steam, it will not last. I have access to oxy-acetylene gear and use this for boiler work in addition to propane of course, and brass bushes will just melt anyway.

Nasty consequences can occur if brass is used for safety valves, they can just snap off at the thread if the section there is inadequate. I cringe when I see people removing and replacing their safety valves to fill the boiler with water!

I use Sifbronze no.1 rods for the brazed joints, and you need a lot of heat to get a good joint. The rod must flow into the join and be visible both sides as a smooth surface. If it is 'lumpy' the work has not been hot enough.

It is true that these rods are not actually bronze, having a very low tin content. However, as regards dezincification, no doubt it does happen, my O-level chemistry does not qualify me to comment on the actual process, but is there any evidence that it happens to the degree that a model loco boiler is rendered unsafe?

The likes of LBSC, Alec Farmer and Pete Rich and others have all produced numerous boilers using brazed joints over many years. 50-year old boilers with brazed joints have been dissected having failed for other reasons and no deterioration in the brazing has been found in them.

As I said in the article, if you prefer to silver solder throughout, do it, but I just find this 'hybrid' method of construction produces better results. I am currently running a loco (not very often unfortunately) constructed to this method 18 years ago and it's fine so far. The only boiler-related failure was the disintegration of the copper superheater tubes which turned to a plastic mush – I now use stainless tubes with brazed ends and have had no problems since.

If there is actual evidence out there that dezincification of a brazed copper boiler joint has been an issue then I would be happy to take note, does anyone have any?

Model engineering point to make, advice of information to offer, argument to have?
Send your news and views to
editor@engineeringinminiature.co.uk or
12 Maes Gwyn, Llanfair Caereinion, Powys SY21 0BD

The Planet and Samson Locomotives - their design and development

By Anthony Dawson

Early locomotives hold a fascination all of their own, maybe because they are less well documented than later designs due to there being less original source material to refer to. Therefore when a detailed engineering study of such locos comes along it is all the more welcome, and this book certainly fits the brief.

Produced only a year after the 'Rocket', Robert Stephenson's Planet design is regarded as the world's first true mainine express steam locomotive. Its design included many features that would soon effectively become standard fitments such as a multi-tube boiler and separate frames. With its derivative the Samson it became the first proper class as opposed to one-off design, used across several railways and exported.

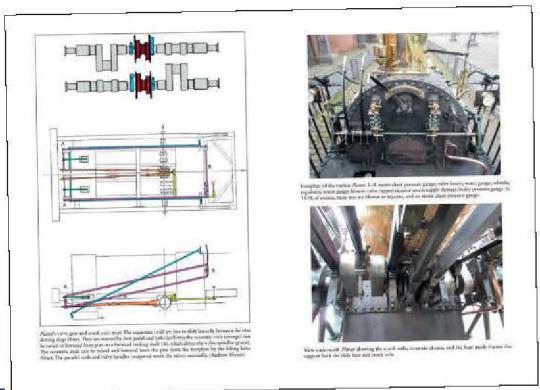

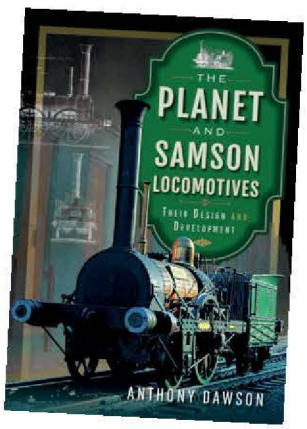

This is a highly detailed work that has clearly required a great deal of research. While it includes the history of the various derivatives of the locos, with plenty of drawings and contemporary illustrations, it's the final section that will most interest EIM readers, comprising a detailed study of the design with a good selection of engineering drawings and component photos. Whether you are planning a model or just like looking at locomotive technical details you will enjoy this book. ***AC***

ISBN 9781 39909 264 7 Price £25.00 Published by Pen & Sword
Email: enquiries@pen-and-sword.co.uk Web: www.pen-and-sword.co.uk

From gardens to the seaside

Readers who get their copy of EIM immediately on publication will just be in time to enjoy this year's Gala at the Littlehampton Miniature Railway, celebrating the 75th anniversary of the seaside 12¼-inch gauge line which opened over the Whitsun weekend of 15th-17th May 1948.

The line is set to welcome two impressive visitors to its event on 24th-25th June. The 0-6-2T+T 'Rosemary', built by the Exmoor Steam Railway in 2001 for the Exbury Gardens Railway in the New Forest, will be running on the Sussex line, as will 'Mad Bess', the Penrhyn-style Hunslet that normally runs on the 12-inch gauge Ruislip Lido Railway (the two lines have been working closely with each other for some time and the quarter-inch difference in gauge is not an issue!)

The two visiting locos will join Littlehampton's own 2-6-2T 'Christopher' to operate an intensive train service over the weekend, between 10am and 5pm on Saturday and 10am to 4pm on Sunday, with the first train from Mewsbrook Park station leaving at 10.40am on both days. More details are on the railway's website at www.littlehamptonminiaturerailway.com

'Rosemary', from the Exbury Gardens Railway, is set to enjoy a new environment.
Photo: Andrew Charman

Boilers for 6-inch Burrell

North Bay Railway Engineering Services, which has produced new-build railway locos in a number of gauges including a run of Bagnall 'Sipat' 0-4-0STs, is launching a new limited edition run of 6-inch scale boilers for the Burrell Devonshire road locomotive.

The boilers are being produced in partnership with Adrian Nutting's AN Engineering, which offers castings and drawings for the Burrell. Each boiler will be fully UKCA or CE certified.

Boilers ordered now will be ready at the end of October or early in November and the cost of each will be £6995 including VAT, collected from North Bay's Darlington workshops, though delivery is also available at cost.

David Humphries of NBRE told EIM that five boilers have already been ordered, adding that the company can produce any boiler from 6-inch scale to full-size.

For more details David can be contacted on 0330 111 0824 or at david@nbres.co.uk. Details of the AN components and drawings for the Burrell are at https://anutting.co.uk/index.php/burrell-devonshire-about-the-model/

■ This picture taken at the 15-inch gauge Rhyl Miniature Railway on 25th May captures a historic moment – the boiler testing exercise marked the first time the north Wales line has had four of the Barnes Atlantic miniature locomotives in ticket since the railway closed in 1969 prior to its later revival.

In the picture are, from left to right 'Billie', 'Joan', 'Railway Queen' and 'Michael'. Recent returnee Billie now has its first boiler ticket since it ceased work in 1980 with the closure of the Dreamland Railway in Margate, Kent, while Michael is returning to service after its last ticket expired in 2020.

The Rhyl line's Justin Bell, who took the picture, told us there is still work to be done to get the two locomotives ready for the Rhyl Gala on 23rd-24th September, but with the granting of the boiler tickets "we took a major step forwards today."

A packed programme...

Events and gatherings are set to dominate what appears to be the busiest month of the year yet for the model engineering fraternity.

COMPILED BY **ANDREW CHARMAN**

Welcome to this month's club and track news round-up and we start on a nice positive note courtesy of **Donald Brooks**, an occasional contributor to these pages but a regular in our sister magazine *Narrow Gauge World*.

Since the mid-1980s, (*Donald writes*), the **Moss Bank Park ME** has been running trains along its 3½/5-inch gauge elevated track through a wood in the middle of the north Bolton park.

Services were abruptly curtailed in early June 1922, however, when thieves stole all of the club's aluminium track, causing an estimated £20,000 worth of damage and creating considerable media interest as a result.

By mid-August the club's dedicated volunteers had restored enough track to allow services to resume over a short section and in 2023, following much hard work, trains are now running all the way round the full half-mile circuit again.

The new track is steel, welded down to deter further problems, and so far is 5-inch gauge only, though the third rail to allow 3½-inch gauge stock to operate will be relaid as time and resources allow.

Trains are currently hauled by battery-electric locomotives and on 13th May the Society took delivery of a new grey-liveried 5-inch gauge Vulcan 4 from Abbots Model Engineering of Telford. The very next day the loco, unnamed and unnumbered, was already in service, sharing passenger duties with American-style Southern Pacific 9724, each hauling two sit-astride carriages. It is hoped that steam will return before too long and details of further developments can be followed on the railway's Facebook page.

"In our hobby if you decide to model narrow gauge you tend to end up with physically a much bigger engine than if you'd gone standard gauge..."

ABOVE RIGHT & BELOW: Two pictures from the revived Moss Bank Park ME track, with its brand-new loco on its first day of service following delivery on 14th May.

Photos by Donald Brooks

Event overload

Excellent stuff – now the next month has plenty of events for the enthusiastic model engineer to attend and certainly a highlight among them will be the annual Gala of the **Guildford ME** on 1st 2nd July. This is a weekend your editor used to enjoy each year when he lived in Surrey – slightly more effort would be needed to attend these days from mid Wales!

The club's Stoke Park location in the Surrey city is certainly practical and they cram a whole lot into their site. We are promised plenty of trains on the ground-level 7¼ and raised 5/3½-inch tracks, as well as operations on the highly attractive 32mm/45mm garden railway, model boats and an indoor model railway, while there are always plenty of interesting side displays of model engineering and other stuff at these events – definitely a worthwhile day out.

The 8th-9th July will see an annual event right up the editor's street, the annual narrow-gauge rally at the **Rugby ME**. This always attracts a host of narrow-gauge hardware, on display and running on the club's extensive facilities. And of course in our hobby if you decide to model narrow gauge you tend to end up with physically a much bigger engine than if you'd gone standard gauge...

Details of the rally, which will feature models in 2½, 3½, 5 and 7¼-inch gauges, are on the Rugby club's website at rugbymes.co.uk – note that it is a pre-bookable gathering for those with suitable engines and not a public event.

There's also a standard-gauge equivalent on 12th-13th August, while perusing the Rugby website I notice that the club is also hosting a private

ABOVE & LEFT: The Editor's poor planning saw the Wells & Walsingham Light Railway's impressive 10¼-inch gauge Garratt in the shed when he finally visited, but he enjoyed an i/c powered ride.

BELOW: The Bure Valley Railway was among narrow gauge lines that marked the King's Coronation – but we've not seen examples of model engineering celebrations?

'disability friendly' family event on 23rd July, aimed especially at those for who the crowds and queueing at public days are difficult to cope with – an excellent idea, well done the Rugby club.

Meanwhile the **Wakefield SMEE** chairman Dennis Halstead has been in touch to tell us that the club is staging an open day at its track in the West Yorkshire city's Thornes Park on the 5th August, and visitors with locos will be welcome.

The club has long operated a ground-level 7¼-inch gauge line of around half a mile in length in the park on Sundays throughout the year, with profits after costs going to the Mayor of Wakefield's charities. It is hoped that a few suitable visiting engines will certainly make for an interesting open day on the line.

If you'd like to take your loco along to the event you can contact Dennis for further details on 01924 457690 or Phil Owen at Blackgates Engineering, 01924 466000.

Have track will travel

What your editor was not aware of until he took a look at the Wakefield club's website (http://wakefieldsmee.co.uk) was that the club has acquired the raised 5/3½-inch gauge circuit that was formerly located at the Clayton West station of the 15-inch gauge Kirklees Light Railway, a former haunt of our tech ed Harry.

The raised line was operated by the Barnsley ME, which sadly had to cease operations – the Wakefield club hopes that giving the track a new lease of life in Thornes Park will allow members to operate the smaller-scale engines they own and hopefully attract more new members, especially younger ones. Several former Barnsley ME members have transferred to Wakefield and are actively involved in installing the track.

Sad news reaching us just as we were about to send these pages to print, John Hawley of the **Old Locomotive Committee** (OLCO) emailed to tell us that the Committee's Chairman, John Brandrick, had died on Monday, 22nd May.

Many readers will know that OLCO is the interest group for the Liverpool & Manchester Railway's locomotive 'Lion', built in 1838, the stand familiar at many a model engineering event. "John was a great character and was so knowledgable on all things railway," John Hawley added. "He was always good company, especially when manning the OLCO stand, which he was so keen to foster and where he was ably assisted by OLCO members, at the various model engineering shows.

"He had recently completed his workshop and was eager to get started on building his own Lion and perhaps, a model of the pumping house at the Princess Graving dock in Liverpool, in which Lion was 'discovered', back in 1923 and later 'rescued' and restored to working order."

John arranged this year's edition of the annual Lionsmeet, with members of the **Birmingham SME** and the event will go ahead on Saturday 1st July, at Birmingham's Ilshaw Heath track at Heath Road, Hockley Heath, Solihull B94 6DN. More details are available at www.birminghamsme.com

Dreaming spires

Another event to look forward to in what is traditionally a very busy month – the **City of Oxford SME** has its traditional Dreaming Spires Rally on 21st to 23rd July at its Cutterslowe Park site in the city, described as "minutes away" from the M40 motorway and A34 trunk road.

Facilities include a ground-level 7¼-inch gauge track with a recent extension, raised 5/3½-inch gauge track and plenty of hard parkland pathways on which to run model road vehicles. Secure overnight storage is available for locos, plenty of refreshments and a bookable fish & chip supper on the Saturday evening, and even a bus into the city for those wanting a break from the action!

For those wanting more details of what is always a very good event (we carried a report on last year's in the September 2022 issue), Denis Mulford will be pleased to hear from you on ▶

A couple of shots that were just squeezed out of *John Arrowsmith*'s report on the opening of the Melton Mowbray track extension...

ABOVE: Jeff Gregg takes his Black 5 across the road past the station.

BELOW: Alli Knott with his 3-inch Burrell traction engine.

07850 062932 or by email at denis.mulford@btinternet.com.

If you read my editorial on page 3 you'll know I enjoyed a week in Norfolk at the start of the month, just too early for the **North Norfolk ME**! Chairman Gordon Ford got in touch following my return to update me on progress at the club, which has been rebuilding its track, now known as the Wensum Valley Miniature Railway, on a new site at County School station on the Mid-Norfolk Railway – formerly the club was based for some 16 years at the North Norfolk Railway's Holt station, but planned developments there including the erection of the former Reedham Junction signal box and a turntable installation necessitated the move of 12 miles, the club running its first trains at the new site last year.

Meanwhile Gina Pearson, secretary of the **Canterbury and District ME**, has got in touch to let us know that the club is back in full running order after the disruption wrought by Covid, public running sessions on its track in Brett's Quarries at Fordwich near the Kent city every Sunday (weather permitting).

The club is planning an Open Weekend on 2nd-3rd September when Gina tells us members will be looking forward to meeting friends old and new. Anyone wanting further information can contact her at ginapearson@btopenworld.com

At this time of year club newsletters tend to be full of public running reports and members out enjoying the hoped-for sunshine, so it's good to see that build projects are still continuing apace. The latest and always smile-inducing light-hearted newsletter from the **Worthing SME** brings this point home with on facing pages the latest progress on a Merchant Navy 4-6-2 being built by member Geoff Bashall and a Peppercorn A1 under construction by Clive Patten.

Both members are currently dealing with the boilers of their projects, so there's a good reason to put the two reports alongside each other. And both projects look as if they will end up as very high quality models, which reminds me to bang my repetitive drum... if you are taking the time to document your latest build for your club's journal, it's more than likely that we at **EIM** could be interested in showing your work to a wider audience in our pages, and in the process you'll be taking a page or two from whatever is the modern equivalent of the editor's cheque book. Please if you think we might be interested, drop us a line at editor@engineeringinminiature.co.uk

Good to read in the latest *Trackerjack* from the **Teeside Small Gauge Railway** that member John Palmer is keen to encourage junior members by giving them driving lessons on his Sweet Pea locomotive – even though the logistics involved mean that he has basically got to design a new driving trolley, both to ensure he can adequately supervise while sat behind the young member, and to ensure the loco still gets an adequate supply of water. John is continuing his experiments (maybe take a look at the recent efforts by the father-and-son Keningtons in our pages?) which is good to hear – efforts like this to draw in more enthusiastic model engineers help ensure the future of our vocation.

Meccano marvel

Your editor is always trying to remind readers that not all model engineering is steam engines rail or road and encourage submissions of this ilk, so it's good to see the front cover of a recent edition of *From the Smoke Stack*, newsletter of the **Gravesend MMES**, which boasts a truly impressive model of the 'Skywheels' – a fairground amusement that operated at the Festival Gardens in London's Battersea Park in 1951-52.

Gravesend member Peter Thurston built the model, which operates using a 6-volt geared motor in the base and additional gearing at the top of the A-frames. The construction material was entirely Meccano, which is good to see – how many of us were first turned on to engineering by bolting together lumps of Meccano as a child? Don't you feel sorry for the young of today who have to make do with computer games instead of proper interactive toys...

We always like to see the latest updates from clubs outside the UK, though we were also sorry to read in the latest *Maritzburg Matters* newsletter from the **Pietermaritzburg ME** in South Africa that the club suffered a recent break-in with electronic equipment stolen – sadly an ever-present threat to our enjoyment.

More interesting in the newsletter is a listing provided by editor Martin Hampton of Youtube channels with plenty of model engineering interest – the internet generally and social media in particular has mushroomed over past years to the point where these days there is so much 'stuff' available it's very easy to miss something that will be really useful.

It amuses me to think that not long after the turn of the millennium, as a freelance journalist one of my regular gigs was contributing to a long-lost magazine called I*t's on the Net*, which attempted to list the best sites available in a whole range of

subjects, from hobbies to well-being, finance, travel... It was a tough job then involving trawling through loads of chaff to find the wheat – today it would be well-nigh impossible...

Mind you *Maritsburg* editor Martin's comments did make me smile. "The internet is a most valuable resource for any subject you can imagine, but you also have to be a little circumspect, some people out there consider themselves experts but are complete idiots."

Couldn't have put that better myself, especially when he adds his opinion of Facebook.... "where there are a number of interest groups that post some very interesting info. One of the problems that I have found is that there are always some people who think that they know it all, generally these appear to be armchair critics and who you can ignore, unfortunately they bring a bit of a negative attitude that shouldn't taint the subjects under discussion."

In fact there's a whole lot of good philosophy in the Martizburg newsletter this time, perhaps because over there they are heading into winter? Another hugely true quote is taken from TV presenter Ben Fogle emphasising the value of practical skills; "I find it astonishing that in 2023 we are still fixating on exams as the medium of defining peoples' intellectual potential and capabilities. As a philosopher once said, 'everyone is a genius. But if you judge a fish by its ability to climb a tree it will live it's entire life believing that it is stupid.

"Like a fish, some people are better at swimming than climbing. Some people have exceptional ability to retain information and regurgitate it under exam conditions. Others fall apart under pressure."

Never mind the width...

And finally, a little amusement... Every now and then the same old argument breaks out on the 'enthusiast' social media feeds, when someone innocently asks the question, at what track gauge does narrow gauge become miniature? The result is almost always an argument with many having opposing points of view!

This is of course highly relevant to your editor, as my day job involves editing both a narrow gauge and a miniature magazine (as in on miniature subjects, not on small pieces of paper... I'll get my coat). My view is that it is very much a grey area, and to prove it I'm publishing below two very recent photos from my own camera proving that the question will likely never have a finite answer!

The first shows two 15-inch gauge locos at the Perrygrove Railway's Gala on 23rd April. Exmoor Steam Railway built 'Spirit of Adventure' and Cagney 'Soony' are both 15-inch gauge, but as you can see you could easily fit Soony's boiler inside that of Spirit!

It looks even more dramatic when you line up the Perrygrove's newest engine, 'Mr. Hallworth' next to Soony, the newcomer dwarfing the Cagney. Which reminds me, we were supposed to have some thoughts from Perrygrove owner David Nelson-Brown on new loco design in this issue but they got squeezed out, we'll run them next month.

The second shot was squeezed in just as this page was going to press, when your Ed took a couple of hours off to attend an event that gives tech ed Harry annual nightmares, the Fairbourne Railway Gala – we'll have some more views from this always fun event in next month's issue.

The picture shows even more pertinently that track width is by no means the only consideration when considering the narrow gauge/ miniature conundrum. Regular readers will be familiar with the loco in the foreground, 12¼-inch gauge Fairbourne resident loco 'Sherpa'. The loco in the background, clearly much smaller, is the visiting 4-4-2 'Prince Edward of Wales' from the Rhyl Miniature Railway, a loco that started out as a product of Bassett-Lowke and had a very complex history after. It's clearly much smaller than Sherpa, but runs on rails 2¾ inches wider...

Never dull, our vocation. Keep the newsletters coming, they provide essential information on the club and track scene. And if you are organising or attending one of the events taking place in the coming weeks, please send us some photos – we love to see what's going on around the tracks! **EIM**

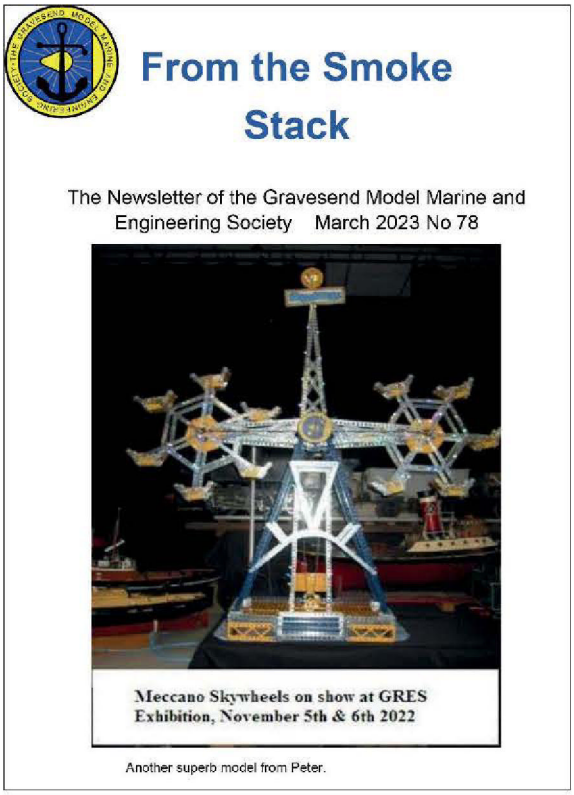

ABOVE: It's Meccano yes, but also impressive engineering...

BELOW: Two shots that muddy the eternal question – narrow gauge or miniature? See the text for details! *Photos: Andrew Charman*

DIARY

EVERY SUNDAY

Bournemouth DSME public running, Littledown Pk, Bournemouth, 11am-3pm (also Wednesdays)

Canterbury & Dist ME public running, Bretts Quarries, Fordwich near Canterbury, 2-4pm

Gravesend MM&E public running, Cascades Leisure Centre, Thong Ln, Gravesend, Kent DA12 4LG, 1-4pm

North Wilts ME public running, Coate Water Country Park, Swindon SN3 6AA, 11am-5pm

Rochdale SMEE public running, Springfield Park, Bolton Rd (A58), Rochdale, pm.

Teeside SGR public running, Preston Hall museum, Stockton-On-Tees, 1-4pm

Wakefield SMEE public running, Thornes Pk, Wakefield WF2 8UD. 1-4.30pm

Welling & District ME public running, Hall Place Park, Bourne Road, Bexley, Kent DA5 1PQ, 12.30-4pm

EVERY TUESDAY

Romney Marsh ME Track Meeting, Rolfe Lane, New Romney, Kent, from 12 noon

EVERY WEDNESDAY

Bromsgrove SME public running, Avoncroft Museum of Historic Buildings, Stoke Heath, Bromsgrove, B60 4JR 11am-3pm

JULY

1 Worthing SME Saturday steam-up, Field Place, Durrington, Worthing

1 Guildford ME Gala, Stoke Park,
2 London Rd, Guildford, Surrey GU1 1TU, 10am-5pm

2 Bradford ME Rae Day Gala, Northcliff Railway, Shipley, BD18 3DD, 2-4pm

2 Bristol SMEE Public running, Ashton Court Railway, BS8 3PX noon-5pm

2 Lincoln ME public running for car boot sale, North Scarle playing field, LN6 9ER, 8am-12pm

2 Rugby ME members running & lunchtime barbecue, Onley Lane, Rugby, CV22 5QD

2 Ryedale SME public running, Pottergate, Gilling East, YO62 4JJ, 12.30-4.30pm

5 Bradford ME meeting, steerage trophy competition, Wibsey Park, BD6 3QD 7.30-10pm

5 Bristol SMEE meeting, talk on tower clocks, Begbrook Social Club, BS16 1HY, 7.30pm. contact secretary@bristolmodelengineers.co.uk

7 Rochdale SMEE meeting, members' projects & bits & pieces, Castleton Community Centre, Manchester Road, Rochdale, 7pm

7 IMLEC efficiency competition at
9 Bristol SMEE, Ashton Court Railway, BS8 3PX noon-5pm

8 Bromsgrove SME public running for
9 Bromsgrove folk Festival, Avoncroft Museum of Historic Buildings, Stoke Heath, Bromsgrove, B60 4JR 11am-3pm

8 Rugby ME Narrow Gauge Weekend,
9 Onley Lane, Rugby, CV22 5QD, from 10am each day

9 Worthing SME public running, Field Place, Durrington, Worthing 2-5pm

13 Worthing SME meeting, Bits & Pieces, Field Place, Durrington, Worthing 7.30pm

15 Ryedale SME Diesel Gala,
16 Pottergate, Gilling East, YO62 4JJ

16 Lincoln ME public running for car boot sale, North Scarle playing field, LN6 9ER, 8am-12pm

16 Rugby ME public running, Onley Lane, Rugby, CV22 5QD1, 1am-1pm, 2-4pm

19 Bristol SMEE meeting, Film of opening of Ashton Court Railway, Begbrook Social Club, BS16 1HY, 7.30pm. contact secretary@bristolmodelengineers.co.uk

21 Rochdale SMEE meeting, models running night, Springfield Park, Bolton Rd (A58), Rochdale, from 5pm

23 Cardiff ME public running, Heath Park, King George V Drive East, Cardiff CF14 4AW, 1-5pm

23 Guildford ME public running, Stoke Park Railway, London Rd, Guildford, Surrey GU1 1TU, 2-5pm

23 Ryedale SME public running, Pottergate, Gilling East, YO62 4JJ, 12.30-4.30pm

23 Worthing SME public running, Field Place, Durrington, Worthing 2-5pm

30 Bristol SMEE Public running day, Ashton Court Railway, BS8 3PX noon-5pm

30 Bromsgrove SME public running, Avoncroft Museum of Historic Buildings, Stoke Heath, Bromsgrove, B60 4JR 11am-3pm

30 High Wycombe ME Public Running, Watchet Lane, Holmer Green, HP15 6UF, 11am-5pm

30 Lincoln ME public running for car boot sale, North Scarle playing field, LN6 9ER, 8am-12pm

30 Ryedale SME public running, Pottergate, Gilling East, YO62 4JJ, 12.30-4.30pm

AUGUST

2 Bradford ME Evening Running & Social, Northcliff Railway, Shipley, BD18 3DD, 7.30-10pm

4 Rochdale SMEE general meeting, Castleton Community Centre, Manchester Road, Rochdale, 7pm

5 Tiverton ME Saturday running at Rackenford track. Contact Chris Catley 01884 798370 (www.tivertonmodelengineering.org.uk)

5 Wakefield SMEE open day, Thornes Pk, Wakefield WF2 8UD. Details from Dennis Halstead (01924 457690) or Phil Owen (01924 466000). 11.30am-6pm

6 Bristol SMEE Public running day, Ashton Court Railway, BS8 3PX noon-5pm

6 Guildford ME Small Model Steam Engine Group open meeting, Stoke Park, London Rd, Guildford, Surrey GU1 1TU, 2-5pm

6 Rugby ME members running, Onley Lane, Rugby, CV22 5QD

6 Ryedale SME public running, Pottergate, Gilling East, YO62 4JJ, 12.30-4.30pm

6 Worthing SME Saturday steam-up, Field Place, Durrington, Worthing

10 Guildford ME public running, Stoke Park Railway, London Rd, Guildford, Surrey GU1 1TU, 10am-1pm

10 Worthing SME meeting, Field Place, Durrington, Worthing 7.30pm

12 Rugby ME Standard Gauge Weekend,
13 Onley Lane, Rugby, CV22 5QD, from 10am each day

13 Lincoln ME public running for car boot sale, North Scarle playing field, LN6 9ER, 8am-12pm

13 Ryedale SME public running, Pottergate, Gilling East, YO62 4JJ, 12.30-4.30pm

13 Worthing SME public running, Field Place, Durrington, Worthing 2-5pm

16 Bristol SMEE meeting, Anything Goes, Begbrook Social Club, BS16 1HY, 7.30pm. contact secretary@bristolmodelengineers.co.uk

18 Rochdale SMEE meeting, quiz, Castleton Community Centre, Manchester Road, Rochdale, 7pm

20 Bradford ME public running, Northcliff Railway, Shipley, BD18 3DD, members from 11.30am, public from 1.30pm

20 Guildford ME public running, Stoke Park Railway, London Rd, Guildford, Surrey GU1 1TU, 2-5pm

20 Rugby ME public running, Onley Lane, Rugby, CV22 5QD, 11am-1pm, 2-4pm

20 Ryedale SME public running, Pottergate, Gilling East, YO62 4JJ, 12.30-4.30pm

20 Tiverton ME Saturday running at Rackenford track. Contact Chris Catley 01884 798370 (www.tivertonmodelengineering.org.uk)

24 Worthing SME meeting, Field Place, Durrington, Worthing 7.30pm

PLEASE NOTE all outside events and public running subject to weather – please check with Society concerned before travelling to an event.

Details for inclusion in this diary must be received at the editorial office (see page 3)at least EIGHT weeks prior to publication. Please ensure that full information is given, including the full address of every event being held. Whilst every possible care is taken in compiling this diary, we cannot accept responsibility for any errors or omissions in these listings.

POLLY MODEL ENGINEERING

Steaming into the future

Under new management

Polly continues to supply the needs of Model Engineers

Following a successful Harrogate Show, Polly is up and running, established in our new premises. We are getting a bit of order into the newly restocked racks and attention is moving to the production of in-house produced items, some of which include the all important safety valves and lubricators which are already back in stock. With our machines now commissioned, it is all systems go!

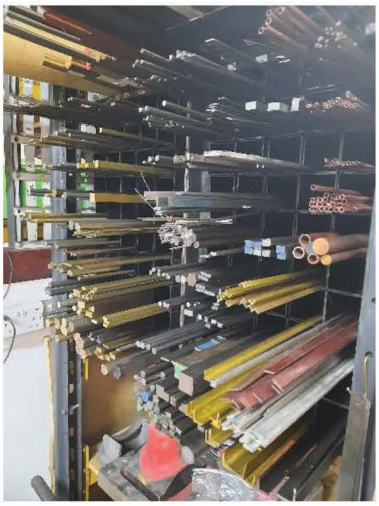

With ample stocks, we welcome your orders by phone, post or email. Please bear with us whilst our new website is being prepared, providing online ordering of all your model engineering requirements.

Note our New Address; other contact details remain the same. For the present, the old Polly catalogue can be downloaded from the website, but some prices may be subject to change.

Polly Model Engineering

Unit 203 Via Gellia Mills Via Gellia Road Bonsall Derbyshire DE4 2AJ

Tel: 0115 9736700 Email: sales@pollymodelengineering.co.uk

www.pollymodelengineering.co.uk

ENGINEERING in Miniature

SUBSCRIPTION OFFER

REASONS TO BE HAPPY

We understand that times are tough so we've put together a ENGINEERING in Miniature subscription offer that will put a smile on your face!

3 issues for £3

- ✓ Only £3.37 an issue
- ✓ 12 issues a year
- ✓ Save over £25
- ✓ FREE delivery

VISIT OUR WEBSITE TO SUBSCRIBE
WWW.WORLD-OF-RAILWAYS.CO.UK/EIMSUB

T&C'S: UK offer only. Following your first 3 issues your subscription changes to just £12.49 per quarter by Direct Debit. Minimum term of 1 year.

Tracy Tools Ltd

Model Engineering Supplies

We ship anywhere in the world

Visit our website:

www.tracytools.com

PRODUCTS

- Taps and Dies
- Centre Drills
- Clearance Bargains
- Diestocks
- Drill sets (HSS) boxed
- Drills
- Drills set (loose) HS
- Endmills
- Lathe Tooling
- Reamers
- Slot Drills
- Specials
- Tailstock Die Holder
- Tap Wrenches
- Thread Chasers

Acme Taps

Taper Shank Drills HSS

Reamer

Taps & Dies

UNIT 1, PARKFIELD UNITS, BARTON HILL WAY, TORQUAY, TQ2 8JG

Tracy Tools Ltd

Tap & Die Specialist, Engineer Tool Supplies

Tel: 01803 328 603

Fax: 01803 328 157

Email: info@tracytools.com

www.tracytools.com

CMD ENGINEERING

MINIATURE RAILWAY SUPPLIERS

LOCOMOTIVES, ROLLING STOCK, BOGIES AND ACCESSORIES

WWW.MINIATURE-TRAINS.CO.UK

FACEBOOK.COM/CMDENGINEERING

01634 888621/07944 126 687

PNP Railways

TRACK WORK

3½" | 5" | 7¼" Gauge

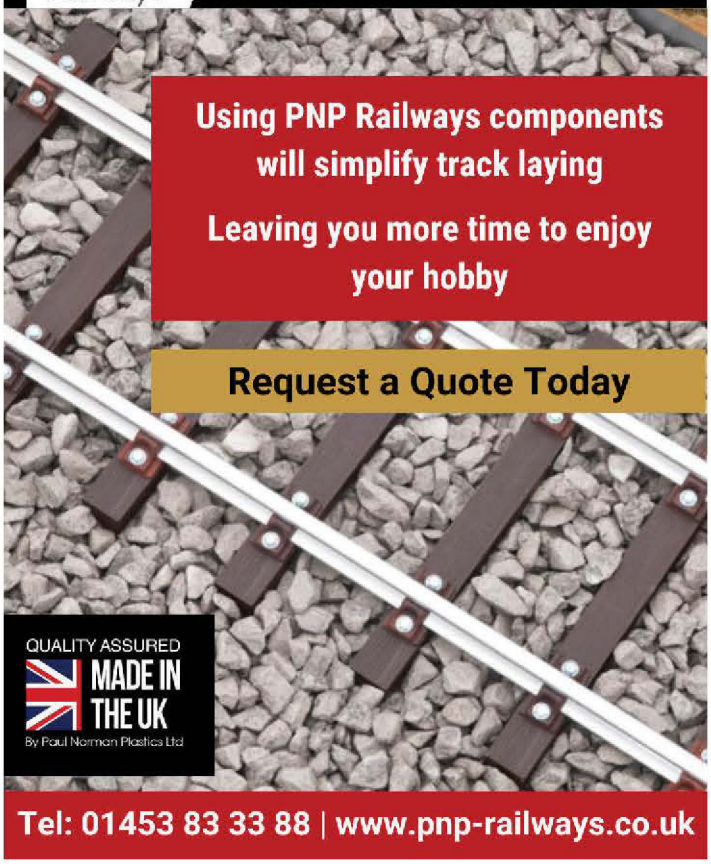

Using PNP Railways components will simplify track laying

Leaving you more time to enjoy your hobby

Request a Quote Today

QUALITY ASSURED MADE IN THE UK

By Paul Norman Plastics Ltd

Tel: 01453 83 33 88 | www.pnp-railways.co.uk

Steamways Engineering Ltd

WORKING LIVE STEAM SCALE MODELS, SPECIALIST PARTS MANUFACTURE. PRE-MACHINED KITS FOR WORKING STEAM LOCOMOTIVES IN 5" AND 7¼" GAUGES

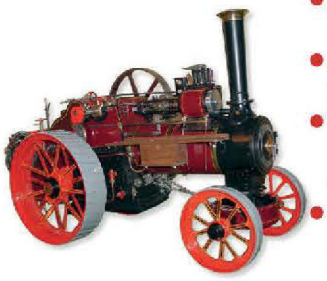

- BESPOKE PARTS MACHINING
- STATIONARY AND MARINE ENGINES MANUFACTURED
- FULL PAINTING & LINING SERVICE
- EC COMPLIANT BOILERS FOR SALE
- UNFINISHED MODELS COMPLETED

ALL MAJOR CREDIT AND DEBIT CARDS ACCEPTED

STEAMWAYS ENGINEERING LTD
Dovecote House, Main Road, Maltby Le Marsh, Alford, Lincs, LN13 0JP
Tel/Fax: 01507 206040
Email: info@steamwaysengineering.co.uk

www.SteamwaysEngineering.co.uk

WORLD OF RAILWAYS PLUS

Only £5.99 a month

The digital membership worth

£3,500

- ✓ 800+ digital magazines! **Worth £3,200**
- ✓ 52 new issues every year! **Worth £285**
- ✓ 71 Exclusive videos
- ✓ FREE show ticket each year! **Worth £15**
- ✓ 12 months of RMweb Gold membership
- ✓ 20 annual competitions
- ✓ And lots more added every month!

You get all of these magazines:

PLUS a free show ticket of your choice

THE LONDON FESTIVAL OF RAILWAY MODELLING
THE FESTIVAL OF BRITISH RAILWAY MODELLING
BRISTOL MODEL RAILWAY EXHIBITION

Don't miss out! Visit our website and join today:
www.world-of-railways.co.uk/membership

T&C'S: £5.99 monthly direct debit. One free Warners show ticket a year.

LEADING SPECIALIST SUPPLIER AND PUBLISHER OF TECHNICAL AND MODELLING BOOKS FOR THE MODEL ENGINEER AND MODELLER WORLDWIDE FOR OVER 60 YEARS

TEE Publishing Ltd

Are you looking for a book which may have gone out of print? We can help! We have over 1000 second hand books ranging from aviation to model railways, visit our website to see if we have the book for you!

W: www.teepublishing.co.uk **T:** 01926 614101

DREWEATTS
EST. 1759

INVITING ENTRIES | THE TRANSPORT SALE | 13 DECEMBER 2023

A fine exhibition quality model of a 5 inch gauge Britannia Class live steam 4-6-2 locomotive and tender No 70012 'John O'Gaunt'. Built by the late famous and award winning locomotive builder Mr John Adams of Poole

Est. £20,000-25,000 (+ fees)

AUCTION LOCATION
Dreweatts
Donnington Priory
Newbury
Berkshire RG14 2JE

ENQUIRIES
Michael Matthews
+44 (0) 7858 363064
mmatthews@dreweatts.com

dreweatts.com

A.M.E 01952 879607
Abbots Model Engineering
Makers of fine 5" & 7¼" Gauge Locomotives & Rolling Stock
See Website for up to date info.
Please re-fresh your website browser.

"ALL NEW"
4Hp, 3000Watts
Excalibur II
Sit-in battery locomotive
Chain drive,
Disc braking,
Powerful regen braking,
2Hp from £8495
4Hp from £8995

Unit D7, Haybrook Ind Est, Halesfield 9, Telford, Tf7 4QW

Shop open Mon to Fri 9.00am to 4.00pm
Locomotives, Coaches & Trucks all on display

www.ametrains.co.uk

UK MANUFACTURES OF LIVE STEAM LOCOMOTIVE KITS IN GAUGE 1 & 3
Coal, spirit, or static

BARRETT STEAM MODELS LTD.

LMS JUBILEE kit for Gauge 1

Check out our website for more locomotive kits
www.barrettsteammodels.co.uk Tel no. 01922 685889
The Old Exchange,47a Coronation Rd, Pelsall, Walsall, WS4 1BG

NOGGIN END METALS

(+44) 07375 958713
Www.nogginend.com

We supply a wide range of metals and engineering plastics in small quantities for model engineering. Including Brass, Aluminum, Cast Iron, Bronze, Copper, Steel, Stainless Steel, Nickel Silver, Gilding Metal, Nylon, PTFE, Peek and Fluorosint.

EIM Boiler Metal Pack £146.95

MAXITRAK.COM
The best of model rail and road
OVER 40 YEARS EXPERIENCE

5" Gauge J94 Austerity
Painted Kit from
£5,150
Ready to Run from
£6,175
Option for TIG Welded Boiler

5" Planet
Painted Kit
£1,395
Ready to Run
£1,495

3/4" Allchin
£1,295

3/4" Sentinel DG6
Lorry £1,515

10 /11 Larkstore Park, Lodge Road, Staplehurst, Kent,
TN12 0QY Tel : 01580 893030 Email : info@maxitrak.com

TEE Publishing Ltd

STOCKISTS OF A WIDE RANGE OF BOOKS FOR MODELLERS AND MODEL ENGINEERS

W: www.teepublishing.co.uk
T: 01926 614101 E: info@teepublishing.co.uk

ModelFixings.co.uk
also the home of ModelBearings.co.uk

ALWAYS IN STOCK:
Huge range of miniature fasteners, including self tappers from No O Gauge.

- Taps, Dies & Drills
- Miniature Bearings
- Adhesives & Tools
- Circlips
- E-Clips
- Starlocks
- Brass & Aluminium Sections

EST. 2003 Fast mail order service

Tel: +44 (0)115 854 8791
Email: info@modelfixings.com

webuyanyworkshop.com

Home workshops cleared, good prices paid, especially for those with either Myford 7 or 10 lathes.

Send your photos to andrew@webuyanyworkshop.com
Or call me on 07918 145419

I am also interested in buying Polly steam locomotives, especially those that need some 'TLC'

HORLEY MINIATURE LOCOMOTIVES

7¼" Drawings and castings
Dock tank
BR STD Class 2 2-6-0
BR STD Class 2 2-6-2T
BR STD Class 4 2-6-4T
BR STD Class 5 4-6-0
BR STD Class 7 4-6-2
BR STD Class 9 2-10-0
L.M.S. Coronation Class 8 4-6-2 (Duchess)

5" Castings only
Ashford. Stratford. Waverley.

7¼" Castings only
Dart, Roedeer. Green Queen

HORLEY MINIATURE LOCOMOTIVES LLP
Phone: 01293 535959 E-mail: hml95@btinternet.com
www.horleyminiaturelocomotives.com

www.world-of-railways.co.uk

Meccano Spares
Reproduction & Original Meccano Parts.
www.meccanospares.com
Tel: 01299 660 097

TO ADVERTISE HERE
CALL SARAH ON
01778 392055

Tiggy Engineering & Aviation
Laser cutting
Do you need very fine marking or cutting, Boiler name Plate ?
Variety of Material thickness Brass, Steel, Copper and may other materials with minimum font heights less than 0.2mm !
Call Mike to discuss :
Tel: 07738 271770

AP MODEL ENGINEERING
INCORPORATING MODEL ENGINEERING PRODUCTS, BEXHILL
T: 07811 768382
E: apmodelengineering@gmail.com
AP Model Engineering supplies the largest range of battery electric diesel outline ready-to-run locomotives, locomotive kits, riding cars, rolling stock and accessories in 5" scale, 7¼" scale and 3½" scale. Quality products at affordable prices!
www.apmodelengineering.co.uk

MJ ENGINEERING
Drawings and Castings for Model Traction Engines Locomotives and Model Engineering Supplies

2" scale Burrell Gold Medal
2" scale Burrell 10 Ton Roller
7 1/4" Bagnall NG Loco

2&3" Scale Fowler A7 Traction Engine

3" Scale Wallis & Steevens 8HP

Pre-owned
We always have a stock of models and workshop equipment to sell. Check our web site regularly.

Colour Catalogue – send £3.50
Includes all our range of Traction Engines and Locomotives, Steam Fittings, Nuts, Bolts, Rivets, Materials.

Machining and Gear Cutting Services

2, 3 & 4" Scale Traction Engine Lamps

Rubber Tyres

Schoolfield Corner, Church Lane, Dogmersfield, Hampshire, RG27 8SY - Visitors by appointment only
Tel: 01252 890777 email: sales@mjeng.co.uk web: www.mjeng.co.uk

ADVERTISERS' INDEX

ABBOTS MODEL ENGINEERING 49
AMADEAL 4
AP MODEL ENGINEERING 50
BARRETT STEAM MODELS 49
CMD ENGINEERING 47
DREWEATTS & BLOOMSBURY 49
HOME & WORKSHOP MACHINERY 52
HORLEY MINIATURE LOCOMOTIVES 50
MAXITRAK 49
MECCANO SPARES 50
MJ ENGINEERING 50
MODEL FIXINGS 50
NOGGIN ENDS METALS 49
PAUL NORMAN PLASTICS 47
POLLY MODEL ENGINEERING 45
SILVER CREST MODELS 5
STATION ROAD STEAM 51
STEAMWAYS ENGINEERING 48
STUART MODELS 2
TEE PUBLISHING 48,50
TIGGY ENGINEERING 50
TRACEY TOOLS 47
WE BUY ANY WORKSHOP 50

STATION ROAD STEAM

ENGINEERS · LINCOLN · LOCOMOTIVE BUILDERS · BOILERMAKERS

Full-size and miniature engines of all types bought, sold and part-exchanged

We keep a large, constantly-changing stock of second-hand engines in all scales and gauges.
We are always interested in buying engines - from part-built through to exhibition-winning models.

7 1/4 INCH GAUGE GWR 14XX 0-4-2T

A well-built 7 1/4 inch gauge GWR 14XX 0-4-2T to Martin Evans' "Dart" design, with commercially-built CE-marked boiler by GB Boilers. Motionwork and valve gear is to a high standard, fit and finish of machined parts is very good. Platework is neatly formed and riveted, paintwork was originally done to a good standard and remains bright, with minor wear in places consistent with use. The engine has been serviced in our workshop, which included fitting a new set of drain cocks. The boiler has had hydraulic and steam tests with new certification issued.

It's a free-steaming locomotive that runs well, with crisp, square exhaust beats and a good reserve of power under the regulator. There's some video of it running on our YouTube channel.

Stock Code 11091 £10,500

5 INCH GAUGE "CLAUD HAMILTON" 4-6-0

A particularly well-made 5 inch gauge "Claud Hamilton" 4-4-0 in LNER livery - new and unsteamed it has been on display for many years. Fit and finish of machined parts is to a high standard, the platework is neatly formed and well fitted. Paintwork was well-applied in the first place and remains in excellent condition. We love the details on this one, including the lovely guide bar and crosshead oilers, taper-pinned motion-work, screw reverser with locking catch, dummy lubricator mounted on the offside and finely formed pipework. The boiler had had a twice working pressure hydraulic test and appears leak free and free from distortion - we would warranty as sound. The engine runs well on air in either direction, there's some video of it on the rolling road on our YouTube channel here.

Stock Code 11144 £8,500

5 INCH GAUGE BR STANDARD CLASS 4 TANK

We sold this one in 2021 having bought it back from the man we first sold it to in 2010. It subsequently went to a long time customer, a prolific and highly capable model engineer who bought the engine simply to display and admire - it's remained unsteamed since it was last with us. A finely made locomotive, completed in 1992 it still runs beautifully. Paint is on the good side of "working clothes", which suits the engine, the chassis remains in good order throughout

A well-known, bordering on legendary design, it quickly got a reputation as being complex and difficult to build, something of a "Mount Everest" of model engineering. Consequently, whilst a good number have been started over the years, very few have been completed - even fewer that run as well as this one.

Stock Code 9756 £18,500

3 1/2 INCH GAUGE LARGE-BOILERED "TICH" 0-4-0T

A 3 1/2 inch gauge "Tich" to the LBSC design, in large-boiler, Walschaerts gear form. Free to turn over, it runs on air in both directions. We have no previous history for the boiler - it's silver soldered with nutted and calked firebox stays, several of which leak and will require recalking.

Stock Code 10947 £875

3 1/2 INCH GAUGE LMS "JINTY" 0-6-0T

A 3 1/2 inch gauge LMS "Jinty" 0-6-0T, originally rather a well made engine turned out in lined black livery. In recent times it's had what appears to be a cosmetic "restoration" which included painting the backhead and fittings silver (apparently with a tar brush). The copper boiler appeared dry and free of distortion on hydraulic test, although the regulator and blower valve both leak copiously - we would warranty as sound once the leaky valves have been attended to. **Stock Code 10172 £1,750**

We are always interested in acquiring engines. If you know of a steam engine for sale, in any condition and any part of the world, please let us know. We buy outright, and pay by cheque or bank transfer within 7 days of collection.

All engines listed are on our premises and available for inspection by appointment.

For full details, high resolution photographs and video see our website
Unit 16-17 Moorlands Trading Estate, Metheringham, Lincolnshire LN4 3HX

Email: info@stationroadsteam.com www.stationroadsteam.com Tel: 01526 328772

HOME AND WORKSHOP MACHINERY

144 Maidstone Road, Foots Cray, Sidcup, Kent, DA14 5HS
Tel: 020 8300 9070 - evenings 01959 532199
website: www.homeandworkshop.co.uk
email: sales@homeandworkshop.co.uk
visit our eBay store! Over 7000 items available; link on website;
homeandworkshopmachinery

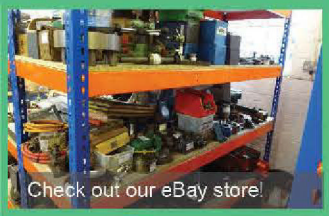
Check out our eBay store!

Colchester Bantam 2000 lathe (long bed) metric leadscrew, Dickson post £4950

Stanley precision vice 55mm jaw New / New Zealand £195

Jet JWL 1442, 14" swing wood lathe x 42"centres, 240 volts £1000

Harrison M250 lathe 5" x 20" 240 VOLTS FROM NEW £5450

3 1/2" Britannia class 4-6-2 rolling chassis and castings + completed tender and part built cab, modelled on 70054 Dornoch Firth (LSBC) check out our website for more pictures £1150

X-Y 12" x 6" table £525

Myford Super 7B Gearbox, power cross feed £3450

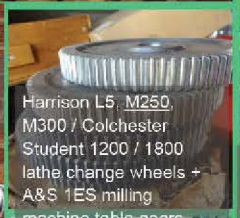
Harrison L5, M250, M300 / Colchester Student 1200 / 1800 lathe change wheels + A&S 1ES milling machine table gears

Startrite 24 V 10 + welder bandsaw, nice £1750

Wadkin wood lathe 6" centre height x 32" centres + 14" rear face plate on the rear end + 6 3/4" 3 jaw chuck £1150

Toggle presses from £145

Transwave 4HP & 5.5HP Rotary converter £750 / £850

Boxford dividing head £2000 like new

Elliot table 12" x 4 1/4" high £500

Meddings L1 MK.V drilling machine £2250

Hobbymat MD65 lathe 2 1/2" x 12" centres, 5" swing over bed + tools £500

Creuson Morrisflex 240V 8" polisher buffers £825 each

Harrison Graduate wood lathe £1450

Clarke 917 vacuum former £495

Myford 3/4HP 240V resilient mount motor configurated to match a Dewhurst reversing switch already wired + instructions £226

Trugrip collets metric £35 Imperial £30, Marlco 2820 £15 each

Chester Cub 630 6" x 30" centres chucks, steadies hardly used £2950

DP / MOD gear cutters £20 each please enquire Hundreds in stock!

Colchester Bantam 1600 lathe £1500

RJH Bison 10" pedestal grinder complete with light £450

HME Hearth just arrived from education 3PH / mains gas £500

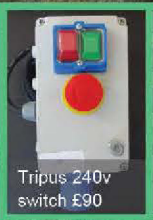
Tripus 240v switch £90

Myford bridge & rifle felts £6.75

Norton Deep throat No.6DB fly-press 12" throat x 9" height £950
FLYPRESS PUNCHES AVAILABLE

Crown Windley Brothers 6ft x 4ft cast iron surface table £1425

Smart and Brown Sabel lathe £950

ANGLE PLATES, BOX CUBES, VICES, LATHE ACCESSORIES!

Myford gearbox unused £1000

Harrison M300 lathe £3950

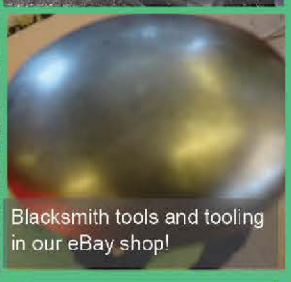
Blacksmith tools and tooling in our eBay shop!

Neat cut and soluble cutting oils £10 each

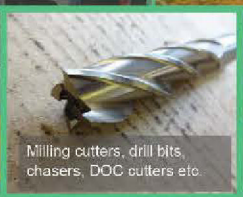
Milling cutters, drill bits, chasers, DOC cutters etc.

Sedgewick 10" planer thicknesser 240V and 3PH £1150 each

Books and manuals in our eBay shop from £6.00

Please phone 0208 300 9070 to check availability.
Distance no problem – Definitely worth a visit – prices exclusive of VAT
Just a small selection of our current stock photographed!

Worldwide Shipping

barclaycard