The Woodworker's Journal

Vol. 13, No. 5 $3.50

Included in this issue: **Chippendale Small Chest • Pencil Box Oak Globe Stand • Ice Chest • Stacking Desk Trays Country Bake-Room Table • Apple Door Stop**

09
73361 64856 3

September/October 1989

Trend-lines™ SUPER SALE!

15 PC. FORSTNER BIT SET

Made In West Germany
Create extremely clean, flat bottom holes in thin veneers or through end grain and knots. Sizes 1/4" to 2", 3 1/2" long with a 3/8" shank. Come in a sturdy wooden case.
YYFB15PRT
$99.95

RELIANT 12 1/2" PLANER

Powerful planer is totally portable, with a 2 H.P. motor that lets you handle workpieces up to 12 1/2" wide and 6" thick. Makes 16,500 cuts per minute. Stand not included!
NN912P
$339.95

NN912S	Planer Stand	**$39.95**
NN913	Dust Chute	**19.95**
NN914	Spare Blade Set	**24.95**

15 PC. ROUTER BIT SET

1/4" shank tungsten carbide bits really can take the heat. Includes rabbeting, chamfering, laminate, roman ogee, cove, roundover, dovetail, vee groove, combination panel, 3 straight, mortising, flush trim, and bevel trim bits.
DPARB151
$99.95

12 PC. ROUTER BIT SET

1/2" shank, carbide tipped bits, in a hardwood case. Includes 3 straight bits, & a core box, vee groove, dovetail, cove, rabbeting, roundover, roman ogee, 45° chamfer, and flush trim with bearing.
AV2025
$99.95

22 PC. BRAD POINT SET

Brad point set has 11 bits from 1/8" to 1", and 11 Adjustable locking collars let you drill to an exact depth. Brad point feature prevents walking or slippage. 1/8"- 1/2" have 1/4" shanks. 5/8"-1" have 3/8" shank. **YY22**
$29.95

RELIANT 1" X 42" BELT SANDER

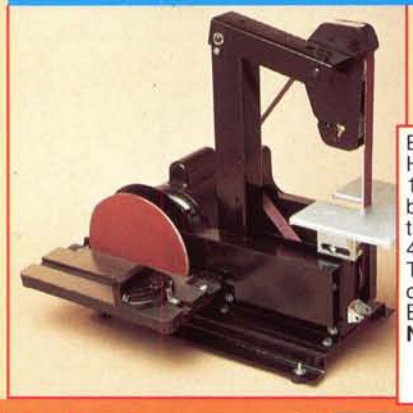

Built rugged, with a 1/2 H.P. motor giving you 1720 RPM of smooth belt or disc sanding. 7" throat. Belt size is 1" x 42". Disc size is 8". Table adjusts 45°, or can be removed totally. Belts available.
NNSG1
$129.95

Order Toll Free, 24 Hrs. A Day:
800-343-3248! *ASK FOR DEPT. WJSO9*

1-Year Limited Warranty On All Items.

OR SEND YOUR ORDER TO:

Trend-lines™ Dept. WJSO9
375 Beacham St., Box 6447, Chelsea, MA 02150
ADD $4.00 SHIPPING AND HANDLING REGARDLESS OF HOW MANY ITEMS YOU ORDER.

MasterCard VISA DISCOVER

MONEY BACK GUARANTEE
Examine any item in your home or shop for 30 days. Return merchandise for a complete merchandise refund or exchange.

The Woodworker's Journal

SEPTEMBER/OCTOBER 1989 VOLUME 13, NUMBER 5

CONTENTS

Editor and Publisher
James J. McQuillan

Managing Editor
Thomas G. Begnal

Associate Editor
David F. Peters

Staff Editor
Thomas Clark

Art Director
Dan Thornton

Illustration/Page Design
Michael Gellatly
Maria Meleschnig

Craftsman
Mark J. Ziobro

Circulation/Promotion
Lynne Streeter, *Manager*
JoAnne Finkle, *Subscriptions*
Patricia Malumphy, *Distribution*
Maureen A. Murphy, *Subscriptions*

Computer Operations
Kathy Shook, *Supervisor*

Advertising Manager
Kimberly Gellatly

Production Manager
Jane Manley

Office
Patricia McLean, *Manager*
Lynda Morris, *Assistant*

Administrative Assistant
Marie E. McQuillan

Photography
John Kane/Silver Sun Studios

The Woodworker's Journal (ISSN 0199-1892) is published bi-monthly in January, March, May, July, September and November by The Madrigal Publishing Co., Inc., P.O. Box 1629, New Milford, CT 06776. Telephone: (203) 355-2694.

Copyright 1989 by The Madrigal Publishing Co., Inc. No part of this publication may be reproduced by any method without permission from the publisher.

Second class postage paid at New Milford, CT 06776 and additional offices.

Subscription Rates: In the United States and its possessions — One year (6 issues) $15.00, Two years (12 issues) $26.00. Canada — One year $24.95 (CAD), Two years $42.95 (CAD). Foreign countries — One year $20.00 (USD), Two years $35.00 (USD).

To Subscribe, Renew or Change Address: Write to **The Woodworker's Journal,** P.O. Box 1629, New Milford, CT 06776, including mailing label for renewals and changes. For gift subscriptions, include your own name and address as well as those of gift recipients.

Postmaster: Send Change of Address to **The Woodworker's Journal,** P.O. Box 1629, New Milford, CT 06776.

Contributions: We welcome contributions in the form of manuscripts, drawings and photographs and will be glad to consider such for possible publication. Contributors should include a stamped, self-addressed envelope of suitable size with each submission. While we cannot assume responsibility for loss or damage, all materials will be treated with care while in our possession. Payment for the use of unsolicited material will be made upon acceptance. Address all contributions to: *Editor,* **The Woodworker's Journal,** P.O. Box 1629, New Milford, CT 06776.

U.S.A. Newsstand Distribution by Eastern News Distributors, Inc., 1130 Cleveland Rd., Sandusky, OH 44870.

DEPARTMENTS

4 Shoptalk

6 Letters

9 Readers' Information Exchange

11 Product News

15 Cabinetmakers' Supplies
Clock Parts Suppliers

17 Events

20 In The Shop
The Table Saw: Basic Adjustments

23 Woodworking Basics
Cutting Full-Blind Dovetails

26 Special Techniques
Marquetry: The Pad Method

30 Finishing
Marbleizing: Creating a Faux-Marble Finish on Wood

46 Gift Shop

66 Shop Tips

FEATURES

18 Mount Lebanon Shaker Village
A Museum in the Making

32 Tool Review
Shop Test: Four Portable Planers

PROJECTS

35 Oak Globe Stand

38 Country Bake-Room Table

42 Chippendale Small Chest

46 Stacking Desk Trays

48 Pencil Box

50 Apple Doorstop

52 Space Shuttle Toy

56 Marquetry Coasters

58 Ice Chest with Marbleized Top

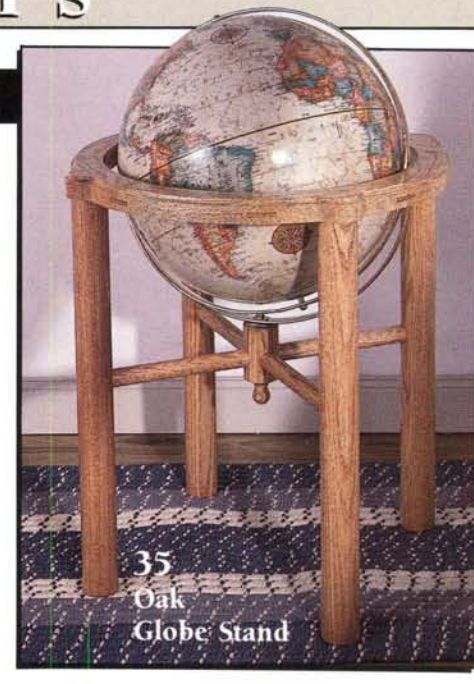

35
Oak
Globe Stand

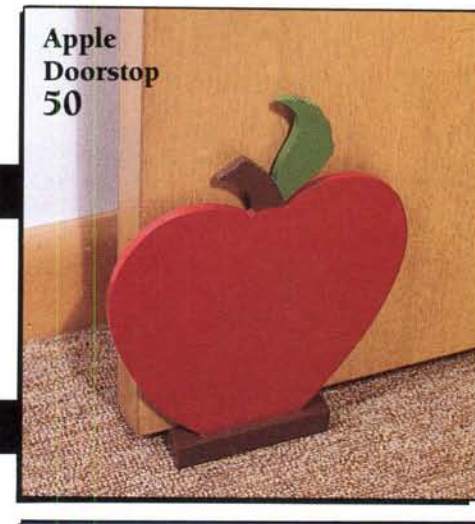

Apple
Doorstop
50

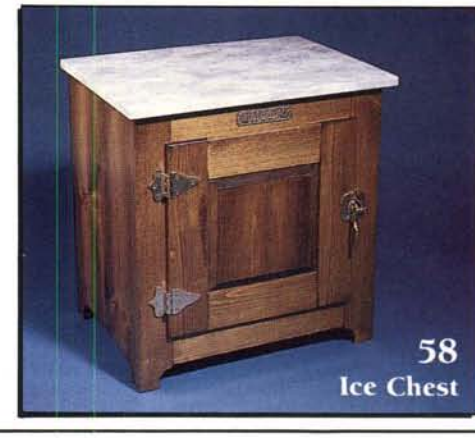

58
Ice Chest

Shoptalk

Publisher's Note: In the spring of 1970, an exciting event took place across the country when a day was set aside to celebrate this precious planet of ours. How many of you remember Earth Day and the bright promises it implied?

It was then that a movement to clean up and protect our environment finally began to gain momentum. Now, 19 years later, although much has been accomplished, we find ourselves facing worldwide environmental problems far more serious than we could have ever imagined in 1970.

In his preface to the Popular Science Woodworking Projects 1989 Yearbook, *published by Grolier Book Clubs, Inc., woodworking author Nick Engler has addressed a series of environmental problems which are of vital concern not only to woodworkers but to all the inhabitants of our beleaguered planet.*

Mr. Engler has done a great service by helping to bring these problems into focus, and he offers some suggestions as to how each of us can join in a collective effort to bring to a halt the degradation of our world. Please take that important first step by writing for more information to Global ReLeaf, American Forestry Association, P.O. Box 2000, Dept. GR2, Washington, DC 20013. We are indebted to Popular Science Books and to Nick Engler for their permission to reprint the following.

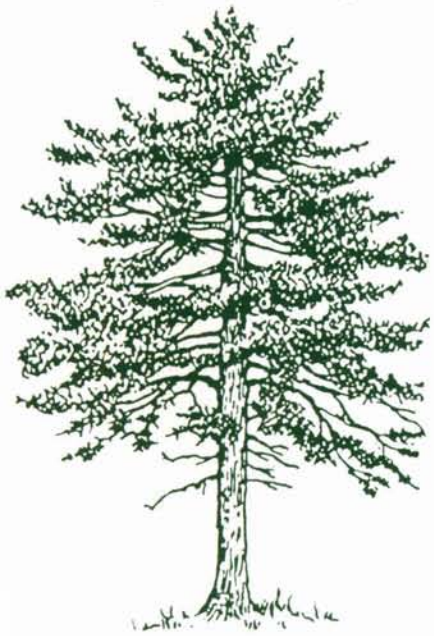

Please don't think of this as yet another doom-and-gloom lecture from a born-again environmentalist. I'm just a woodworker who prizes his lumber. Like many woodworkers that I know, I've noticed that it's becoming more difficult to find specific types of lumber. The wood is not just expensive to purchase, it's also getting *hard to find.* The reason for this increasing scarcity is complex, more complex than I have room to explain completely. But I'll give you a general picture. There are several factors at work:

Greenhouse Effect — As you've heard many times, the global climate is warming due to increased amounts of carbon dioxide in the atmosphere. This is the by-product of burning fossil fuels for nearly 200 years. The speed with which the climate is warming is having an adverse effect on many trees. Trees can normally survive shifts in climate by adapting or moving. Antarctica, for example, used to be covered with trees. The temperature dropped and the trees moved north to warmer parts. But this happened over millions of years. The greenhouse effect may change the climate over a few decades. Trees cannot adapt to the heat or move to cooler regions that quickly. Entire forests are in danger, and there may be mass extinctions of many wood species.

Acid Rain — It is not clear how acid rain affects trees. One prevalent theory is that the increased acidity from air pollution releases harmful minerals in the soil that, in turn, destroy the trees' immune system. This makes the trees more susceptible to disease, pests, droughts, and changes in the environment. Whatever the specifics, most botanists agree there is a correlation between acid rain and tree kills. The West Germans think that acid rain is destroying the vast Black Forest. Since the late 1940's, over 70 percent of these German trees have died. Now, the same thing is happening to the hardwood forests of the Eastern United States and Canada.

Overuse — During this century, for the first time in the history of the planet, we have used more wood than we have grown. Trees are remarkably useful beings, and we find more uses for them with each new technological advance. Vast rain forests in South America have been stripped bare and the wood sent to industrial nations to be turned into paper, building materials, and other products. Some botanists calculate that we would have to replant an area somewhere on this planet equivalent to the size of Texas with trees, just so that once again our forests would grow as fast as we are *presently* cutting them down. But as our population and industrialization increases, so does the rate with which we are using up trees. Soon we may have to replant areas equivalent to the size of Alaska, then Siberia, then . . . .

At this point, many of us are tempted to say, "What can one person do?" and throw up our hands. I used to do that, but I can't anymore. My mind changed when several local lumberyards began to experience shortages of ordinary woods that I love to work with. Recently, for example, I was unable to find any 8/4 oak for several weeks — and I live a stone's throw from an area that used to boast the largest oak forest on the continent.

If you think about it, there are *two* important things that one person can do: First, you can become *informed.* As I said, this is just the broad-brush; the problem is very complicated. Detailed information is available from various media, but you have to watch, listen, read — and think. Only when you have enough information can you decide how to solve the problem. This information also helps you accept the changes and sacrifices that have to be made to effect a solution.

Second, you can *support* solutions that are consistent with your informed decisions. Legislators, political action committees, and various organizations are constantly proposing new courses of environmental action. You can help expedite those proposals that make sense to you with your votes, donations, and time.

This may seem too obvious and too little, given the magnitude of the problem. But it can be enough, provided other like-minded woodworkers and tree-users join the brigade. No one of us can replant a Texas-sized forest. But if we take responsibilty for a few trees — in other words, do just a little — then the task becomes possible.

Free Subscription to Woodworking Catalog

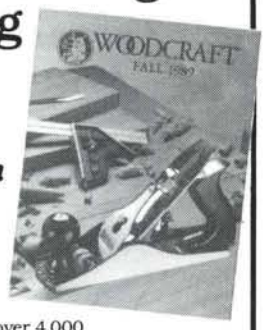

Call for yours today!
Our new 120 page, full-color catalog is here for your browsing pleasure. And it's packed with over 4,000 new and best-selling woodworking tools, supplies, kits & books.

Our advice is free, too!
Wondering what jig is right for you? Which dovetail angle to use? What bushing goes with what jig? Our expert technical reps are just a free phone call away. Call them today! It's all part of the service you can expect from Woodcraft.

Call free **1-800-225-1153**

Or write to:

WOODCRAFT
Dept WJ99, Wood County Park #210
P.O. Box 1686, Parkersburg, WV 26101

Satinwood Products

EASY-ONE-STEP

TOUCH-UP KIT

FURNITURE
CABINETS
DOORS

- Permanent, invisible repairs
- Assorted colors for a perfect match
- Easy to use brush in each bottle

THE BEST WOOD TOUCH-UP EVER DEVELOPED OR YOUR MONEY BACK

Send $9.95 plus $2.00 shipping to:

Satinwood Products
9612 Kent Street
P.O. Box 1387
Elk Grove, CA 95759

CALIFORNIA RESIDENTS ADD SALES TAX

INTRODUCING

PARA GAUGE™

The woodworker's solution to accurately producing straight and parallel measurements while setting a table or radial arm saw.

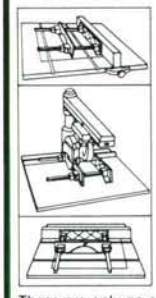

Use Para Gauge as a setting guide *for parallel alignment of a rip fence to saw blade and for squaring the saw blade to the work table.*

Accurately measures distances *from 5/16ths to 10 inches in length and up to 2-1/2 inches in height.*

Improves the safety factor *by reducing work piece kick back because of binding which occurs when a saw blade and rip fence are not parallel.*

These are only an example of the many uses for ***Para Gauge***. For more information write for a free brochure or:

To order yours at the special introductory price of $29.95 (plus $3.50 shipping per order) call our order desk at **1-800-343-6129** or mail your payment along with your name and address to:

ACCUSET TOOL CO. INC.
P.O. Box 1088 Dept. J
Troy, Michigan 48099

Charge your purchase using Visa or Mastercard by providing card type, A/C #, expiration date, telephone # and signature. No C.O.D. orders please. Michigan residents add 4% sales tax.

Special Limited Offer - Expires Oct. 31, 1989

FORSTNER BITS: WHAT THEY CAN DO FOR YOU WHY OURS ARE BEST AND LEAST EXPENSIVE

Forstners, the only wood bits that can:

- Bore any arc of a circle at any angle
- Make entry holes in veneer, end grain, and knots
- Leave glass smooth walls and a flat bottom hole

Pros use them:

- For starting rabbets or grooves
- To make pocket holes to attach rails to tops, and rods, spindles and stretchers to legs
- To make blind holes for plugs and
- Through holes for locks

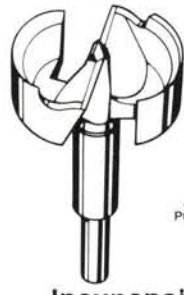

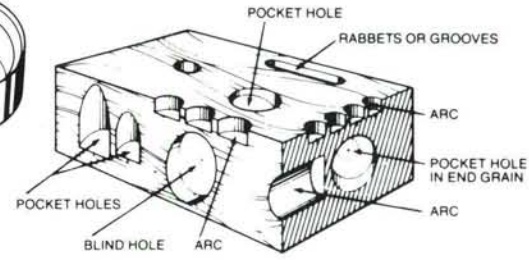

Best Because:

- Machined from high-carbon alloy steel
- Precision ground cutting edges, lifters and brads
- Hardened to HRC 50
- Mirror polished head to maintain splinter free entry holes

Inexpensive Because:

- Manufactured in China where the US dollar is still king
- Imported directly by us
- Our sincere desire to bring back sensible prices for woodworking tools

SPECIAL INTRODUCTORY OFFERS

BUY A 7-pc FORSTNER BIT SET (1/4, 3/8, 1/2, 5/8, 3/4, 7/8, 1") and we will give you FREE a 7-pc Brad Point Drill Set, a $12.00 value.
Ship./Hndl. $4.50
ORDER #10-1426 only **$34.99**

BUY A 16-pc FORSTNER BIT SET (1/4, 3/8, 1/2, 5/8, 3/4, 7/8, 1, 1-1/8, 1-1/4, 1-3/8, 1-1/2, 1-5/8, 1-3/4, 1-7/8, 2, 2-1/8") and we will give you FREE a 25-pc Brad Point Drill Set in Metal Index, a $29.95 value. Ship./Hndl. $9.50
ORDER #10-1441 only **$124.99**

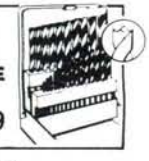

All Forstner Bits fit 3/8" chucks and are 3-5/8" overall. FOR A FREE PRICE LIST OF INDIVIDUAL SIZES, SEND NAME AND ADDRESS TO: **P.O. BOX 964, RIDGEFIELD, CT 06877**

CALL TOLL FREE: 800-447-7770 • VISA / MC / AMEX
Dollar Trading Corp. (Est. 1953) • Dept.WJ09C• P.O. BOX 8433 • GRAND RAPIDS, MI 49518
MI and CT Buyers, Please Add Sales Tax • 90 Day, Hassle-Free, Money Back Guarantee

Letters

In your July/August 1989 issue, I found the article "Coping with your Radial-Arm Saw" very interesting. I have been using my saw since 1981 and I have found that by observing all the procedures you recommend, I have had none of the inaccuracy many woodworkers claim for the radial-arm saw. I installed a ¾ in. thick plywood surface over the particleboard table and found it much more satisfactory than the ⅜ in. thick plywood recommended by the manufacturer.

Harold Nachlin, San Diego, Calif.

A correction is needed in the article "Dealing with Uneven Wood" in your July/August 1989 issue. In both the text and in Fig. 3C, you say that a ½ in. shift in the fence will provide a ½ in. tenon. Not true! The fence must be moved ½ in. *plus the thickness of the sawblade.*

John Peterson, Corvallis, Oreg.

My Sears table saw has an aluminum table top that is giving me problems. The table top has a series of ribs running from front to back. Unfortunately, these ribs have sharp edges that sometimes dig into the workpiece as I make a cut. This usually means some extra sanding before I can final finish. Is there a way to eliminate the problem, perhaps by using one of those "liquid plastic" products to fill the ribbed table top surface?

Mark Anderson, Niskayuna, N.Y.

Editor's Note: We called Sears and learned from Tom Saner, Buyer of Bench Power Tools, that your problem is often caused by a burr on one (or more) of the ribs. A dropped tool or other heavy object will usually create the burr. Some light sanding or filing should eliminate the burr and your problem. He does not recommend using anything to fill in the table top.

Thanks for the article in the July/August 1989 issue on how to do tinsel art. I've been doing tinsel art paintings for about three years now, and have found them to be a wonderful pastime. When tracing a pattern, I like to use inexpensive fine-tip and medium-tip fountain pens. They allow me to keep tracing without having to refill the ink as often.

Gerard C. O'Brien, Hudson, N.Y.

I'm looking for spoked wooden wheels. Can you provide me with a source of supply?

Ed Walters, Jacksonville, Fla.

You can get hardwood spoked wheels (in sizes ranging from 1½ in. diameter to 4½ in. diameter) from Trend-lines, 375 Beacham Street, Chelsea, MA 02150 or Cherry Tree Toys, P.O. Box 369, Belmont, OH 43718.

✻ SANDPAPER ✻

NO GIMMICKS — GREAT PRICES

BELTS: GRITS ASSORTED

UNLESS OTHERWISE SPECIFIED

1 x 30	$.69 ea	3 x 24	$ .80 ea
1 x 42	.69 ea	3 x 27	.83 ea
1 x 44	.69 ea	4 x 21¾	.91 ea
2½ x 16	.73 ea	4 x 24	.94 ea
3 x 18	.74 ea	4 x 36	1.14 ea
3 x 21	.77 ea	6 x 48	2.98 ea
3 x 23¾	.80 ea	2¼ x 80	2.47 ea

OTHER SIZES ON REQUEST

NO LOAD PAPER

	50/pk	100/pk
180-A thru 400-A	$10/pk	$18/pk

PRESSURE SENSITIVE ADHESIVE DISCS!

6"	$1.06 ea
8"	1.99 ea
9"	2.46 ea
10"	3.05 ea
12"	4.45 ea
15"	6.95 ea

✻ OTHER ITEMS ✻
✻ WIDE BELTS
✻ ROLLS
✻ FLAP WHEELS
✻ PUMP SLEEVES

✻ MINIMUM ORDER $25.00
✻ MASTERCARD, VISA OR CHECK
✻ SATISFACTION GUARANTEED!!

SHEETS: (9 x 11) PRICE

CABINET PAPER

	50/pk	100/pk
40-D	$16/pk	$30/pk
50-D	15/pk	27/pk
60-D	14/pk	25/pk
80-D	13/pk	23/pk
100 thru 150C	12/pk	21/pk

FINISHING PAPER

	50/pk	100/pk
80-A	$ 9/pk	$16/pk
100 thru 280A	8/pk	14/pk

WET/DRY PAPER

	50/pk	100/pk
220 thru 600A	$13/pk	$23/pk

✻ JUMBO CLEANING STICK ✻
$8.80

SEND MAIL ORDERS TO:
ECON-ABRASIVES
P.O. BOX B865021
PLANO, TX 75086
NATIONAL 1-800-367-4101
IN TEXAS (214) 377-9779

✻ TEXAS RES. ADD 6% SALES TAX
✻ SHIPPING CHARGES ADD $4.25

IF YOU VALUE YOUR FINGERS.....
YOU NEED A RIPSTRATE®

The RIPSTRATE holds the work tight against the fence with no hands near the blade. Makes perfect, straight cuts. Wheels lock to prevent kickbacks. *Requires no adjustment for stock width or thickness.*

Over 50,000 now in use in amateur, professional, school, government, military, and corporate maintenance shops.

One year guarantee, 30 day money back trial. Only $69 delivered. Check, M.O., Visa or M.C. Free Brochure.

Write or call our toll free number: 800-421-0256.

Fisher Hill Products, 3 Fisher Hill, Fitzwilliam, NH 03447

Dealer inquiries invited.

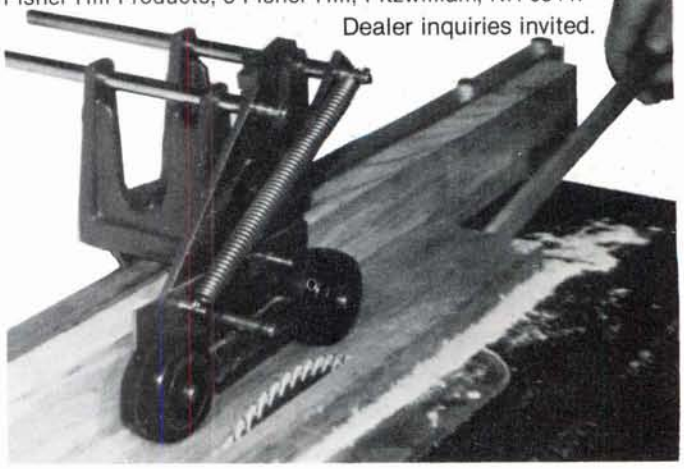

Woodworking Clubs

The Florida Woodworker's Association meets every first Thursday of the month at the Boys' Club of Ft. Walton Beach. For more information call Denny Mangum (telephone 904-863-8732) or write to the association at P.O. Box 1032, Ft. Walton Beach, FL 32549.

The Woodworker's Club of El Paso meets the last Sunday of each month at the Industrial Communications Co., 5515 Paisano, El Paso, Texas. If you would like more information, call Daryl Vanderburg (telephone 915-833-3608) or Paul Irwin (telephone 915-565-7340), or write to the club at 6405 Morningside Drive, El Paso, TX 79904.

Readers in the Raleigh, Durham, and Chapel Hill regions of North Carolina will be interested to learn that the Triangle Area Woodworkers Club meets every third Tuesday of the month at 7:30 p.m. in the North Carolina Science and Technology Research Center (NCSTRC), 2 Davis Drive, Research Triangle Park, North Carolina. If you would like to know more, call Edward E. Walker (daytime telephone 919-549-0671) or write to the Triangle Area Woodworkers Club, P.O. Box 12076, Research Triangle Park, NC 27709-2076.

We would like to hear from other woodworking clubs about programs. In particular, we would like to know how to get slides, VHS tapes, and films. Any information would be appreciated.

Rev. Tom Vincell
Tri-State Woodworkers Club
4315 Chadwick Street
Ashland, KY 41101

Recall

Sears, Roebuck and Company and the Emerson Electric Company have announced a voluntary recall of guards on approximately 400,000 of their 8 in. and 9 in. table saws. Consumers will be sent a replacement guard, free of charge, by calling toll-free 1-800-237-8279.

Under certain conditions, if the guard is in the raised position during operation, the guard could drop on the spinning blade, causing the blade to break. The user could be struck by the thrown guard or could make hand contact with the exposed blade.

When correctly used in accordance with the saw instructions, the guard will never be in the raised position during use. The guard will either be down in place, covering the blade, or for certain operations, completely removed.

The affected saws were sold since September 1984. The following model numbers are covered by the recall: 113.221610, 113.221611, 113.221640, 113.241730, 113.241740. The recall does not affect any other Sears table saws.

CABINETRY and ASSEMBLY TECHNIQUES

... Now in Video Tape!

Now you can improve your woodworking skills for professional results . . . at home and at your own pace.

This two-hour video is presented by John Parko, a woodworking expert and an experienced high school and adult education shop teacher. He will teach you the techniques that are used most often to build furniture, cabinets, chests and many other popular wood projects — using frame and panel construction. John will guide you through basic Cabinetry such as blade selection, gluing and clamping, and then on to advanced techniques of cove and tenon cuts and cutting raised panels, using the table saw as the major power tool. Unlike other video programs, this woodworking video covers a project from start to finish (including staining). Not only will you learn the proper techniques of frame and panel construction (by watching John build the Blanket Chest shown), but also all the critical woodworking know-how of assembly for professional results. With what you'll learn, you will be able to apply that knowledge to build the chest and many other wood projects of your choice. Printed chest plans are included free!

Best indication of the production quality of this tape is the fact that hundreds of high schools, vo-techs and universities are now using it in instructional settings.

Don't delay, send $29.95 plus $3.00 shipping for your personal video cassette on woodworking to . . .

ROGA ENTERPRISES INC.
P.O. BOX 2743J CODY, WY 82414

☐ MASTERCARD ☐ VISA ☐ CHECK

Acct. No. _____ Exp. _____
Signature _____
Name _____
Address _____
City _____ State _____ Zip _____

Dealer Inquiries Welcome
(307) 527-6671

VHS only

MEISEL HARDWARE SPECIALTIES
CHRISTMAS & HALLOWEEN PROJECT PLANS

LIGHT-UP NOSE YARD STAKES PLANS

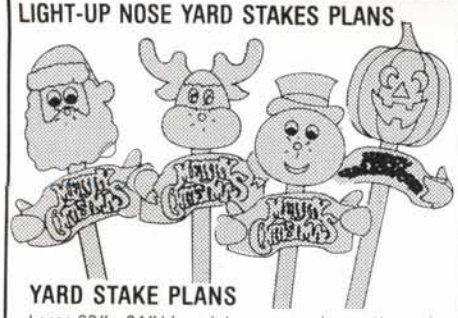

YARD STAKE PLANS

Large 22″×34″ blueprints are very clear and easy to follow. All drawings are FULL SIZE.

#W420 Santa Plan ..... **$3.99/EA.**
#W421 Rudolph Plan ..... **$3.99/EA.**
#W422 Snowman Plan ..... **$3.99/EA.**
#W423 Pumpkin Plan ..... **$3.99/EA.**

HARDWARE PARTS KITS

These kits contain the lighting kit, bulb, eyes, screws and pre-cut wood banner only. (Wood, plan and paint are not included.)

#8766 Light-Up Santa Hdw. Kit ..... **$5.50/EA.**
#8767 Light-Up Rudolph Hdw. Kit ..... **$5.50/EA.**
#8768 Light-Up Snowman Hdw. Kit ..... **$5.50/EA.**
#8769 Light-Up Pumpkin Hdw. Kit ..... **$5.50/EA.**

PLYWOOD YARD ORNAMENTS PLANS

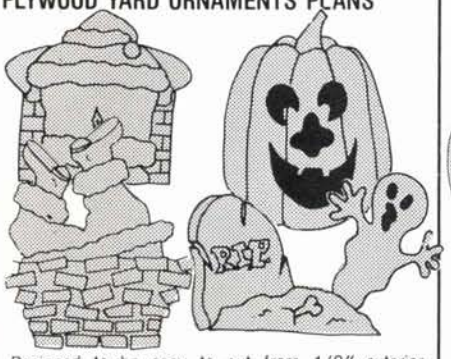

Designed to be easy to cut from 1/2″ exterior plywood and easy to paint. Our FULL SIZE blueprints are available in a small, medium or large size. Large and medium ornaments mount with 2″×2″ stakes. Small ornaments use kit below.

#W444 Santa Rear View Plan 20″ ..... **$3.99/EA.**
#W445 Santa Rear View Plan 30″ ..... **$5.99/EA.**
#W446 Santa Rear View Plan 40″ ..... **$7.99/EA.**
#W451 Santa Wedged Plan 24″ ..... **$3.99/EA.**
#W452 Santa Wedged Plan 36″ ..... **$5.99/EA.**
#W453 Santa Wedged Plan 48″ ..... **$7.99/EA.**
#W457 Jack-O-Lantern Plan 27″ ..... **$3.99/EA.**
#W458 Jack-O-Lantern Plan 40″ ..... **$5.99/EA.**
#W459 Jack-O-Lantern Plan 54″ ..... **$7.99/EA.**
#W463 Ghost & Grave Plan 20″ ..... **$3.99/EA.**
#W464 Ghost & Grave Plan 30″ ..... **$5.99/EA.**
#W465 Ghost & Grave Plan 40″ ..... **$7.99/EA.**

MOUNTING ROD KIT (for small yard ornaments)

#8675 Mounting Rod Kit
1-9 ..... **$4.29/KIT**
10-19 ..... **$3.99/KIT**

DOOR HARP PLANS & KITS

WHAT'S A DOOR HARP?

Mounted on the inside of your door, a door harp will welcome your guests with a beautiful musical tune each time the door is opened. You'll find it easy to build these door harps in your shop using only standard 3/4″ stock and our special Hardware Parts Kits.

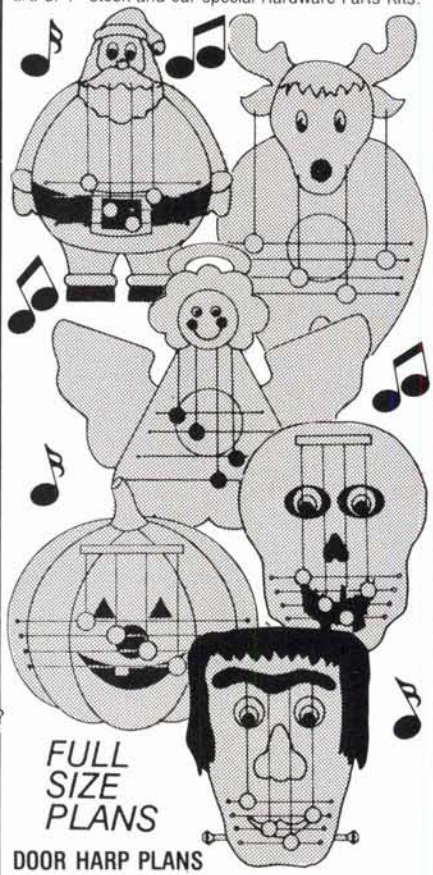

DOOR HARP PLANS

#W426 Santa Plan ..... **$3.99/EA.**
#W427 Rudy Plan ..... **$3.99/EA.**
#W428 Angel Plan ..... **$3.99/EA.**
#W314 Jack-O-Lantern Plan ..... **$3.99/EA.**
#W430 Skull Plan ..... **$3.99/EA.**
#W432 Frankenstein Plan ..... **$3.99/EA.**

HARDWARE PARTS KITS

These kits contain the hard to get parts—special high resonance plywood, tuning pins, clapper balls, music wire and plastic eyes. You need to supply some 3/4″ stock, and the paint. Plan is not included with kit, order separately above.

#8780 Santa Hdw. Kit ..... **$6.95/EA.**
#8781 Rudy Hdw. Kit ..... **$7.50/EA.**
#8782 Angel Hdw. Kit ..... **$7.95/EA.**
#8254 Jack-O-Lantern Hdw. Kit ..... **$7.25/EA.**
#8784 Skull Hdw. Kit ..... **$7.50/EA.**
#8786 Frankenstein Hdw. Kit ..... **$7.95/EA.**

MUSICAL CHARACTERS

Push the button and the music box *plays a tune.* Order FULL SIZE plans and Hardware Parts Kit below.

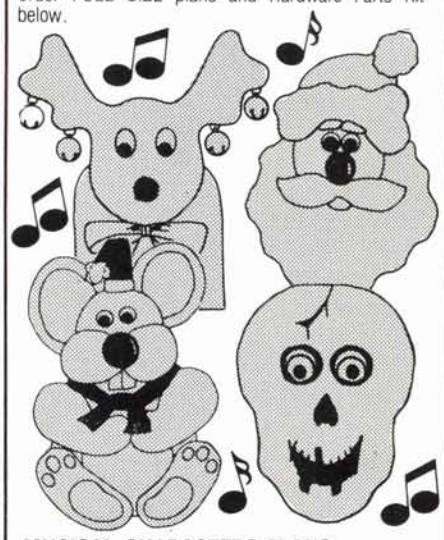

MUSICAL CHARACTERS PLANS

#W287 Musical Rudy Plan ..... **$2.75/EA.**
#W438 Musical Santa Plan ..... **$2.75/EA.**
#W439 Musical Mouse Plan ..... **$2.75/EA.**
#W441 Musical Skull Plan ..... **$2.75/EA.**

HARDWARE PARTS KIT

Wood not included with kit.

#7906 Music Rudy Hdw. Kit ..... **$4.79/EA.**
#8840 Music Santa Hdw. Kit ..... **$2.99/EA.**
#8841 Music Mouse Hdw. Kit ..... **$4.79/EA.**
#8843 Music Skull Hdw. Kit ..... **$3.79/EA.**

TISSUE BOX HOLDER PLANS

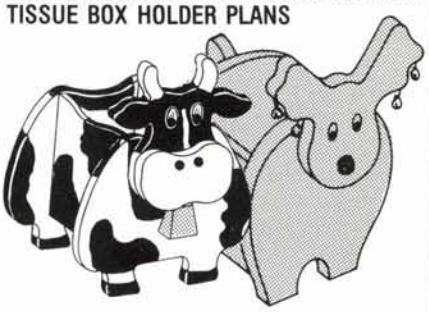

These cute animals hold a standard square tissue box. Easy to make from 1/2″ plywood. Available in Bessy the Cow or Rudolph the Reindeer.

#W411 Tissue Box Bessy Plan ..... **$3.99/EA.**
#W443 Tissue Box Rudy Plan ..... **$3.99/EA.**

TISSUE BOX HARDWARE KITS

Includes the eyes, nose and bells only. (Wood, paint and project plan are not included.)

#8621 Small Bessy Hdw. Kit ..... **$1.39/EA.**
10 or more ..... **$1.29/EA.**
#8845 Tissue Box Rudy Hdw. Kit ..... **$ .99/EA.**
10 or more ..... **$ .89/EA.**

NEW CATALOG

Catalog of OVER 100 Christmas/ Halloween PROJECT PLANS

ORDERS ONLY CALL TOLL FREE 1-800-441-9870
Minimum Credit Card Order $25.00

2 Catalogs available:
MHS Christmas Catalog $1.00
Regular MHS Catalog.....$1.00
or Both Catalogs sent FREE WITH ORDER

MAIL $2.00 TODAY TO

HOW TO ORDER: State quantity, part number, item, price, and total of order. Send check, money order, or Visa or M.C. number and Exp. date. Shipping: $25.00 to $49.99 add $4.95, $50.00 to $74.99 add $5.95, $75.00 to $99.99 add $6.95, over $100.00 add $7.95. **Minimum order of $25.00.**

Print Name _____
Address _____
City _____ State _____ Zip _____
Phone #( ) _____

MEISEL HARDWARE SPECIALTIES P.O. BOX 70-J10 MOUND, MN 55364

Readers' Information Exchange

Looking for an owner's manual for an old band saw? Need a bearing for a hand-me-down table saw? Can't find a source of supply for an odd piece of hardware? Maybe our readers can help. Send along your request and we'll try to list it here — and perhaps one of our readers will have an answer for you. Due to space limitations, we'll be unable to list all requests, but we'll include as many as we can.

I am trying to find a ½ in. capacity drill press chuck to fit a ½-24 threaded spindle.

Russell Zillgitt
118 N. 7th St.
Lake City, MN 55041

I would like to find a source of supply for an upper saw guide holder (part no. 13043) for a Craftsman 12 in. band saw, model no. 103.0103.

Albert Wellbrock
6601 Laroche Ave.
Savannah, GA 31406

Do you or your readers have a source for the purchase of 1¼ in. high Arabic numerals 0 through 9, die formed from thin (22-30 gauge) plain or embossed aluminum or brass, with punched holes for mounting with brads?

Laurice Barr
4180 Carvel Lane
Edgewater, MD 21037

I am looking for a supplier for suede- or velvet-covered cardboard linings for jewelry boxes.

Earl J. Reinke
2140 Smith Lane
Fortuna, CA 95540

Can someone help me in finding a plan or a book that explains how to make a yarn counter. I would also like to know where I can get parts such as the gears made of wood.

John Welt
P.O. Box 472
Gladwin, MI 48624

I need a source for a wet grinding wheel that's 10 in. diameter by 1½ in. thick and has a 1 in. diameter arbor hole. I would like it in 180- to 200-grit.

R.J. McMillan
3837 Bennett Road
Cincinnati, OH 45245

Owner's Manuals and Parts Lists

Craftsman 12 in. band saw, model no. 103.0103 . . . . . *David Daurer*
306 Woodlawn Ave.
Michigan City, IN 46360

Craftsman 10 in. table saw, model no. 113.2991 . . . *James A. Wheatley*
Route 3, Box 302
Rich Hill, MO 64779

Craftsman shaper, model no. 113.23941 . . . . *Philip W. Schloss*
R. 2, Box 196A
Pomona, MO 65789

Craftsman table saw, model no. 103.20000 . . *Gregory W. Sandell*
226 Vista St.
Livermore, CA 94550

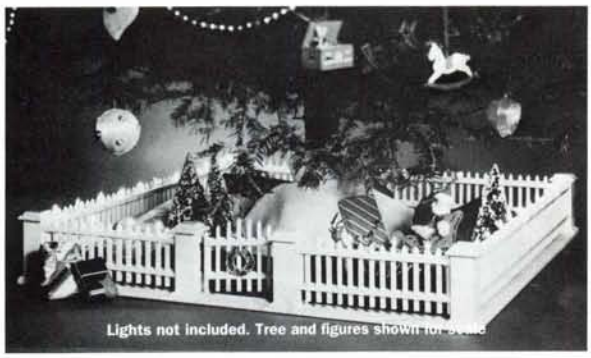

Christmas Heirloom Fence

Enhance the beauty of your Christmas tree with this heirloom fence. A lifetime of pleasure for your family.

Make a little village and have Santa come through the gate!

Comes in kit form ready to assemble and finish, 29″ × 29″

Made of eastern select pine, all pieces are pre-cut, with full-sized plans.

Satisfaction guaranteed.

$95 plus $2 postage & handling

New Hampshire Woodworkers

515 Winnacunnet Road • Hampton, NH 03842

BRAD POINT DRILL SETS

7 Pc. set in pouch or 25 Pc. set in metal case.

7 Pc. set contains ⅛" to ½" by 1/16" increments. **MODEL G1834** ONLY **$6.95**

25 Pc. set contains ⅛" to ½" by 1/64" increments. **MODEL G1835** ONLY **$27.50**

Both Sets Prepaid To You!

INCRA JIG

Make intricate dovetails, finger-joints, etc. . . with this amazing jig.

Introductory Price!

MODEL G1768

$29.95 Prepaid To You

TEMPLATES FOR INCRA-JIGS

MODEL G1832

ONLY $14.95 Prepaid To You

THE INCREDIBLE SHOPHELPER

PRICE BREAKTHROUGH!

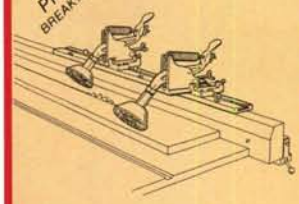

A MODEL FOR EVERY APPLICATION!

MODEL G1630 - YELLOW SHOPHELPERS FOR TABLE-SAWS

MODEL G1578 - GREEN SHOPHELPERS FOR SHAPERS

MODEL G1766 - ORANGE SHOPHELPERS FOR RADIAL-ARM SAWS

YOUR CHOICE - ONLY **$49.95** ea.

Prepaid To You!

MADE IN USA!

Thousands sold at up to $89.95!

EAST OF THE MISSISSIPPI: 1-800-523-GRRR

Grizzly IMPORTS, INC.

CALL TOLL FREE

WEST OF THE MISSISSIPPI: 1-800-541-5537

(FOR ORDERS AND CATALOG REQUESTS ONLY) 89-109

MIRRORA - BEVELED CIRCLES

PERFECTLY BEVELED MIRROR

- 6 sizes of circles from 1½" to 6" and 63 other sizes, shapes and colors available • 1,000,000 pieces in stock–UPS Shipable–Ready-to-go
- Highest quality float glass–Double-backed for protection • We fabricate any shape or size of glass & mirror
- Call 1-800-MIRRORA Now to place orders and get our color catalog

FLORAL
Glass & Mirror, Inc.
895 Motor Parkway
Hauppauge, New York 11788
516/234-2200 800-647-7672

SPECIAL OFFER

Distinguish Your Fine Workmanship With Your Own, Personal

BRANDING IRON

For Hard and Soft Wood

$24.00
Plus $2.00 for shipping and handling
Nebr. residents add correct sales tax

ORDER TOLL FREE
1-800-826-7606 (except Nebraska)
IN NEBRASKA 402-464-0511

MasterCard VISA

SATISFACTION GUARANTEED
or your money back

- Shipped in 1 week
- Solid brass head — deep cut letters
- 1st Line: HAND CRAFTED BY — as above
- 2nd Line: Your choice — 20 characters/spaces max.
- Compact size
- As above but with 3rd line — $37.00 + $2.00

For free brochure, write or call (402) 464-0511

Order by mail from: **NOVA TOOL CO.**
12500 Finigan Rd., Dept. WJ
P.O. Box 29341, Lincoln, NE 68529

Popular, Pocket-size
MINI-LIGNO
$110
Only

Incl. Case, Batteries and Pins for 3/16" and 7/16" Measuring Depth.

Also available as:
Mini-E: Range 6-36%
Mini-C with external probe.

Everybody Knows

that the moisture content of wood is crucial. Moisture related defects such as surface checks, warpage, cracks, loose joints, foggy finishes, etc., can ruin the best piece ever built.

Everybody Knows

moisture defects are irreversible. Therefore don't waste money and time on wet wood. Use a moisture meter to be sure you work only with dry wood.

Ask for *free brochure* on moisture meters (range 4-30%, 4-60%) and accessories to monitor air or kiln drying.

Wood Moisture Meter
from Lignomat USA

P.O. Box 30145
Portland, OR 97230
Tel: 800-227-2105 503-257-8957

Are You Moving Soon?

We're trying to keep up with you!

Did you know that 17% of our subscribers move each year? And we don't want to lose you. The Post Office no longer forwards magazines free of charge, so please advise **The Woodworker's Journal** of your new address as soon as possible.

To insure that you won't miss an issue, send us a recent mailing label and/or your old address, along with your new address and moving date, at least 6 weeks before our next issue. Sorry, we cannot replace issues missed due to delayed change of address notice.

The Woodworker's Journal, P.O. Box 1629, New Milford, CT 06776

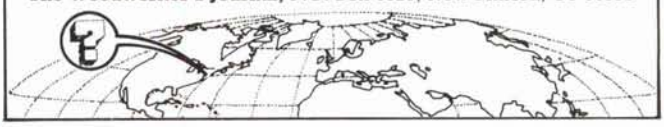

Catch The *ROADRUNNER*... The Fastest Blade Running!

Designed for today's woodworking professionals, contractors and serious D-I-Y'ers, the *ROADRUNNER* is the ultimate performance blade.

SPEED: An aggressive hook angle combined with the "thinnest" kerf and plate make *ROADRUNNER* the fastest cutting blade of its kind sold in America. (For both soft and hard woods.)

FEED: The ultra-thin kerf and special body expansion grooves allow the *ROADRUNNER* to make straight, accurate cuts in all directions of the wood grain.

SMOOTH: The large number of teeth provide smooth, splinter-free cuts even in the most difficult materials.

So catch the *ROADRUNNER* and our **Money-Back Guarantee** if you're not fully satisfied.

Call or write for a free catalog and the name of your local dealer.

OLDHAM-UNITED STATES SAW
P.O. Box 1, Burt, NY 14028
1-800-828-9000 (Nationwide)
1-716-778-8588 (New York State)
716-778-8625 (Fax)

BROOKFIELD
CRAFT CENTER

PRESENTS

Over 200 workshops by professional craftsmen in both traditional and non-traditional visual arts.

Weekend workshops/Evening and day classes.

Write or call for our quarterly catalogue.

P.O. Box 122 Brookfield, CT 06804 203-775-4526

Product News

To keep our readers up-to-date, this column features brief descriptions of new tools and supplies on the market. The product descriptions are provided by the manufacturer and are not a result of tests or reviews by the editors of ***The Woodworker's Journal.***

EZE-Angleguide

By combining any of these eight fiberboard templates, you can cut 160 different angles without ever adjusting your radial-arm saw. Set your saw to 90 degrees and never move it again. Make cuts left or right without ever swinging the arm across the table. An angle chart is included to let you cut any angle from one-half degree to 80 degrees in half-degree increments. Especially helpful for angles from 50 degrees to 80 degrees, which are difficult to cut on a radial-arm saw. Easy to use. Cuts are faster and more accurate. Great for sliding tables on table saws too. For more information, contact Steussy Creations, 334 Atherton Avenue, Novato, CA 94947; Tel. (415) 897-1457.

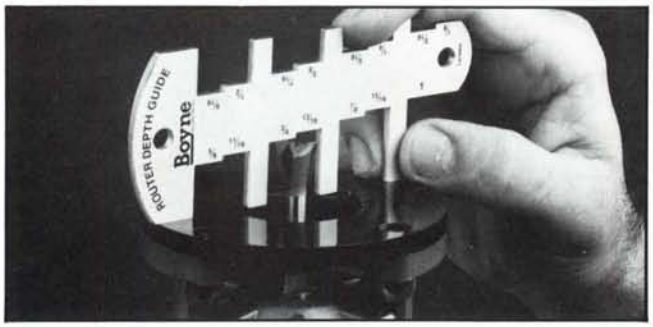

Router Depth Gauge

Fine wood costs too much to find your router depth by trial and error. Before you start grooving your expensive stock, be sure your depth setting is exact with this handy gauge. It will precisely check 15 depths-of-cuts in $\frac{1}{16}$ in. increments from $\frac{1}{8}$ in. through 1 in. For more information, contact Leichtung Workshops, 4944 Commerce Parkway, Cleveland, OH 44128; Tel. (216) 831-6191.

Lumber Grading Video

The National Hardwood Lumber Association in cooperation with the Missouri Department of Conservation has produced an 18-minute video to make buying hardwood lumber easier. The video explains what the

(continued on page 13)

1/2" Shank Carbide-Tipped Router Bits Moulding Plane Profiles

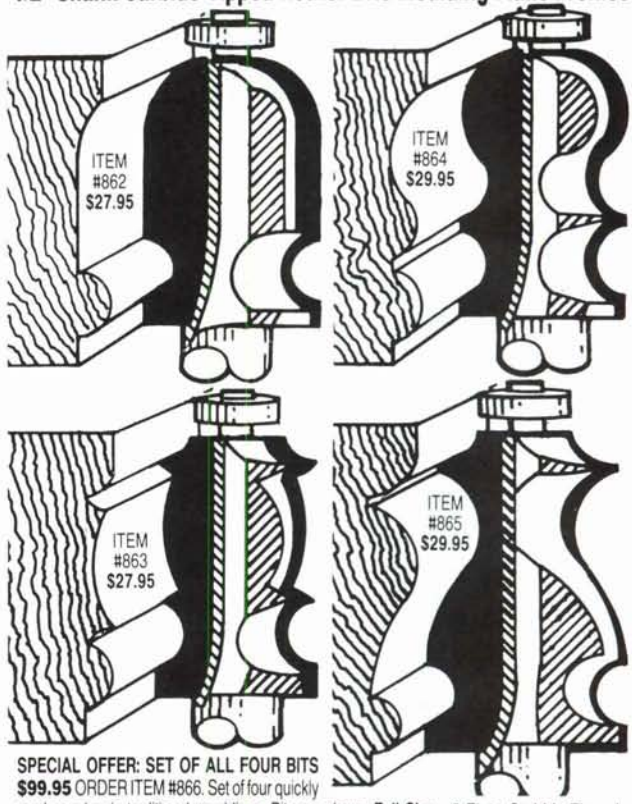

SPECIAL OFFER: SET OF ALL FOUR BITS
$99.95 ORDER ITEM #866. Set of four quickly produce classic traditional mouldings. Bits are shown **Full Size - 2 Flute Carbide Tipped.**
Order by VISA / MasterCard, 7 Day / 24 Hour Service, Call **1-800-533-9298**
or send check to: **MLCS Ltd., P.O. Box 4053 JD, Rydal, PA 19046**

The Best Blade Is No Secret...It's A *WIZARD!*

A sharp departure from conventional blade design, the *WIZARD* is the smoothest cutting carbide blade ever manufactured!

ELIMINATES TEAROUT OR SPLINTERING: Large bevel angles (30°) produce lower cutting pressures—virtually eliminating tearout.

SANDED-LIKE SIDES: Shallow side clearance angles enable the *WIZARD* to cut with the entire side of the carbide tip (not just the top), creating a planing action which leaves the wood with a smooth, sanded-like finish.

100% CUSTOMER SATISFACTION GUARANTEE: If the *WIZARD* isn't the smoothest cutting blade you've ever used, return it for a full refund.

Available in heavy duty plate for stationary equipment and mitre-thin plate for mitre boxes.

Call or write for a free catalog, sample cuts and the name of your local dealer.

OLDHAM-
UNITED STATES SAW
P.O. Box 1, Burt, NY 14028
1-800-828-9000 (Nationwide)
1-716-778-8588 (New York State)
716-778-8625 (Fax)

PORTER+CABLE

Model 693
1½ HP Plunge Router

- Powerful, lightweight plunging router designed for all types of operations: Cutouts, Grooving, Chamfering, Rabbeting, Edgework; for use with fixtures and templets as well as freehand.
- Solid die-cast and precision machined aluminum motor housing and base for greater accuracy and durability.
- Smooth plunging action with fully enclosed springs, to help keep springs and posts free of accumulated dirt, chips, and dust.
- Adjustable depth rod and six-position stop turret provide unlimited combination of depth selections. Positive action knobs enable setting and locking rod into position in seconds.
- Clearly marked 2½" scale for accurate, repeatable depth setting.
- Knurled stop-nuts may be set to restrict retraction of router motor to less than full post height (for applications where no plunge, or shortened plunge is desirable).
- Quick-release plunge lever is located conveniently to side handles. No need to remove hand to release or lock base in position during plunging operations.
- Permanently sealed ball bearing construction for long tool life.
- Collets are preferred split-type, providing superior shank holding power while reducing bit run-out.
- Base accepts standard Porter-Cable sub-bases (Nos. 42186 & 42188), edge guides (Nos. 42160 & 5043), and templet guides.
- Standard equipment includes 6902 motor, 6931 base, 42591 & 43000 collets, 42596 & 42914 wrenches, and operating manual.

★ SPECIFICATIONS

Horsepower	1-1/2	Base Diameter	5-3/4"
Power	120 VAC only	Collets (Split-Type)	
Amps	10	Standard	1/4" & 1/2"
Motor diameter	3-1/2"	Available	3/8"
Speed (RPM)	23,000	Net Weight (Lbs.)	11-1/2
Plunging Depth	2-1/2"	Shipping Weight (Lbs.)	13-1/4
Height	8-7/8" min to 10-1/2" max		

At last...the plunge router worth waiting for!!

NEW

MODEL 693

$180.00
FREE U.P.S.

Model 6931
3½" Plunge Router Base

NOW...TURN YOUR PORTER-CABLE FIXED-BASE ROUTER INTO A PLUNGE ROUTER.

- **Fits most 3-1/2" Porter-Cable (or previous Rockwell), motors: 100 (except with segment cap depth adjustment), 350, 630, 670, 690, 691**

NOTE: Model 6931 Base Also Fits The Following Competitive Routers:
- **Black & Decker Model 2720.**
- **Bosch models 1601, 1602, 1603, 1604, 1606.**
- Base accepts standard Porter-Cable sub-bases (Nos. 42186 & 42188), edge guides (Nos. 42160 & 5043), and templet guides.
- Provides all the plunging cababilities and operation benefits described with Model 693 (above).
- Standard equipment includes No. 6931 base, 42186 sub-base, and operating manual.

NEW

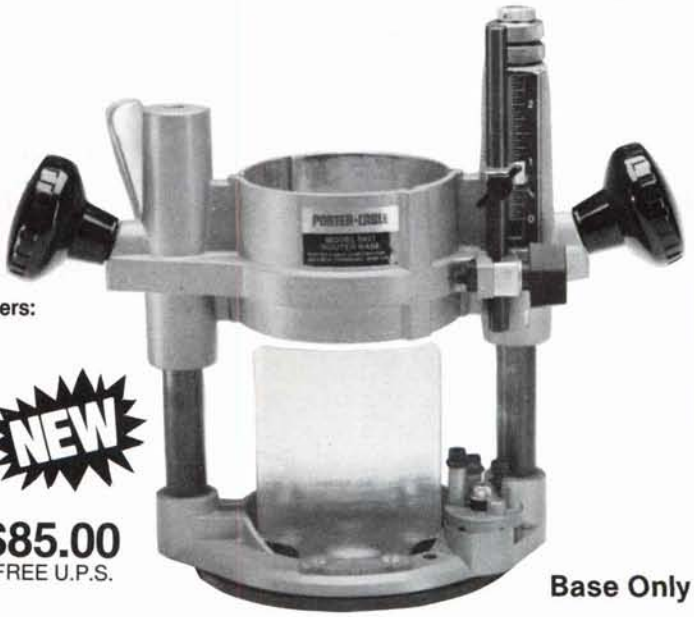

$85.00
FREE U.P.S.

Base Only

TOOLS OF THE TRADE

100 Federal Road (I-84, Exit 7)
Danbury, CT 06810
In CT: (203) 748-8134
Out of State: (800) 422-0062

MasterCard VISA DISCOVER

Quantities may be limited. Prices subject to change without notice. Not responsible for typographical errors. CT Res. add 8% sales tax.

NHLA grades are all about, and clarifies the cutting unit method and the basic yield requirements of the most commonly used grades. It also explains the nomenclature (FAS, FAS1F, Selects, No. 1 Common, No. 2 Common, etc.), and takes the mystery out of the standard rules. Copies of the video can be obtained in ½" VHS format from the National Hardwood Lumber Association at a moderate cost. Call (901) 377-1818 for information.

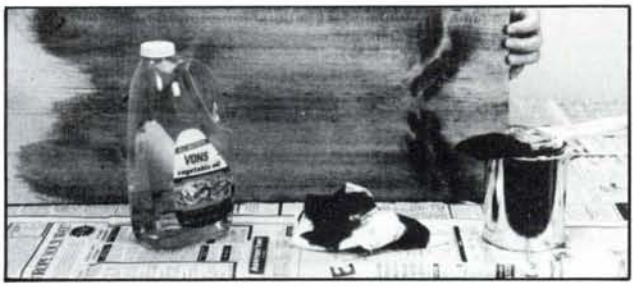

Odorless, Non-Toxic Wood Stain

A new wood stain made by The Truly Persnippity Paint Company is odorless, non-toxic, cleans up with soap and water, and dries hard in 24 hours. It accepts all finishes, including lacquer. The stain is a dry concentrate that is mixed into regular household vegetable oil, and is available in three colors: dark walnut, light walnut and mahogany. For more information, contact The Truly Persnippity Paint Company, 607 N. Horne Street, Oceanside, CA 92054; Tel. (619) 433-3652.

Tadpole Contour Sanding Grips

These contour sanding grips make it easy to sand small curves, tight spots and detailed areas. Just wrap sandpaper around a flexible grip to quickly smooth any rough or damaged curves. Protects your hands from sharp corners and splinters, too. The sanding pads included in the eight piece set are flexible enough to sand round and curved surfaces, and stiff enough to sand flats, edges and corners. The set of eight pieces includes contoured grips in ¼, ½, ⅜ and ⅝ in. diameters, a flat-bottom grip and one each soft, medium and firm sanding pads. Also available is a set of four Tadpole Concave Sanding Grips with inward-curved bases that match the round diameter bases in the set above. Kits can be purchased separately or in a combination package of 12 pieces. For more information, contact Woodcraft Supply, P.O. Box 4000, Woburn, MA 01888; Tel. (617) 935-5860.

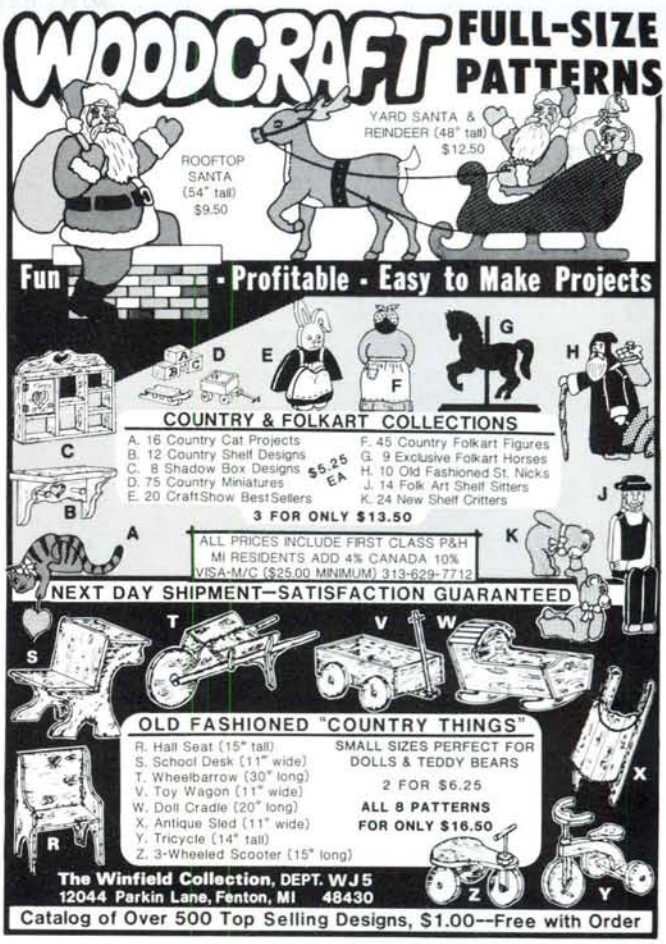

12 SHOWS IN FALL 1989!
Free Workshops ★ 100 Exhibits ★ Win a Jeep 4x4

★ *The* **Woodworking Shows** ★
machinery
tools • supplies

SEE THE WIDEST VARIETY OF WOODWORKING PRODUCTS UNDER ONE ROOF
Hundreds of Items
Machinery • Power & Hand Tools • Supplies

Sept. 8-9-10	Greater Cincinnati	Cincinnati Convention Center
Sept. 15-16-17	Twin Cities	St. Paul Civic Center
Sept. 22-23-24	*Metro-Detroit	Cobo Hall, Detroit
Sept. 29 - Oct. 1	Western Washington	Seattle Center
Oct. 6-7-8	*No. California	Cow Palace, San Francisco
Oct. 13-14-15	Baltimore/Washington	Festival Hall, Baltimore
Oct. 20-21-22	Pittsburgh Tri-State	Pittsburgh ExpoMart, Monroeville
Oct. 27-28-29	Central Florida	Curtis Hixon Conv. Ctr., Tampa
Nov. 3-4-5	Oregon	Portland Memorial Coliseum
Nov. 10-11-12	So. California	Los Angeles County Fairgrounds
Nov. 17-18-19	San Diego	Convention & Perf. Arts Center
Dec. 1-2-3	Delaware Valley	Garden State Park, New Jersey

**Special Woodworking/Home Improvement Show*

Seminars by Ian Kirby - Roger Cliffe - Bob Rosendahl
Rude Osolnik - Nick Cook - and other Master Craftsmen

1-800-826-8257 or 213-477-8521
Call for free brochure, 8:30 - 5 Pacific Time

Save $1 off reg. $6 admission with this ad

BUY ANY 10 ITEMS AND DEDUCT 10%

CASCADE TOOL CO.

BUY ANY 10 ITEMS AND DEDUCT 10%

Box 3110, Bellingham, WA 98227

QUALITY CARBIDE-TIPPED SY BRAND ROUTER BITS AND SHAPER CUTTERS!

FOR THE ROUTER!

Double-Fluted

Straight

PART NO.	D	PRICE
SY4-6	1/4	$6
SY4-8	5/16	$6
SY4-10	3/8	$6
SY4-12	1/2	$8
SY4-1 6	5/8	$10
SY4-19	3/4	$10
SY4-25	1	$12
SY4 = 1/4" SHANK		
SY8 = 1/8" SHANK		
SY8-6	1/4	$6
SY8-8	5/16	$6
SY8-10	3/8	$6
SY8-12	1/2	$8
*SY8-12 (2")	1/2	$15
SY8-16	5/8	$10
*SY8-16 (2-1/2")	5/8	$15
SY8-19	3/4	$10
*SY8-19 (2")	3/4	$15
SY8-25	1	$12
SY8-30	1-1/4	$12
SY8-35	1-3/8	$15
SY9-40	1-5/8	$18

* LONGER CUTTING EDGE

Roundover

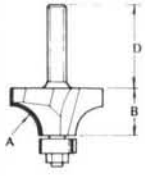

PART NO.	A	PRICE
S502Y	1/16R	$11
S504Y	1/8R	$11
S506Y	3/16R	$11
S508Y	1/4R	$12
S510Y	5/16R	$13
S512Y	3/8R	$15
S516Y	1/RR	$16
*S516Y-1/2	1/2R	$16
*S520Y-1/2	5/8R	$16
*S524Y-1/2	3/4R	$20
*S528Y-1/2	7/8R	$34
*S523Y-1/2	1R	$34
*S536Y-1/2	1-1/4R	$40

Core Box

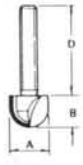

PART NO.	A	PRICE
S408	1/4	$10
S412	3/8	$10
S416	1/2	$12
S420	5/8	$14
S424	3/4	$15
*S424-1/2	3/4	$15
*S423-1/2	1	$18
*S450-1/2	1-1/2	$30

Dovetail

PART NO.	D	PRICE
802	3/8	$7
804	1/2	$7
*804-1/2	1/2	$7
806	9/16	$8
810	3/4	$9
*810-1/2	3/4	$9
*812-1/2	1	$12

Beading

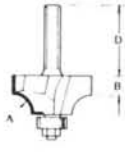

PART NO.	A	PRICE
S602Y	1/16R	$11
S604Y	1/8R	$11
S606Y	3/16R	$11
S608Y	1/4R	$12
S610Y	5/16	$13
S612Y	3/8R	$15
S616Y	1/2R	$16
*S616Y-1/2	1/2R	$16
*S624Y-1/2	3/4R	$20

Flush Trimming

PART NO.	A	PRICE
S8012Y	3/8	$7
S8016Y	1/2	$8
*S8016Y-1/2	1/2	$8
S8020	5/8	$10
*S8020-1/2	5/8	$10

Roman Ogee

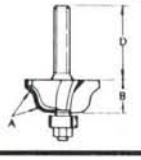

PART NO.	A	PRICE
S5705Y	5/23	$16
*S5705Y-1/2	5/32	$16
S5708Y	1/4	$18
*S5708Y-1/2	1/4	$18

Cove Bits

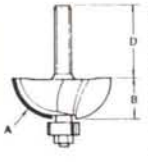

PART NO.	A	PRICE
S702Y	1/16	$12
S704Y	1/8	$12
S706Y	3/16	$12
S708Y	1/4	$13
S710Y	5/16	$14
S712Y	3/8	$15
S716Y	1/2	$16
*S716Y-1/2	1/2	$16
*S724Y-1/2	3/4	$28

Slot Cutter – 4 Flutes

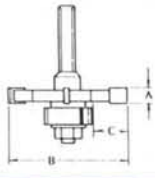

PART NO.	A	PRICE
SY7002	1/8	$20
*SY7002-1/2	1/8	$20
SY7004	5/32 (4mm)	$22
*SY7004-1/2	5/32 (4mm)	$22
SY7006	3/16	$22
*SY7006-1/2	3/16	$22
SY7008	1/4	$24
*SY7008-1/2	1/4	$24

FOR THE SHAPER!

3mm thick C-2 carbide, 3/4" bore with 1/2" bushing

Straight

SY-1212-1 1/4" $24.95
SY-1212-2 3/8" $26.95
SY-1212-3 1/2" $28.95
SY-1212-4 3/4" $32.95
SY-1212-5 1" $35.95
SY1212-6 1-1/2" $36.95
SY-1212-8 2" $59.95

Bead

SY-1224-1 1/4" $24.95
SY-1224-2 3/8" $26.95
SY-1224-3 1/2" $28.95
SY-1224-4 3/4" $32.95
SY-1224-5 1" $35.95

Flute

SY-1223-1 1/4" $24.95
SY-1223-2 3/8" $26.95
SY-1223-3 1/2" $28.95
SY-1223-4 3/4" $32.95
SY-1223-5 1" $35.95

Corner Round

SY-1225-1 1/4" R $24.95
SY-1225-2 3/8" R $26.95
SY-1225-3 1/2" R $28.95
SY-1225-4 3/4" R $32.95
SY-1225-5 1" R $35.95
SY-1225-6 1-1/4" R $49.95

CARBIDE TIPPED SHAPER CUTTER PANEL RAISER –
3 WING, 5 PROFILES, 3MM THICK CARBIDE
• 4-5/8" O.D. with 3/4" BORE (1/2" BUSHING)
• 5-1/2" O.D. with 1-1/4" BORE (1" BUSHING)

$69.95

SY BRAND — 5° FACE CUT — 15° FACE CUT — CONCAVE — 12° FACE & QTR RD — CONVEX

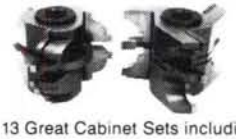

6 PC CARBIDE TIPPED CABINET SETS
• 3 mm CARBIDE
• 3/4" BORE W/1/2" BUSHING
ONLY $179.95

13 Great Cabinet Sets including these popular Profiles:

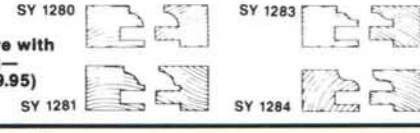

(1-1/4" Bore with 1"Bushing— ONLY $249.95)

A Choice of Edge Beading Bits

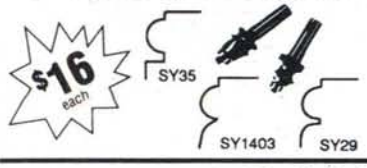

NEW Concept in Router Bit Cabinet Door Construction!! $59.95

SY brand. Complete with bearing. Now time spent adjusting the bit to achieve a perfect 1/4" tongue has been eliminated – and your rail & stiles and center panels can all be the same height with this incredible cutter – and it's only $59.95 in any of our five raised panel profiles.

THE ROUTER HANDBOOK

A definitive guide demonstrating how your router can be used to carve, drill, cut, as well as perform an array of other tasks more quickly and accurately than any other tool in the workshop.

$7.95

MasterCard

CALL TOLL FREE: 1-800-235-0272

7 am - 5 pm Pacific Time/Monday-Friday

VISA

Cabinetmakers' Supplies

Clock Parts

As a service to our readers, *The Woodworker's Journal* periodically lists sources for various woodworking products. In this issue we are listing companies that specialize in mail-order sales of clock parts. Most will carry such components as movements, dials, hands, numerals and miscellaneous clock hardware. Some also offer plans and kits.

The American Clockmaker
(formerly Craft Products Co.)
P.O. Box 326
Clintonville, WI 54929
Catalog $2.50

Armor Products
P.O. Box 445-H
East Northport, NY 11731
Catalog free

Cas-Ker Company
2121 Spring Grove Ave.
Cincinnati, OH 45214
Catalog $1.00

Emperor Clock Company
Emperor Industrial Park
Fairhope, AL 36532
Catalog $1.00

Otto Frei & Jules Borel
126 2nd St., Dept. WJ89
Oakland, CA 94604
Catalog $2.00

Klockit, Inc.
P.O. Box 542, Dept. WJ109
Lake Geneva, WI 53147
Catalog free

S. LaRose
P.O. Box 21208
234 Commerce Place
Greensboro, NC 27420
Catalog $2.50

Mason & Sullivan
Dept. 3975
586 Higgins Crowell Road
West Yarmouth, MA 02673
Catalog $2.00

Newport Enterprises
2313 West Burbank Boulevard
Burbank, CA 91506
Catalog free

Steebar
Box 980-E
Andover, NJ 07821-0980
Catalog $3.00

Turncraft, Inc.
Dept. WJ89
825 Boone Ave.
Golden Valley, MN 55427
Catalog free

NEW MODEL!
ScrollMate
21" ScrollMate Scrollsaw

• BIG Capacity -21" Throat depth, full 2" depth-of-cut.
• 5-Speeds —170, 450, 790, 1140 & 1370 strokes-per-minute — Handles a variety of materials.
• Built-in Air Bellows (standard).
• HUGE, Tilting Table (14" x 22-1/2").
• Smooth, Quiet Operation.
• Sturdy Steel Stand (included).
• Durable Construction—Made of rugged cast aluminum for a lifetime of dependable service.
• Value-Priced—One of the best scrollsaw bargains you'll find!

LIMITED 2-YEAR WARRANTY

SEND TODAY FOR YOUR Free FACT KIT

SAKURA USA

Send your mail-in inquiry to:
P.O. Box 710-CD
Xenia, Ohio 45385
Or call TOLL-FREE — 1-800-533-3728
Dealer Inquiries Invited

PERFECT MITERS

Glass-smooth cuts
ANY WOOD: soft or hard
ANY ANGLE: 45° to 90°

Miters can tell your story:

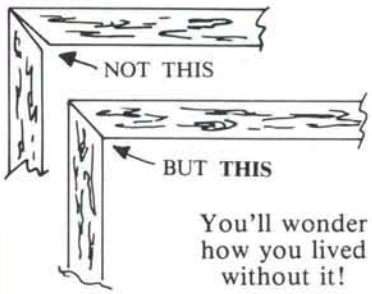

You'll wonder how you lived without it!

Write or Call
POOTATUCK CORPORATION
Box 24, Dept. WJ899 • Windsor, VT 05089
(802) 674-5984

NAME _____
ADDRESS _____
CITY/STATE/ZIP _____

FOLEY BELSAW 4 POWER-FED TOOLS IN 1

Plane • Mold • Saw • Sand

FACTORY DIRECT

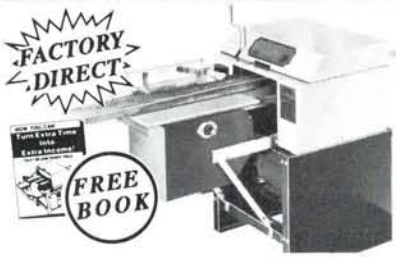

FREE BOOK

Now you can use this ONE power-feed shop to turn rough lumber into moldings, trim, flooring, furniture - All popular patterns, Rip-Plane-Mold & Sand ... separately or in combination with a single motor. Low Cost ...You can own this power tool for only $50 DOWN!

30 DAY FREE TRIAL!

RUSH COUPON TODAY!

FOLEY BELSAW
Foley-Belsaw Co.
6301 Equitable Rd.
Dept. 91479
Kansas City, Mo. 64120

☐ YES Please send me complete facts about PLANER-MOLDER-SAW-SANDER and details about 30-Day trial offer.

Name _____
Address _____
City _____
State _____ Zip _____

EAGLE T.M.
AMERICA
ROUTER BITS
Free Catalog

Send for the complete mail-order catalog featuring over 700 different router bits and accessories. (Dealer inquiries invited.)

☐ Send me a FREE catalog via 3rd class mail. (Allow 4-6 week delivery.)

☐ RUSH me a copy TODAY via first class mail. I've enclosed a check for $3.00 for special postage and handling.

BONUS - You will receive with your catalog a $5.00 refund good towards your first purchase.

MAIL COUPON TO: *Eagle America* WJ
BOX 1099 CHARDON, OH. 44024

Name _____
Address _____
City _____ State _____ Zip _____

MLCS Ltd.

CONTROL THE SPEED OF YOUR ROUTER - ROUT AT THE SPEED THAT GIVES THE BEST RESULTS WITH THE WOOD AND BIT YOU ARE USING!

NOW ONLY **$39.95** Order Item #200

FEATURES:

- **Speed Adjustable from Full Speed to 0 RPM**
- **Full Horsepower and Torque at All Speeds**
- **Go Back and Forth from Any Pre-Set Speed to Full Speed at the Flip of a Switch**
- **Works with All Routers 3 HP or Less**
- **120V 15 Amp**
- **Gives Your Router a Feature Only Available on Routers Costing Hundreds of Dollars!**
- *Less Tear Out*
- *Stops Burning*
- *Feed at Comfortable Rate*
- *Better, Safer Results with Large Diameter Bits*
- *Less Wear on Bits*
- *Less Noise and Softer Starts at Lower Speeds*

EASY TO USE - Simply plug in Speed Control and plug your router into the Speed Control - turn dial for best results. (Speed Control has a clip that can be worn on your belt or hung on wall or left loose.)

- Reduces speed electronically without reducing torque; electronic feed-back maintains speed by increasing voltage to motor as load increases.

CARBIDE TIPPED ROUTER BITS PROFESSIONAL PRODUCTION QUALITY *GUARANTEED*

WHEN ORDERING ANY THREE OR MORE DEDUCT $1.00 EACH. ALL PRICES ARE POSTAGE PAID

ITEM NO.	BEST CUT BEST PRICE	DESCRIPTION	ANGLE/DEPTH/RADIUS CIRCLE DIAMETER	LARGE DIA.	CUTTING LENGTH	SHANK SIZE	PRICE
#490		1¼" **Classical**		1¼"	⅝"	¼"	$25.00
#491		1½" Classical		1½"	¾"	¼"	$25.00
#792		1½" Classical		1½"	⅞"	½"	$25.00
#231		5/32" **Roman Ogee**	5/32" R	1¼"	15/32"	¼"	$17.00
#232		¼" Roman Ogee	¼" R	1½"	¾"	¼"	$18.00
#661		¼" Roman Ogee	¼" R	1½"	¾"	½"	$21.00
#340		⅛" **Cove**	⅛" R	⅝"	½"	¼"	$12.00
#341		¼" Cove	¼" R	1"	½"	¼"	$13.00
#342		⅜" Cove	⅜" R	1¼"	9/16"	¼"	$14.00
#343		½" Cove	½" R	1½"	⅝"	¼"	$15.00
#644		¾" Cove	¾" R	1⅞"	¾"	½"	$28.00
#350		⅛" **Round Over**	⅛" R	¾"	½"	¼"	$11.00
#351		3/16" Round Over	3/16" R	⅞"	½"	¼"	$11.00
#230		¼" Round Over	¼" R	1"	½"	¼"	$12.00
#354		⅜" Round Over	⅜" R	1¼"	⅝"	¼"	$15.50
#355		½" Round Over	½" R	1½"	¾"	¼"	$17.00
#656		¾" Round Over	¾" R	2"	⅞"	½"	$21.00
#657		1" Round Over	1" R	2½"	1"	½"	$33.00
#370		⅜" **Rabbeting**	⅜" Deep	1¼"	½"	¼"	$14.00
#670		⅜" Rabbeting	⅜" Deep	1¼"	½"	½"	$14.00
#366		⅛" **Slot Cutter**	⅜" Deep	1¼"	⅛"	¼"	$14.00
#368		¼" Slot Cutter	⅜" Deep	1¼"	¼"	¼"	$14.00
#403		⅜" **Dovetail**	9 degree	⅜"	⅜"	¼"	$ 7.50
#405		½" Dovetail	14 degree	½"	½"	¼"	$ 8.50
#409		¾" Dovetail	14 degree	¾"	⅞"	¼"	$10.50
#709		¾" Dovetail	14 degree	¾"	⅞"	½"	$10.50
#402		⅜" Dovetail	8 degree For	⅜"	½"	¼"	$12.00
#404		½" Dovetail	8 degree Leigh	½"	13/16"	¼"	$12.00
#708		11/16" Dovetail	8 degree Jigs	11/16"	1"	½"	$17.50

ITEM NO.	BEST CUT BEST PRICE	DESCRIPTION	ANGLE/DEPTH/RADIUS CIRCLE DIAMETER	LARGE DIA.	CUTTING LENGTH	SHANK SIZE	PRICE
#415		¼" **Core Box**	round nose	¼"	¼"	¼"	$10.00
#416		⅜" Core Box	round nose	⅜"	⅜"	¼"	$11.00
#417		½" Core Box	round nose	½"	11/32"	¼"	$14.00
#418		¾" Core Box	round nose	¾"	⅝"	¼"	$15.00
#719		1" Core Box	round nose	1"	¾"	½"	$18.00
#470		¼" **Straight**	plunge cutting	¼"	¾"	¼"	$ 7.00
#471		5/16" Straight	plunge cutting	5/16"	1"	¼"	$ 7.00
#472		⅜" Straight	plunge cutting	⅜"	1"	¼"	$ 7.00
#474		½" Straight	plunge cutting	½"	1"	¼"	$ 7.00
#775		½" Straight	plunge cutting	½"	2"	½"	$14.00
#476		9/16" Straight	plunge cutting	9/16"	1"	¼"	$ 7.00
#478		⅝" Straight	plunge cutting	⅝"	1"	¼"	$ 8.00
#479		¾" Straight	plunge cutting	¾"	1"	¼"	$10.00
#781		1" Straight	plunge cutting	1"	1½"	½"	$12.00
#500		⅜" **Flush**	**Trimming**	⅜"	½"	¼"	$ 7.00
#502		½" Flush	Trimming	½"	½"	¼"	$ 7.50
#503		½" Flush	Trimming	½"	1"	¼"	$ 8.50
#804		½" Flush	Trimming	½"	13/16"	½"	$ 9.00
#545		**Tongue & Groove**	Straight	1⅝"	1"	¼"	$30.00
#845		Tongue & Groove	Straight	1⅝"	1"	½"	$30.00
#546		Tongue & Groove	Wedge	1 3/16"	1"	¼"	$30.00
#846		Tongue & Groove	Wedge	1⅝"	1"	½"	$30.00
#450		⅛" **Beading**	⅛" R	¾"	½"	¼"	$11.00
#451		3/16" Beading	3/16" R	⅞"	½"	¼"	$11.00
#233		¼" Beading	¼" R	1"	½"	¼"	$13.00
#453		5/16" Beading	5/16" R	1⅛"	½"	¼"	$14.00
#454		⅜" Beading	⅜" R	1¼"	⅝"	¼"	$15.50
#455		½" Beading	½" R	1½"	¾"	¼"	$17.00
#375		**45 degree**	45 degree	⅝"	1½"	¼"	$15.00
#676		**Chamfer**	45 degree	⅞"	1⅞"	½"	$23.00

New 24-page catalogue now available, featuring hundreds of bits.

MAKE BEAUTIFUL RAISED PANEL DOORS . . . WITH YOUR 1/4" ROUTER!

SET ALSO AVAILABLE IN ½" SHANK - $79.95 - Item #852

SAVE 55%

Professional production quality bit makes it quick and easy to produce matching rails and stiles — the panel raising bit with ball bearing guide makes the raised panel perfect every time.

SALE PRICE **$69.95** FOR COMPLETE SET

Regular value Over $150.00

ORDER ITEM # 554 for 1/4" Shank Set (Includes all bits shown)

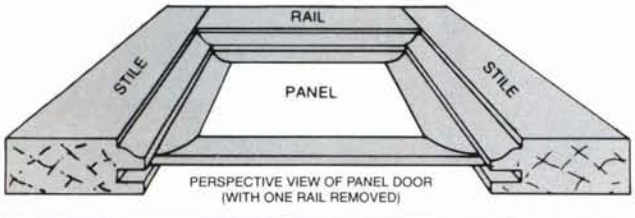

PERSPECTIVE VIEW OF PANEL DOOR (WITH ONE RAIL REMOVED)

RAISED PANEL BIT SUPPLIED WITH BALL BEARING

REVERSIBLE COMBINATION RAIL and STILE BIT

(For making matching rails and stiles in raised panel doors, etc.) Works with stock from 11/16" to 7/8" thick

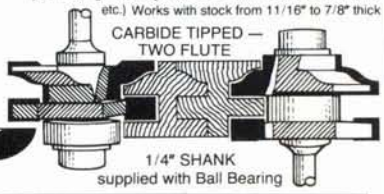

To order by Master Charge or Visa Call Toll Free, 7 Day - 24 Hour Order Service

1-800-533-9298 or send check to: **MLCS Ltd., P.O. Box 4053JF, Rydal, PA 19046**

Events

We will gladly list as many events of interest to woodworkers as space permits. Listings are free and may include shows, fairs, competitions, workshops and demonstrations. The deadline is six weeks before publication, September 15 for the November/December issue. Please address announcements to the Events Department.

California:

Artistry in Wood '89, Aug. 25 - Oct. 29, Sonoma County Museum, 425 Seventh St., Santa Rosa. For more information call (707) 579-1500.

The Woodworking Shows, Northern California, Oct. 6-8, Cow Palace, San Francisco. For more information call 1-800-826-8257.

The Woodworking Shows, Southern California, Nov. 10-12, L.A. County Fairgrounds, Pomona. For more information call 1-800-826-8257.

Woodworking Across America, Oct. 6-8, County Fairgrounds, Ventura. For more information call 1-800-322-WOOD.

Connecticut:

Brookfield Craft Center, Weekend Workshops: Sept. 16-17, Making Multiples: Chairs and Tables; Sept. 23-24, Sign Carving Workshop; Sept. 30 - Oct. 1, Furniture Construction Workshop; Oct. 7-8, 18th-Century Woodworking Techniques; Oct. 14-15, Bent Laminations Workshop; Oct. 21-22, Making a Shoji Screen; Oct. 28-29, Making a Table; Nov. 11, Table Saw Techniques I; Nov. 12, Table Saw Techniques II. Evening Workshops: Sept. 20-Nov. 8, Woodworking with Power Tools; Sept. 21 - Nov. 9, Evening Woodworking in Brookfield; Sept. 20 - Nov. 8, Evening Woodworking in South Norwalk (South Norwalk campus). For more information contact the center at P.O. Box 122, 286 Whisconier Rd., Brookfield, CT 06804; (203) 775-4526.

Guilford Handcrafts Center, 11th Annual Holiday Exposition, Nov. 4 - Dec. 23, Mill Gallery and The Shop, 411 Church St., Guilford. For more information call (203) 453-5947.

Mendelson Gallery, Titus Square, Washington Depot, Sept. 2 - Oct. 28: Furniture by Silas Kopf, Peter Dean, Michael Coffey, Howard Werner and Jamie Robertson. For more information call (203) 868-0307.

Florida:

The Woodworking Shows, Central Florida, Oct. 27-29, Cutix Hixson Convention Center, Tampa. For more information call 1-800-826-8257.

Georgia:

26th Annual Festival of the Arts and Crafts, Sept. 23-24, 520 West Waugh St., Dalton. For more information call (404) 278-0168.

Illinois:

Woodworking World — The Chicago Area Show, Oct. 6-8, The Metro Center, Rockford. For more information call 1-800-521-7623.

Indiana:

Chautauqua of the Arts Outdoors Craft Festival, Sept. 23-24, Lanier State Historic Site, Madison. For more information call (812) 265-5080.

Woodworking Across America, Oct. 20-22, State Fairgrounds, Indianapolis. For more information call 1-800-322-WOOD.

Maryland:

The Woodworking Shows, Baltimore/Washington, Oct. 13-15, Baltimore Convention Center, Baltimore. For more information call 1-800-826-8257.

Massachusetts:

Woodworking World — The New England Show, Oct. 20-22, Eastern States Exposition Center, West Springfield. For more information call 1-800-521-7623.

Worcester Center for Crafts, 25 Sagamore Road, Worcester. Sept. 22 is the deadline for submitting work to "Woodturners of the Northeast," Feb. 10 - March 17, 1990. For more information call (508) 753-8183.

Michigan:

The Woodworking Shows, Metro-Detroit, Sept. 22-24, Cobo Hall, Detroit. For more information call 1-800-826-8257.

Minnesota:

The Woodworking Shows, Twin Cities, Sept. 15-17, St. Paul Civic Auditorium, St. Paul. For more information call 1-800-826-8257.

Missouri:

The Kansas City Woodworkers' Guild Fifth Annual Show, Wood 1989, Oct. 7-15, Crown Center Exhibition Hall, 2450 Grand Avenue, Kansas City.

New York:

Woodworking World, The New York Show, Oct. 27-29, Westchester County Center, White Plains. For more information call 1-800-521-7623.

Woodworking World, The Central New York State Show, Nov. 3-5, The N.Y. State Fairgrounds, Syracuse. For more information call 1-800-512-7623.

Woodstock — New Paltz Arts and Crafts Fair, Sept. 2-4, Ulster County Fairgrounds, New Paltz. For more information call (914) 679-8087.

North Carolina:

Woodworking World, The Carolina Show, Sept. 22-24, M.C. Benton Convention Center, Winston-Salem. For more information call 1-800-521-7623.

Penland School, Sept. 7-10, American Craft Council Southeastern Assembly Conference; Sept. 18 - Oct. 13, Robert Ingram on Furniture Making. For more information contact the Penland School, Penland; (704) 765-2359.

Ohio:

American Contemporary Works in Wood '89, Sept. 16 - Oct. 15, The Dairy Barn Cultural Arts Center, Dairy Lane, Athens. For more information call (614) 592-4981.

The Woodworking Shows, Greater Cincinnati, Sept. 8-10, Cincinnati Convention Center. For more information call 1-800-826-8257.

Woodworking World — The Cleveland Show, Oct. 13-15, International Exposition Center, Cleveland. For more information call 1-800-521-7623.

Woodworking Across America, Nov. 17-19, State Fairgrounds, Columbus. For more information call 1-800-322-WOOD.

Oregon:

Oregon School of Arts and Crafts: Oct. 29, Sculptural Marquetry with Tom Allen, 8245 S.W. Barnes Rd., Portland. For more information call (503) 297-5544.

The Woodworking Shows, Oregon, Nov. 3-5, Memorial Coliseum, Portland. For more information call 1-800-826-8257.

Pennsylvania:

Olde Mill Cabinet Shoppe: Sept. 16-17, Michael Dunbar on building a Writing Arm Windsor Chair; Oct. 6-8, Tage Frid on Contemporary Furniture Design and Construction; Oct. 21, Ralphe Durmotte on Traditional Upholstery; Nov. 11-12, Wayne Barton on Chip Carving. For more information contact the shop at 1660 Camp Betty Washington Road, York; (717) 755-8884.

Woodworking World, The Central Pennsylvania Show, Nov. 17-19, State Farm Complex, Harrisburg. For more information call 1-800-521-7623.

The Woodworking Shows, Pittsburgh Tri-State, Oct. 20-22, Pittsburgh Expomart, Pittsburgh. For more information call 1-800-826-8257.

Washington:

Third Annual National Symposium of the American Association of Woodturners, Oct. 13-15, Overlake School, Seattle. For more information call (317) 841-9312.

The Woodworking Shows, Western Washington, Sept. 29 - Oct. 1, Seattle Center, Seattle. For more information call 1-800-826-8257.

Wisconsin:

Woodworking Across America, Milwaukee Show, Sept. 15-17, The Mecca, Milwaukee. For more information call 1-800-322-WOOD.

MOUNT LEBANON SHAKER VILLAGE

A Museum in the Making

The late morning sun streams in through the wide windows to reveal the cracked plaster walls and a few old tools scattered about: a cast iron wood lathe, an immense workbench, a drill press, and an ancient wooden table saw.

But people here in Mount Lebanon Shaker Village are hoping the room will soon be filled with the Shaker tools and implements that once won this place worldwide fame as a chairmaking center.

"You're actually in the space where they were doing this stuff," said Mount Lebanon Shaker Village Director Andy Vadnais, who hopes to open a chairmaking exhibit in the room by June 1990. It was Mount Lebanon that in essence brought the Shaker chair to the world, or at least to the world's furniture showrooms.

Yet the Mount Lebanon Shaker Village is in its infancy as a Shaker museum. The site, in the lush rolling hills east of Albany, New York, is owned by Darrow School, a boys' boarding school, and has remained undeveloped while similar sites have been restored. Hancock Shaker Village, just across the border in Massachusetts, was a smaller Shaker settlement, but is now a popular museum.

"There really aren't any sites like this that are in the beginning stages of restoration," said Assistant Director Richard D. Chavka.

The Mount Lebanon Shaker village here is also famous as the first of the organized Shaker communities, and the spiritual center of the Shaker world. In many ways Mount Lebanon is the most important site in the history of the Shakers. Mount Lebanon was actually the first stop on the primary pilgrimage of the founding Shaker, Mother Ann Lee, who came to the United States with eight followers from England and converted local farmers at a revival meeting held in a field here. The farmers subsequently donated their lands to the cause and that land became the foundation of Mount Lebanon Shaker Village. Later, other neighboring farmers also converted and the village grew to be the largest of the Shaker communities, with more than 600 members. From Mount Lebanon, church leaders set the policy that ruled Shaker communities across the country.

"The property is a national landmark. It's just been *passed over* for years and years and years," said Tim Rieman, who with Charles R. Muller co-authored *The Shaker Chair,* a book that delves into the development of the famous chairs. Rieman is working with the Shaker Village staff on the restoration project. Rieman also makes Shaker reproduction furniture in his own shop, located on the grounds of the village, but not officially connected with the museum.

In fact, unofficial connections are a refreshing change of pace here. So far, the Shaker Village consists of a small group of people genuinely intrigued by what they're finding buried underground or simply lying in dark corners of boarded up buildings. The Darrow students pitch in on restoration projects, with some of the work for credit and some clearly just for the fun of it. The museum itself consists mostly of a single room filled with Shaker furniture and artifacts. Visitors find the informal atmosphere and small staff a change from most museums. Vadnais hopes that Mount Lebanon eventually grows to become a major center for historical and archaeological research into the Shakers. But the current project is more modest — to re-create the Shaker chair shop and illustrate how technological change influenced the Shakers.

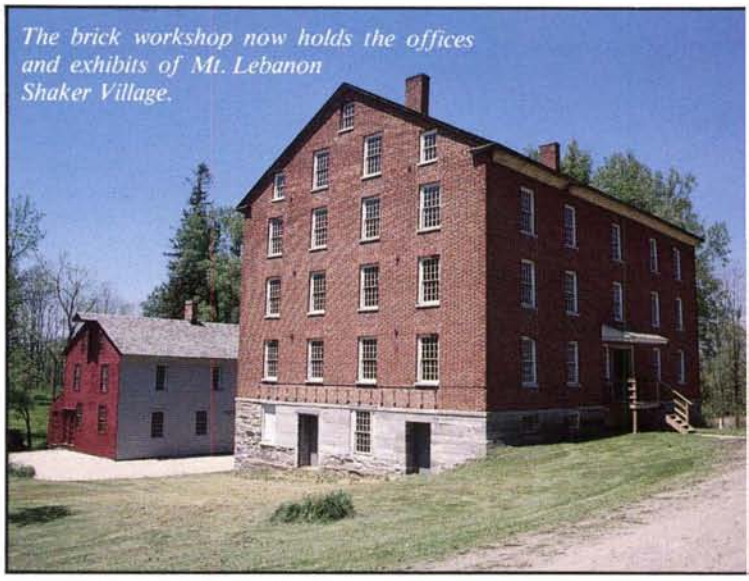

The brick workshop now holds the offices and exhibits of Mt. Lebanon Shaker Village.

The main focus of the exhibit will be to show the evolution of the chairmaking by having two side-by-side displays. In one, Shaker hand-tool operations will show chair construction aided by only a few simple jigs, such as a jig to position chair-rung mortises at a precise 94-degree angle from an initial series of holes.

In the second exhibit, the museum will show how the Shakers made the chairs using production equipment in their own factory. That equipment includes early production lathes, mortising machines and drill presses, much of which the Shakers bought from the outside world. Rieman and Vadnais want to document that evolution, which was largely a change from hand-tool operations with simple machines to factory production.

Rieman and Vadnais are hoping that they can find some of the production equipment used by the Shakers. The museum is looking for period equipment that fits the descriptions the Shakers gave in their diaries. It's also possible that the museum may find some of the equipment actually used by the Shakers at Mount Lebanon. Rieman and Vadnais hope some of the old machinery is still in the nearby community.

"There may be Shaker machinery out there that we just don't know about," Rieman said. Unfortunately, World War II took its toll on the stock of old machinery, and much of it was melted down. Rieman is looking for woodworking machinery built from about 1840 to 1900.

But even more scarce than the production equipment are the tools for the earlier hand-production system. "My guess is I won't be able to find the earlier jigging to make the handmade chairs," Rieman said.

Instead, Rieman's research will provide the descriptions of the methods and tools used to produce the earlier chairs. Fortunately, the Shakers kept extensive journals and diaries, which are available for historical research. "They were a people who were aware of their history and wrote everything down," Vadnais said.

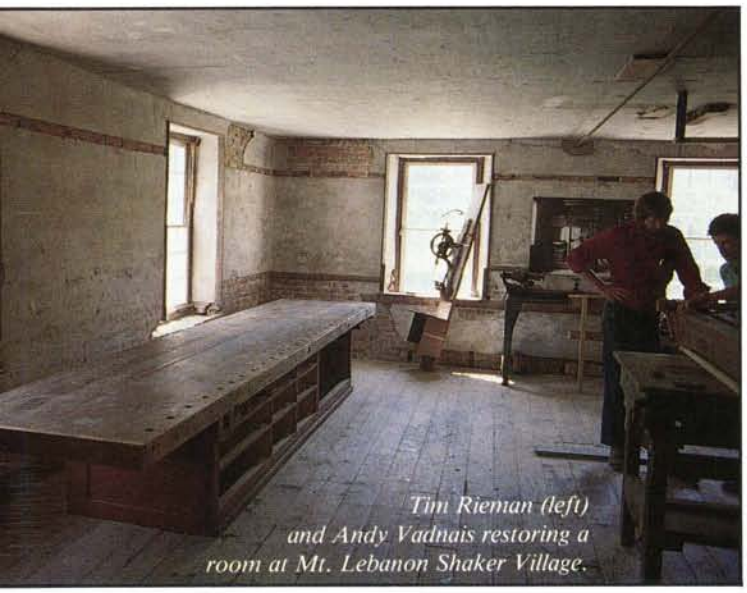

Tim Rieman (left) and Andy Vadnais restoring a room at Mt. Lebanon Shaker Village.

In the journal of one 19th-century Shaker chairmaker, Freegift Wells, Rieman has found a wealth of information on chairmaking, including early efforts to develop production woodturning equipment. Wells developed his own lathe to do repetitive turnings and his journal describes his efforts. "Turned again this forenoon and 100 after dinner. We found we could turn 100 chair rounds in less than an hour," he wrote. Rieman says that Wells and other Shaker chairmakers were developing these techniques in the years before the start of full factory production. Often the journal entries provide information that is tantalizing, but lacking in detail. "I made the mortising machine for my chair shop," Wells wrote in his journal. "Well what was it like? They're fun but frustrating," Rieman said.

The evolution of chairmaking into an industry actually began in one section of the village. The Shaker village was divided into family groups, each with its own compound of buildings on the 382-acre Mount Lebanon site. The family group names were taken from their location in relation to the main family, called the Church Family. It was at one of the family groups here that chairmaking evolved from a small-scale craft enterprise into a large business. At the time, an enterprising young Shaker by the name of Robert Wagon was in charge of the South Family chairmaking business. He built the enterprise into a manufacturing business that became so large and successful that production topped 3,000 chairs a year. Wagon and the South Family Shakers built the first Shaker chairmaking factory in 1872, spending what must have been a small fortune at the time on machinery. The Shakers bought $25,000 worth of machinery for the South Family factory, plunking down $1,000 just for the steam engine alone, according to *The Shaker Chair*. And when the Shakers bought machinery, they generally bought the most advanced available.

"They liked machines, they were progressive folks, they used machines," Rieman said.

Rieman and Vadnais emphasized that the Shakers were a complex people with a way of looking at the world that may seem incongruous to people today. They were very progressive, and in a way worldly, when it came to developing their manufacturing plants and even their horticulture. For example, Vadnais said the Shakers were avid readers of *Scientific American* and quick to take up any idea that seemed to make sense to them. But at the same time they advocated a simple lifestyle and an other-worldly spiritualism.

Vadnais said that Shaker museums now mostly portray the Shakers without exploring the complexities of cultural change that for a time fostered their growth, and that may have led to their demise. The Shakers were much more than quaint people who made elegant furniture.

It's that change that Vadnais and Rieman want to document at Mount Lebanon. And the undeveloped site seems ideally suited to the purpose. There are standing Shaker buildings and intact furnishings, there are ruins to excavate, there are miles and miles of underground aqueducts still intact, there are unexplored crevices everywhere. And there are reams of pages of diaries the Shakers left behind.

"We can reconstruct everything that went on here year by year and watch it change," Vadnais said.

The Shaker Village has another asset in its efforts, one that Vadnais said he wants to use even more in the future. The Darrow students offer an immense opportunity to use the site for educational as well as historical exploration. He said the students already are eager to take the history course he offers at the school and that they seem to react with enthusiasm to working on a real research project. Vadnais said he's hoping to expand the cooperation between the school and the Shaker Village, to the point where the Shaker Village becomes a major focus of the school's educational program.

"A working historical preservation program with an ongoing secondary school. The things we'll be able to do are just incredible," Vadnais said.

Vadnais also hopes to attract more visitors to the site. In future years he's hoping to open a small inn and have the village restored as a working settlement.

"It would be phenomenal for New York State to have a working site like this," Vadnais said.

The museum is open 9:30 a.m. to 5 p.m. every day from Memorial Day to Labor Day. From Labor Day to October 31, it's open on Friday, Saturday and Sunday. The museum is also open by appointment year-round.

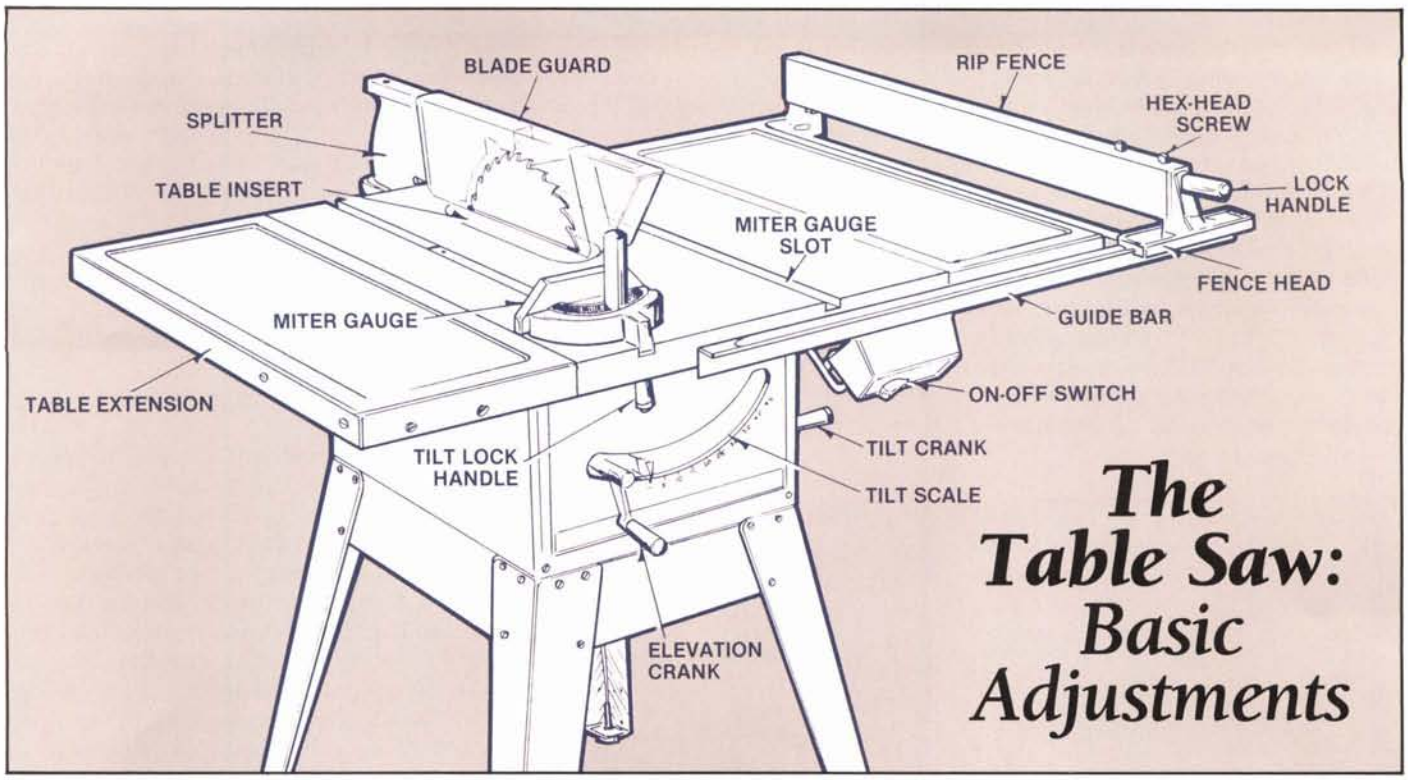

The Table Saw: Basic Adjustments

The purpose of this article is to help you get your table saw, miter gauge and rip fence properly adjusted. The setup procedure applies not only to used saws, but to a new saw fresh out of the box. Don't assume that because the tool hasn't been used it's perfectly adjusted. Check your saw regularly for accuracy, and repeat these basic adjustments as needed.

There are two basic settings that all table saws feature. The elevation crank, usually located at the front of the saw, elevates and lowers the saw blade to control the depth of cut. The tilt crank, usually located on the right side (when you are facing the front of the saw), tilts the saw blade over to a maximum of 45 degrees for bevel or miter cuts. Some blades tilt to the right, others to the left. A few saws feature a table that tilts, rather than the blade, but these are the exception.

Most table saws utilize a system where the motor, motor base, and saw arbor are all fastened to a cradle. The cradle is mounted to the saw table on trunnions, so that the entire motor and cradle assembly pivots on the trunnions as the saw blade is tilted. The saw shown above operates this way.

There are three primary adjustments that involve the saw table and the cradle. Note that if you have an older saw, it should be thoroughly cleaned before beginning this tune-up.

Paralleling the Blade: The first adjustment that you'll need to make is to align the saw blade so it's parallel to the miter gauge slots. If possible, use a new blade to avoid a situation where

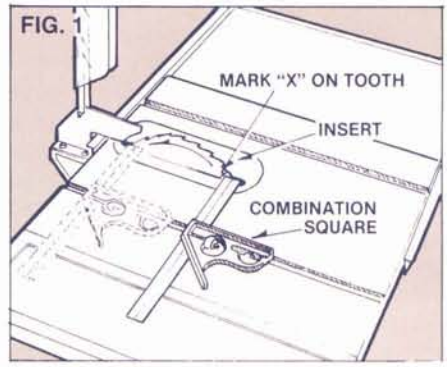

the blade itself — and not the saw table — may be the problem. With the saw turned off *and* unplugged, raise the blade to its maximum height. Using a felt-tip pen, mark the side of one tooth on the blade. Now take a combination square, locate it in the miter gauge slot on the side of the blade with the marked tooth, adjust the square until it just touches that tooth, and lock it in that position (Fig. 1). Remove the combination square, rotate the saw blade so the marked tooth is flush with the back of the slot in the insert, and reposition the square in the miter gauge slot. The marked tooth should again just touch the end of the square. If there's a gap, or if the fit is too tight, then the cradle needs adjusting.

Most cradles are mounted to the saw table with a front and rear trunnion, each held with several screws or bolts. On the Sears saw, for example, there

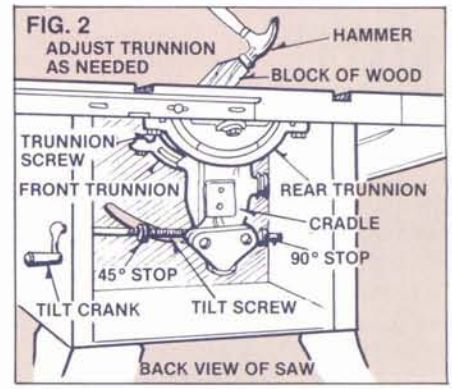

are six screws. After removing the blade, loosen these screws and then use a hammer and a block of wood to tap the rear trunnion left or right as needed

to align the blade to the table (Fig. 2). Don't use the hammer without a block of wood or you'll risk cracking the trunnion casting. Although the front trunnion can also be moved, it shouldn't be necessary. Recheck the blade as before with the combination square. When the distance between the marked tooth and the miter gauge slot is identical both front and back, tighten the trunnion screws. Check the distance again after tightening. Note that with certain saws you'll adjust the saw table itself, rather than the cradle.

The 90-Degree Blade Setting: The second adjustment that you need to make is to set the saw blade so that it's square (at 90 degrees) to the table. This is checked with the try square, with the blade raised to its maximum height

FIG. 3

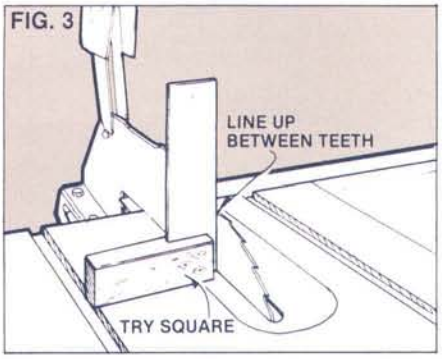

(Fig. 3). Remove the table saw insert if it is not perfectly flush with the table surface. Any protrusion above the surface is likely to throw off your setting. Also, thoroughly clean the 45-degree and 90-degree stop collars, and the threads of the tilt screw.

You'll need to loosen the tilt-lock handle in order to operate the tilt crank. Make sure that the teeth on the saw blade are not interfering with the edge of the try square and keeping it from resting flush with the blade side. If the saw blade is not at 90 degrees to the table, and it seems like it has been cranked over as far as it will go, then you'll need to back off the 90-degree stop collar a few turns. First, loosen the two setscrews holding the stop collar and then back it off. Turn the handle on the tilt crank as needed to get the blade perfectly flush with the edge of the try square. Note that the try square should be checked for accuracy with a machinist's square or another very accurate tool before it is used for this operation. Once the setting is exact, rotate the 90-degree stop collar until it contacts the tilt nut, and tighten the setscrews. Adjust the pointer on the tilt scale to "0."

The 45-Degree Blade Setting: The third adjustment is to fine-tune the 45-degree stop collar so that the blade will stop at 45 degrees. Use a drafting

FIG. 4

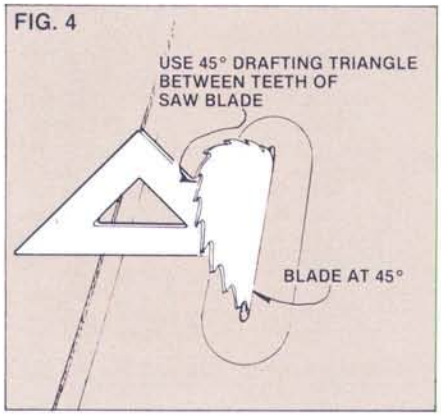

triangle to check the setting (Fig. 4). You shouldn't use the combination square for this setting since the small flat of the square will have to rest on the table saw insert, which may not be as flat as the saw table. (As with the 90-degree setting, don't use the table saw insert if it protrudes above the table surface at any point.) Loosen the setscrews of the 45-degree stop collar, adjust the collar as needed, and then tighten the setscrews. If the scale on your saw is accurate, and the pointer was zeroed when you set the blade square to the table, then it should read exactly 45 degrees on the scale. If it doesn't read 45 degrees and your stop collar setting is accurate, don't worry. It's probably the scale that's off.

Miter Gauge Settings: Next, you'll need to set the miter gauge so that it's square to the blade and the miter gauge slots. Use a framing square as shown in Fig. 5. By fitting a block of wood into the miter gauge slot, you can lay the framing square flat on the saw table and butt it against the block. However, make certain that the block fits the miter gauge slot exactly, with no play. Save this block; you'll use it whenever you make this adjustment. Now crosscut a board at least 6 in. wide, and

FIG. 5

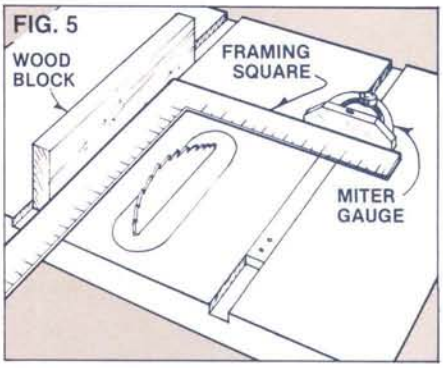

check the cut end with the square. The end should be a perfect 90-degree cut. Adjust the pointer on the miter gauge to "0" and lock it in place.

If the scale on the miter gauge is accurate, then when you adjust the miter gauge to 45 degrees you should get a perfect 45-degree cut. Crosscut the ends of two boards at the 45-degree setting, join the mitered ends to form a right angle, and then check with the framing square. Any problem will be evident. If the miter gauge on your saw includes stop settings, lock them in place after you get the miter gauge adjusted just right.

Rip Fence Setting: Ideally, your rip fence should automatically lock in place parallel to the blade and the miter gauge slots. For it to operate properly the fence itself should clear the table slightly. Sears recommends a distance of about $\frac{1}{32}$ in. Loosen the screws holding the front guide bar and adjust it up or down. Also adjust the rear guide bar as needed to maintain the $\frac{1}{32}$ in. clearance along the length of the rip fence.

To check that the rip fence is parallel to the miter gauge slots, move it adjacent to the right side slot and tighten the lock handle. If the fence skews off slightly to the left or right as it is tightened, then it needs adjusting. Loosen the two hex-head screws in the fence head, hold the fence tight against the front guide bar, parallel the fence to the miter gauge groove, and alternately tighten the screws to lock the position.

Finally, raise the saw blade to maximum height, butt the rip fence against the right side of the blade, and set the pointer to "0" on the front guide bar scale.

ORDER TOLL FREE 1-800-288-7297 Extention 90

Professional Quality Woodworking Machines At Affordable Prices

SAW STAND On Sale! reg..$39.00 Now Only $26.00

New Low Price...

Super 15" Scroll Saw

On Sale... **$119.95**

Cut intricate wood patterns easily with this versatile machine. ***Many extras*, including:**

- **Accessory package now worth $ 52.00**
- **New "E-Z Set" Blade change system**

Add $10 UPS Freight

FEATURES:

- **Parallel Rocker Arm Cutting System:** Drives the blade up and down, avoids blade breakage, polishes as it cuts, eliminates sanding.
- **"E-Z Set" Blade change system:** Clamps any thickness blade (down to "000" size) easily into the "E-Z Set" pivoting blade holders mounted permenently on the saw arms. Simplifies reattaching blades especially when making internal cuts.

SPECIFICATIONS:

- **Construction** ..... Cast Iron
- **Throat depth** ..... 15"
- **Max depth of cut** ..... 2"
- **Machine weight** ..... 43 lbs
- **Motor** - Heavy duty totally enclosed fan cooled 110-120V, UL listed, ball bearing induction motor
- **Blades** - uses 5" standard & pinend
- **Stroke length** ..... 3/4"
- **Cut Speed**..... 1650/min
- **Table tilt** .....0 - 45° to left

Options: Dust Blower & Saw Stand

Free with Purchase of Saw

- *12 Blade Assortment* ..... **$ 3.50 value**
- *Extra Std. Blade Holder set*.... **8.50 value**
- *E-Z Set blade change system*..**15.00 value**
- *Neptune 1-1/2" plastic Lettering guide set & patterns*..... **25.00 value**

FREE ... $52.00 VALUE

Scroll Saw and Accessories Price List

(Compatible with Penn State Super 15" Saw and Scroll Saws of similar design)

Super 15" Scroll Saw - complete & assembled
#SAW..... **$119.95** ($10 UPS)

Dust Blower
Keeps your pattern line visible at all times, Our most popular accessory. Installation instructions included.
#BKT ..... **$ 15.00/kit** (•)

Scroll Saw Stand
37" high, drilled to align with saw, great convenience.
#STD ..reg $39.00, **On Sale**.... **$ 26.00** ($4 UPS)

Scroll Saw Blades
#BPK - 4 dz asst (2dz Pinend, 2dz #9)..**$ 14.00** (•)
#BPS - 2 dz Spiral blades (size #2) .....**$ 10.00** (•)

"E-Z Set" Blade Change System
(Free with purchase of saw). Includes top & bottom holders, all hardware and instructions.
#RET ..... **$ 15.00/set** (•)

Neptune 1-1/2" plastic Lettering Guide Set
(Free with purchase of saw). Includes upper & lower case alphabet + numbers + FREE patterns.
#LN1... reg $25.00, **On Sale**....**$ 12.00/set** (•)

Foot Switch
7 amp, 6 ft cord. For hands free operation.
#FSW.....**$ 20.00/ea.** (*)

(•) No freight chg if ordered with Saw, $3.00 for any combination of these accessories ordered separately

Don't settle for less from importers selling stripped down versions of our Saw

Super 125 Planer

Portable with "Power Feed" • Shipped assembled • Retail value over $600.00

On Sale ... **$349.95**

Add $15 UPS Freight

This machine will pay for itself time and again by planing your own lumber. At 65 lbs, you can carry this Planer to a job site or mount it permanently in your workshop like any stationary machine. **You'll spend hundreds of dollars less** for this 12-1/2" power feed Planer than for a traditional stationary model of a similar capacity - with comparable results.

SPECIFICATIONS:

- **Knives**.... 2ea, 12-1/2" wide, HSS
- **Motor** - 16 Amp, 115V, 8000 RPM
- **Auto Feed rate** ..... 26.2 FPM
- **Cutting speed** ..... 16000 Cuts/min
- **Thickness of stock** ..... 3/16" to 6"
- **Size** ... 15-1/2"H X 22"W X 21" Bed
- **Max Depth of cut** ..... 1/8"

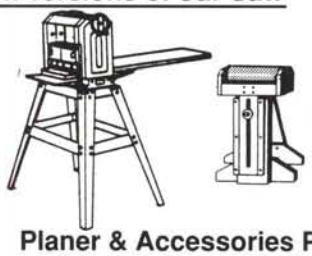

Free plans for roller stand with purchase of rollers

Planer & Accessories Price List

Super 125 Planer - complete and assembled
#PLA ..... **$ 349.95** ($15 UPS)

Extra Set of 2 Knives - High speed steel, 12-12"
#PKN ..... **$ 25.00/set** (•)

Dust chute - for vacuum takeoff of wood chips
#PDS ..... **$ 24.00** ($3 UPS)

Planer stand - Heavy duty, 27-1/2" high
#PST ..reg. $44.00, **On Sale**..... **$ 39.00** ($6 UPS)

Ball Bearing Rollers - (Minimum purchase 2 rollers) Build a roller stand, infeed/outfeed table etc. with these 13" X 2" Heavy Duty rollers. Purchase includes FREE plans for building the roller stand shown above.
#BBR ..... **$ 6.50/ea** ($3 UPS/per order)

(•) No frt chg if ordered w/Planer, otherwise add $3 UPS

DC-1 Dust Collector

On Sale ... **$189.95**

Keep your shop clean and safe from sawdust *with our large* capacity, commercial style system. This collector has up **to 10 times more air flow** than a Shop Vac and runs **much quieter.**

SPECIFICATIONS:

- **1hp, 110/220V (pre wired 110V)**
- **610 CFM air flow • 6990 FPM air speed**
- **2 Bags 15"dia X 22" • 20 gallon bag**
- **4" inlet • Casters on base**
- **Weight 75 lbs • Size - 26"x15"x57"H**

Free with Purchase of DC-1
20 Feet Of Duct Hose
4" To 3" Rigid Adaptor • 4" To 2" Flex Adaptor
Plans For 2 Stage Setup • Sources For Piping & Fittings
FREE ... $15.00 VALUE

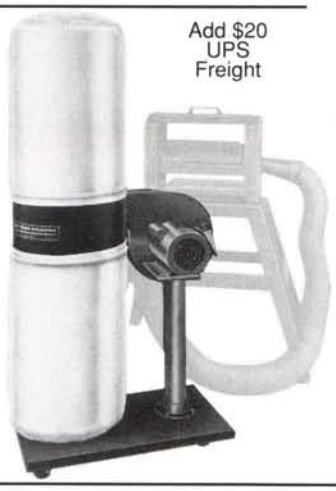

Add $20 UPS Freight

Penn State's Commitment

Our company has been in business for over 50 years. We unconditionally guarantee your satisfaction with our fine machines. All of our machines carry a Thirty day Money Back Guarantee and One year Warranty for Parts and Labor .

PENN STATE INDUSTRIES -J

2850 Comly Road • Phila, Pa 19154

Order Toll Free 1-800-288-7297 (Ext 90)

For information 1-215-676-7609 (Ext 15)

Visa, Master, & Discover Card accepted

Pennsylvania residents add 6% Sales Tax

Add UPS Shipping Charges as noted

Continental U.S. only (Call for shipping charges to other locations)

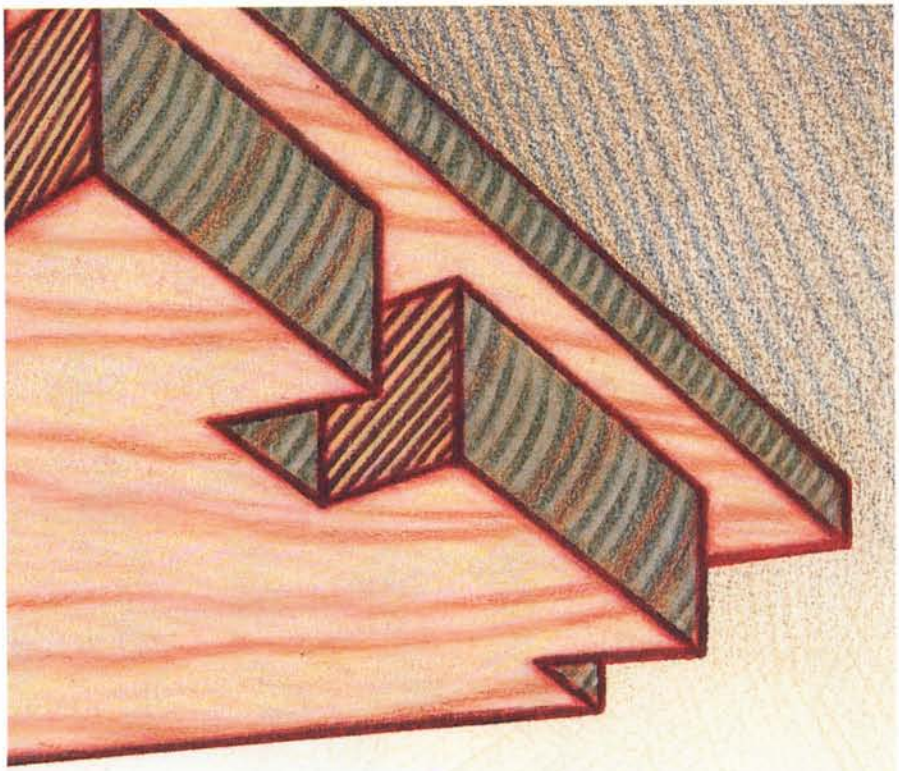

Cutting Full-Blind Dovetails

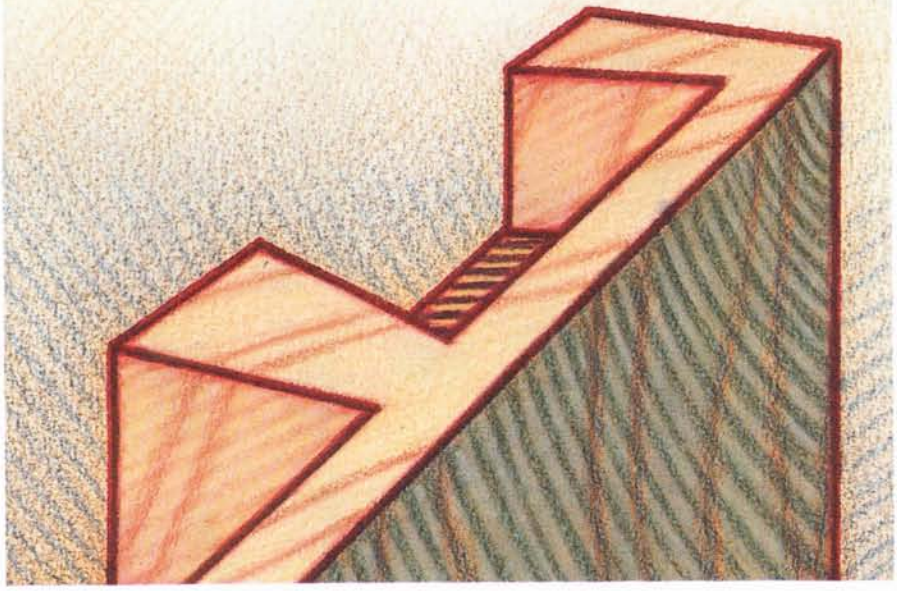

The question could reasonably be asked: Why use dovetails as a case joinery method if they will not be visible? In the Chippendale Small Chest (page 42), we used full-blind dovetails to join the top and sides. Other methods of joinery, such as a rabbet or spline, are easier than full-blind dovetails, but none is as strong. Also, given the unusual arrangement of a non-overhang top with an applied bead, there are few options for joinery to accommodate the bead detail.

We call these dovetails full-blind because they are totally concealed. Half-blind dovetails are those used to join a drawer front to the sides, where the dovetails are not visible from the front, but show from the sides. Full-blind dovetails are similar to half-blind dovetails, with the exception that both the pins and the tails are stopped partway through the thickness of the board. This means that considerable chisel work is required to cut them. While it's a good idea to have cut at least a few dovetails before you try the full-blind variety, it's by no means a prerequisite. If your dovetails aren't perfect, you can just shim the gaps with slips of veneer before the joint is assembled.

The chest sides and top are made from ¾ in. thick stock. Note, as shown in the exploded view, that the tails are cut in the top and the pins are cut in the sides. The tails and pins measure ½ in. deep and ½ in. long.

Start by marking for and then cutting the pins. But, before putting the pencil to the wood, it's a good idea to first set the marking gauge to the thickness of the sides, and scribe a line on the inside surface of the top (see Fig. 1), delineating the depth of the cut that you'll make later between the tails for the pins. With the marking gauge set to scribe a line ½ in. from the edge, mark the depth lines on the end grain of the sides, and on the inside face (Fig. 1).

Next, find the center points of the pins. You can use our dovetail layout (see Top View Detail on page 44), or the technique shown in the shop tip on page 66 to mark the center points. Now make up a hardboard (Masonite) template of a pin. Although you could

(continued on next page)

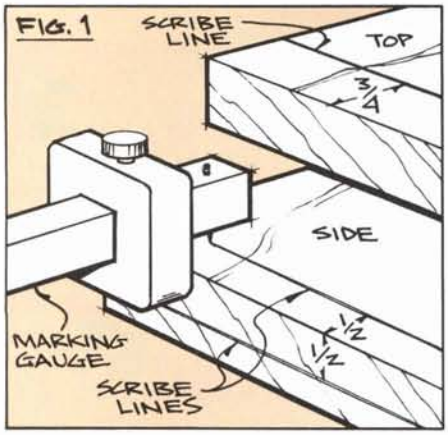

use a sliding bevel to mark the angled sides of the pins, a template makes the job a little quicker and the pin layout a little more consistent. Line up the center line on the pin template with the center lines that you've marked on the sides for the pins, and using a pencil or scratch-awl, mark the profile of the

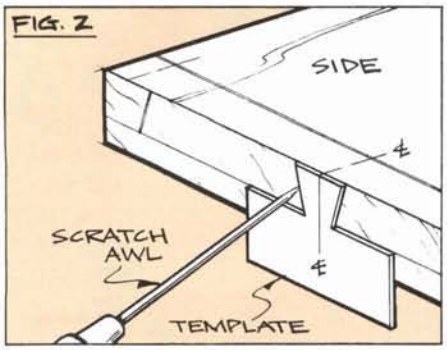

pins (Fig. 2). Using a square, continue the lines from the pins down the inside face of the sides to meet with the depth

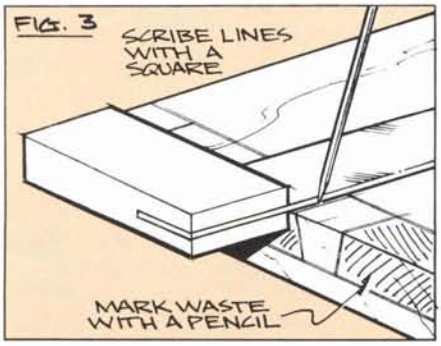

line you scribed earlier with the marking gauge (Fig. 3). Use a pencil to cross-hatch the waste area between the pins. This helps eliminate any confusion when you start to cut.

Now use a dovetail saw to make a cut across the corner, establishing the pins (Fig. 4). As shown, the saw must be angled slightly to follow the bevel of the pin. The cut will stop at the depth lines you scribed earlier. Try to keep the saw on line with the pencil lines both on the end grain and on the inside face. If you haven't cut dovetails before, it's a good idea to practice on some scrap first to get the technique down pat.

The saw cut establishes exactly one-half the sides of the pins. It doesn't reach the inside half. Some woodworkers continue the saw cut past the scribe line on the inside face, until the cut achieves close to full depth. Others

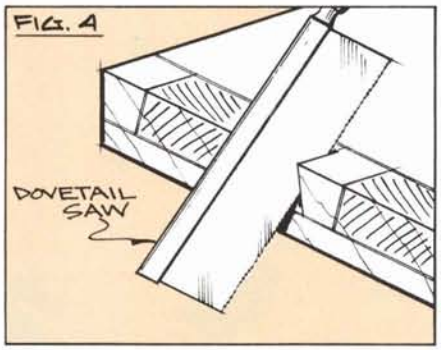

recommend using an old scraper blade, inserted into the saw kerf, to finish the cut into the corner. The scraper is the better method, since it doesn't leave an unsightly assortment of saw cuts that would be visible on the inside of the case once it is assembled. Insert the scraper into the saw kerf, and hit it with the hammer as needed to finish the cut. A sharp tap on the opposite edge of the scraper is needed to knock it back out. If you don't have an old scraper blade, you could substitute an old saw blade or steel rule. Your only other option is to use the chisel and cut out the corner as you remove the rest of the waste.

The next step in cutting the pins is to establish a starting point for your chisel work. Removing the waste between the pins is a two-step process of repeatedly severing the wood fibers across the grain, and then cleaning out the chip by using the chisel with the grain. The starting point for the chisel is made by scoring with a utility knife (Fig. 5A). Clamp a framing square in place as a straightedge, and make a $\frac{1}{16}$ in. deep score line as shown between the pins. Then, with the knife held at

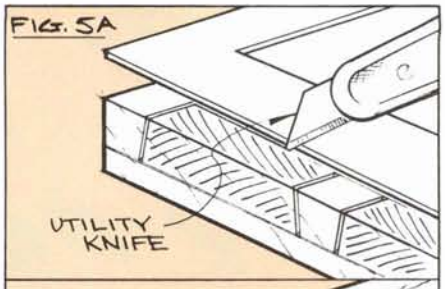

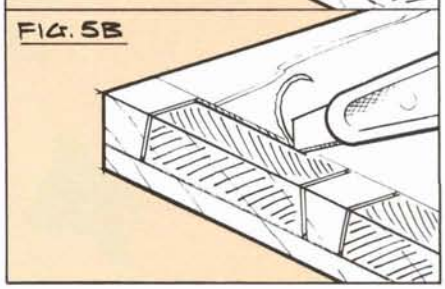

an angle, remove the chip (Fig. 5B). This step gives the back of the chisel a flat to bear against for the chisel work that follows. Without this small flat, you'll be starting the chisel on the flat plane of the board, a situation that typically results in chisel creep when the tool is first hit with the mallet. The bevel of the chisel tends to force the tool toward the flat back, compressing the wood fibers on that side. Also, on widely spaced dovetails, without a starting groove for the chisel, you end up with a somewhat ragged edge, since it's hard to line each cut up perfectly with the previous one.

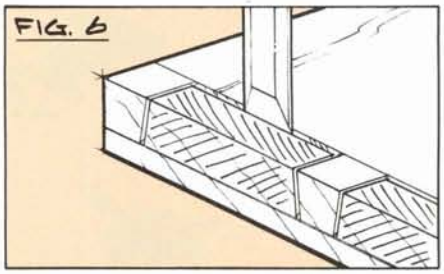

With your starting point established, now use the chisel and a mallet to sever the fibers down through the grain, as shown in Fig. 6. Don't attempt to cut deep. It's better to make a series of small cuts, rather than trying to clean out the waste in one large chip. After each cut down (remember to keep the flat of the chisel against the back), use the chisel in from the end of the board, with the bevel facing up, to pop out the waste (Fig. 7). You'll need several repetitions of Figs. 6 and 7 to clean out

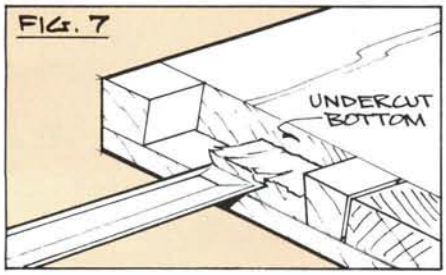

between each of the pins. Use the chisel to pare the sides of the pins, and the bottom and back of the cutouts between them, to clean up any raggedness. Remember that it's best to slightly undercut the bottom of the waste area between the pins, since this will help insure that the tails seat fully.

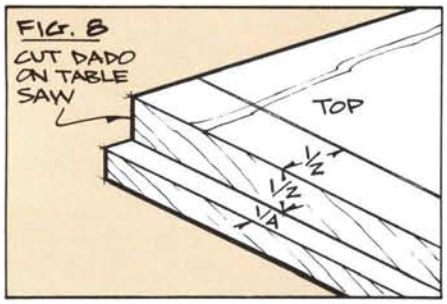

You now have the pins cut on the ends of the sides. Next, you'll cut the tails on the chest top. As noted earlier, you should have a scribe line on the top establishing the depth of cut. The first step in cutting the tails is to use the table saw with the dado head to establish a ¼ in. wide by ½ in. deep rabbet on the ends of the top (Fig. 8). With the rabbet cut, you can mark out the tails,

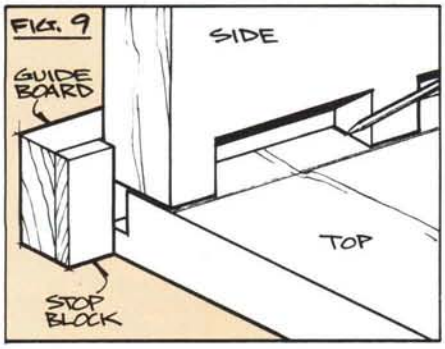

using the pins as a template. Hold the side in position as shown in Fig. 9, and scribe the lines with a sharp awl. Note that we used a guide board and stopblock to align the edges of both pieces, and the end of the top with the outside face of the side. Then carry the lines across the end grain. Remember, with the tails you'll be removing the areas into which the pins will fit. As before, cross-hatch the waste to avoid any confusion.

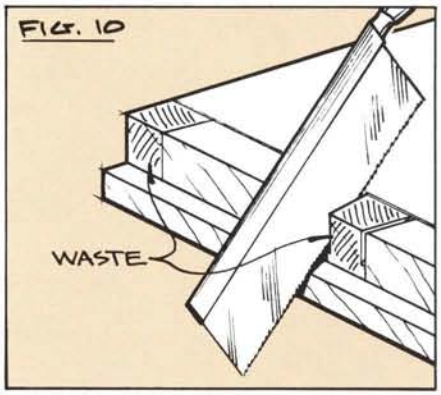

The tails are cut using the same basic technique that you used for the pins (Fig. 10). But be sure to keep the saw kerf on the waste side of the line. If the dovetails are a little tight, it's always easier to pare them back a tad, rather than filling the gaps with slips of veneer. Start with the saw, cutting across the corner, then use the scraper blade to finish the inside corner of the cut. When using the saw, note that you'll be able to achieve even less of the cut than with the pins, because of the lip remaining from the rabbet. Be careful not to cut deeply into this lip. However, if you miss a little and touch it there won't be a problem, because about 1/16 in. of the lip is cut away when the bead detail is applied after the sides and top are assembled. Use the straightedge and a utility knife to establish the start line for the chisel as before, and the chisel to sever the fibers and clean out the waste, as with Figs. 6 and 7.

Now dry assemble the sides and top. The dovetails should be a little tight at first. Inspect the joint as you start to fit the pieces together, and mark with a pencil the areas that need paring. After paring them back a bit, try the assembly again. Repeat as needed until the fit is just snug. If the dovetails show any significant gaps, fill them by gluing slips of veneer to the insides of the pins or tails. A few gaps won't affect the strength of the joint as long as most of the pins and tails fit snugly.

FREE CATALOG!
CALL TODAY
1-800-237-5907

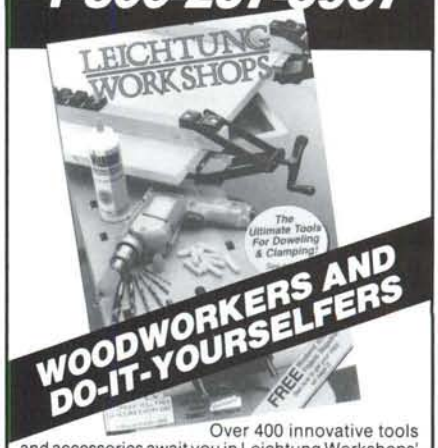

Over 400 innovative tools and accessories await you in Leichtung Workshops' 78-page, full-color catalog. Many items our own exclusive design ... perfect for woodworkers, do-it-yourselfers and home hobbyists. Everything we sell is guaranteed. Call toll-free (800) 237-5907 (Dept. 126) or mail coupon for your FREE catalog.

Leichtung Workshops, Dept 126
4944 Commerce Pky., Cleveland, OH 44128

YES, rush my 78-page, full-color catalog today!

Name _____
Address _____
City _____
State _____ Zip _____

A Finish Sander . . . A Thickness Sander

You can use this high-tolerance machine for light dimensioning as well as the finest finish work. Because stock is power-fed at a uniform rate, you'll achieve results impossible to duplicate with hand methods or hand-held sanders. Dimensions remain exact . . . no more low spots, wave or cross grain marks!

Improves Results!

Use the Woodmaster to dimension and finish-sand cabinet pieces, resawn stock, paneling, grandfather clocks, toys, tabletops, knees, burls, crotches, and much, much more! You'll soon find it's one of the most valuable tools in your shop!

30-Day FREE Trial!

Send for Complete Facts! See how you can use the Woodmaster Drum Sander in your own shop for 30 days completely without risk! Easy terms.

Phone **TOLL FREE: 1-800-538-4200,** Ext. DR34

WOODMASTER TOOLS, INC.
DEPT. DR34, 2908 OAK, KANSAS CITY, MO 64108

☐ **YES!** Please rush my FREE Information Kit and details on your 30-Day Free Trial Guarantee.

Name _____
Address _____
City _____ State _____ Zip _____

MARQUETRY: *The Pad Method*

by Nicholas Mariana

Marquetry is the art of constructing pictures or geometric designs with wood veneers. As a decorative art form, it was well advanced by the 30th century B.C., and it is the ancient Egyptians' work that now stands as the earliest evidence of the practice of marquetry.

Marquetry differs from inlay in that the marquetry picture or pattern is constructed of veneers and is then applied over the ground. The ground is the thick material that supports the marquetry. Until the end of the 19th century the ground was usually a solid board, but the development of plywood resulted in a much more structurally stable base. Today almost all marquetry is applied over a plywood or composite board ground.

With inlay, a recess is cut into the ground to accept a contrasting wood or

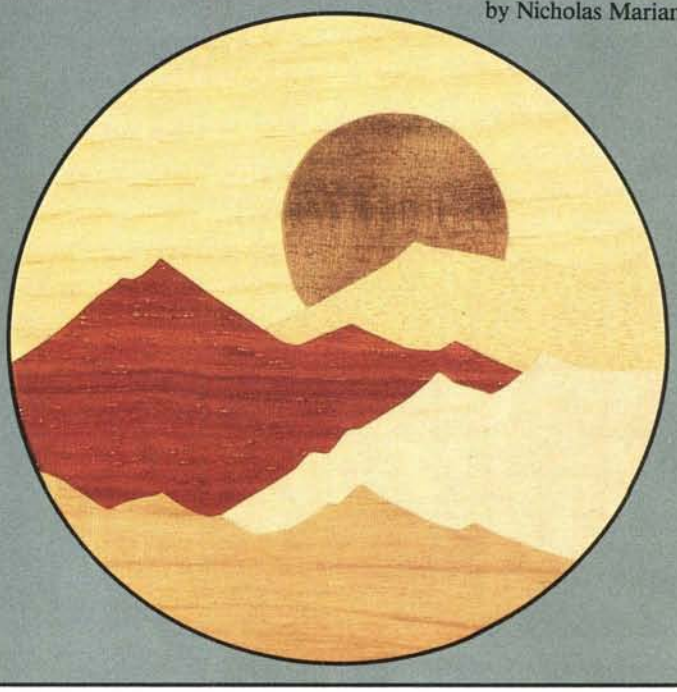

other material such as shell, ivory or even metal. Marquetry that uses geometric forms and patterns is referred to as parquetry. There are many subclassifications of both marquetry and parquetry, and different experts hold conflicting opinions of where the divisions lie between marquetry, parquetry, and inlay. But for our purposes we'll stick to the strict definition of marquetry as a construction of veneers applied over a ground.

The primary use of marquetry in woodworking is as a decorative overlay on boxes, desks, chests, trays and game boards. However, marquetry can also be hung on a wall for display as pictorial, abstract or geometric art. The work of professional marquetarians can command prices into the thousands of dollars, depending on the artist's reputation and the size and complexity of the piece.

There are five basic steps to marquetry: patternmaking, veneer selection, cutting and construction technique, gluing, and finishing. The two most subjective aspects, though, are patternmaking and veneer selection.

Pattern

There are endless sources for marquetry patterns and designs. Traditional designs and pre-cut kits can be purchased, or you can create your own design from scratch. You can also copy or trace a picture. A pantograph is especially useful for reducing or enlarging a pattern directly from a drawing or photo. The complexity of the pattern will usually determine the type of cutting/construction technique that you use. Beginners should avoid complex patterns where there are a lot of inside cuts that require drilling a starter hole first for the saw blade.

Veneer Selection

Much of the art in marquetry is in the selection of veneers. Serious marquetarians will maintain a large supply of veneers, some with specific effects in mind. As the painter needs paints for his palette, the marquetarian's palette requires a variety of woods. The greater their number and variety, then the greater the number of effects that can be achieved. Freak veneers that exhibit unusual mineral stains, burls, striping or coloring are especially prized, since in pictorial marquetry they may be vital to producing a special effect. For example, a fiddleback figure can be used to depict drapery folds, and freak blue mineral-stained obeche wood can be used for skies or water. Bright blues and greens are especially hard to depict since there are no ordinary woods with these colors.

Also important in the selection of veneer is the use of grain. With the right piece of veneer, the natural concentric rings of grain can be used with dramatic effect for a sky or for the appearance of waves on water. Quilted mahogany, bird's-eye maple, figured pommelle, satinwood, padauk, ebony and Brazilian rosewood are among the favorites of marquetarians.

But the selection of woods is also based on the cutting/construction technique to be used, and not merely special effects. In the pad method of marquetry, for example, the most important consideration is that the woods selected both complement and contrast with each other.

Cutting/Construction Techniques

There are three basic methods of cutting and constructing a marquetry picture or design: the window method, the direct method and the pad method. We'll look at these three methods briefly, and then follow the instructions for the pad method used to make the Marquetry Coasters on page 56. Professional marquetarians often utilize a variety of cutting techniques on a single piece, however, and it should be kept in mind that there is no "right" or "wrong" way. When it comes to marquetry, the best way is the one that works for you.

(continued on next page)

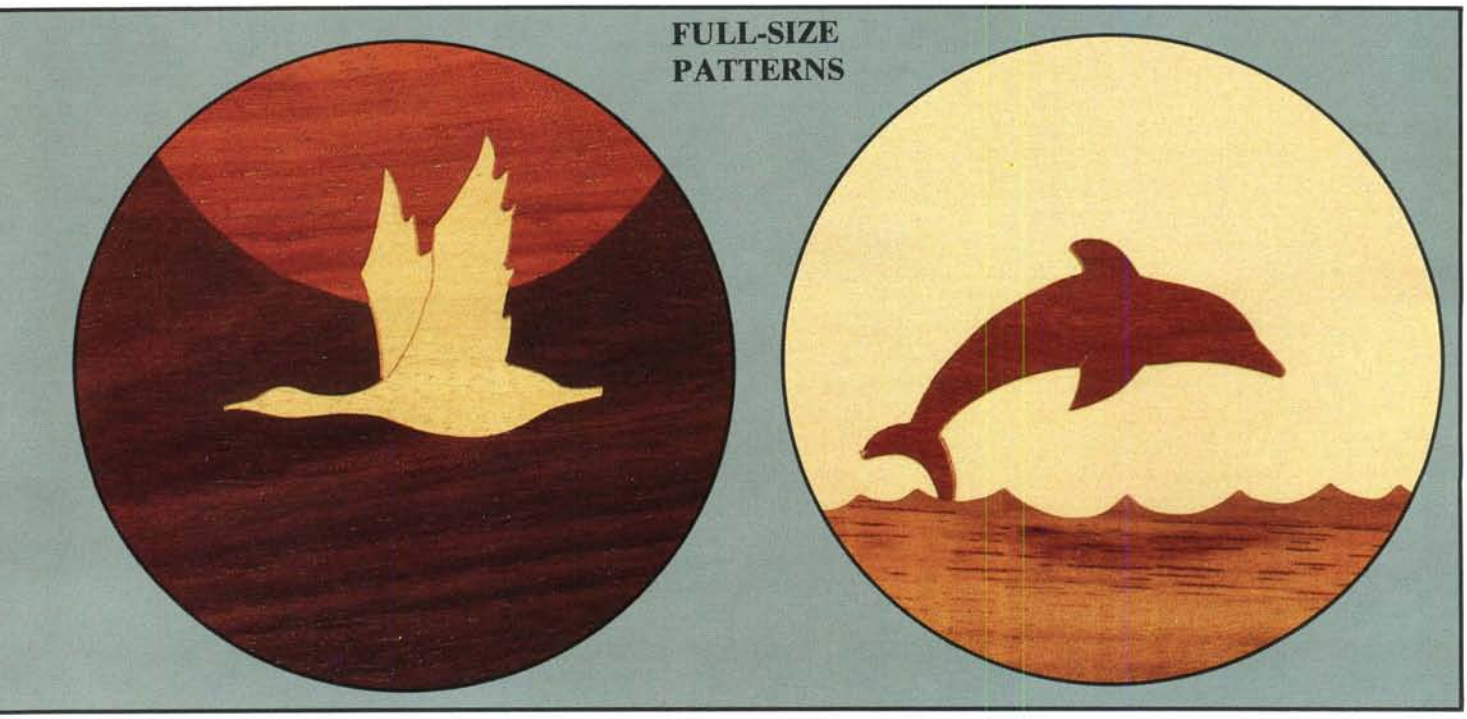

The Window Method: With the window method a pattern is taped along its top edge to an oversize waster veneer sheet. The waster is a sturdy scrap of veneer that serves as a template. The first line or shape to be cut is then transferred from the pattern to the waster with carbon paper, and the shape is cut out with a sharp knife. This creates the "window." Veneer is now slipped under the window and adjusted for grain direction or pattern. The window then serves as the guide to trace the pattern onto the veneer, so it can be cut and placed. In this manner the waster is gradually cut away as the picture is constructed. A new window is created for each additional part or section of the pattern. You generally work from the larger shapes to the smaller, and from front to back within the picture. It is a relatively slow process and yields single editions. The advantages, though, are total freedom of veneer selection and the ability to simply try another piece of veneer in the window if a mistake is made.

The Direct Method: The direct method involves cutting each shape in a pattern individually. A master pattern is copied to make an individual pattern for each piece. Multiple pieces of the same veneer, with the grain aligned, are then stacked in a pad, which is taped together with the pattern on top. This method allows tight control of grain direction and veneer selection, and yields multiple editions of complicated patterns with identical color composition. It is also the most demanding type of production marquetry since the pattern lines, which are equal to the thickness of the saw blade, must be followed exactly. If they are not, then the pieces will not fit together as intended.

The Pad Method: With the pad method, a series of contrasting veneers are stacked in a pad, and then taped together with a pattern on top. After the pad has been cut, the different colored pieces of veneer are shuffled to create several editions of the same pattern. Veneer for the pad must be selected carefully or some of the pictures may not combine well when the colors are rotated. Also, you'll need to stay with a simple pattern, since there's no control over the grain direction in individual sections. As you'll note from the pad method instructions, all the grain is aligned horizontally. Once the pattern is cut out, the tape is removed and the pieces are shuffled. The advantages of the pad method are that it yields multiple pictures — each different in color and veneer — and that the individual pieces of veneer fit together perfectly. Both the direct method and the pad method require cutting with either a power scroll saw or a hand-held fretsaw. A fine jeweler's or marquetry saw blade is needed to get a smooth, accurate cut.

The Pad Method: Step-by-Step

The pad method detailed here pertains specifically to the mountain scene featured on the coasters. However, the same basic technique is also used to cut the two alternate patterns, the dolphin and the Canada goose, or any other marquetry picture or geometric design that is suited for this method.

To create the marquetry for the coasters you'll need the following materials and tools.

Materials:
1. Six 4 in. × 4 in. sheets of various species of veneer
2. One sturdy 4 in. × 4 in. waster sheet of veneer
3. Six 4 in. × 4 in. sheets of contact paper or plastic sheet
4. Masking tape

Tools:
1. No. 2/0 fret sawblade or equivalent
2. Power scroll saw or hand-held fretsaw
3. Veneer saw

Step 1: The six species of veneer that you select should include three light-colored woods and three dark-colored woods. Cut the veneer into 4 in. squares using the veneer saw. Beginning with the sturdiest light wood, stack the veneers up, alternating light and dark. End with the sturdiest dark wood. Place the waster sheet on the bottom of the pile, and tape the pad securely on each side. The waster, just a sturdy piece of scrap veneer, supports the pad and prevents the grain from tearing out on the bottom veneer. Tape the pattern on top. You can trace the pattern you like using one of the three full-size patterns we provide.

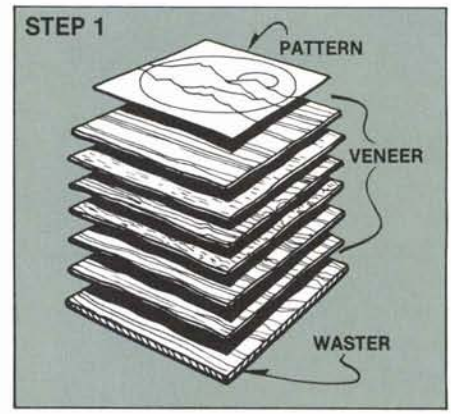

Step 2: If you use a scroll saw for this step, set the blade tension just short of the breaking point. Begin the entrance cuts slowly. While cutting, remember that each blade has its own slight drift, and will tend to wander a bit in transition between ripping and crosscutting. Make exit cuts slowly to avoid popping out delicate edges. Apply masking tape snugly over the edges at all entrance and exit cuts to prevent breaking or chipping-out. Add more tape as you cut the various sections away, to keep the pad in register.

The mountain pattern is cut from the bottom up, removing one section at a time. The final cut removes the sun from the sky.

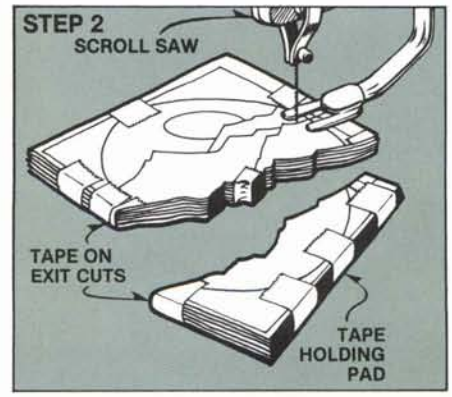

Step 2 Alternate: A fretsaw can be used instead of the scroll saw. Deep-throat fretsaws designed specifically for marquetry are best, but the standard woodworking coping saw has a deep enough throat for the marquetry on the coasters. Note that you'll need to

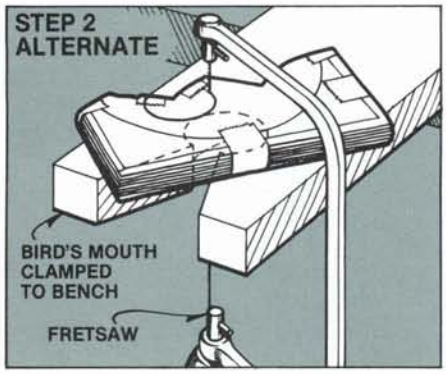

use a bird's-mouth clamped to the workbench as a support surface. The bird's-mouth is a board that has a V-shaped cutout narrowing down to a hole. After making the entrance cut, the actual marquetry cutting is done by keeping the saw blade within the hole, and rotating the pad as needed to follow the pattern lines. The purpose of the bird's-mouth is to provide maximum support for the veneer as it is being cut, in order to prevent tear-out. Move the workpiece as needed to make best use of the bird's-mouth, and be sure to keep the saw blade perfectly vertical as you work. Note that the blade is cutting on the pull stroke.

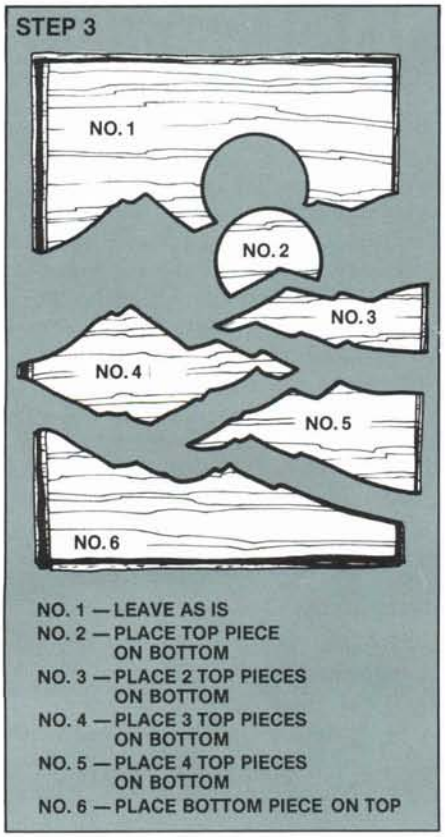

Step 3: You should now have all the sections cut as shown in Step 3. Each section is its own little stack of veneer. Next, you'll rearrange the order of the veneer in the stacks so when you take the top piece off each stack, you'll build a contrasting picture. First, carefully remove the masking tape. Leave the veneer in the first stack — the sky — in the order it is already in. For the sun, place the top piece on the bottom; for the farthest mountain, place the top two pieces on the bottom, and so on. For the foreground, move the bottom piece of veneer to the top. Now, with the veneer in each stack in a different order, you are ready to start assembling the pictures.

Step 4: Lay out six pieces of contact paper or plastic sheet, left to right, sticky side up. The plastic sheet I use is a frosted plastic that's sold in hardware stores as a stick-on privacy panel for windows. It has a paper backing that's easily peeled away, and the fact that it's semi-transparent lets you view the veneer from both sides. The veneer pieces are assembled into pictures in the reverse order from which they were cut. Start by laying out the six sky pieces. Work left to right, laying the first piece from the top of the sky stack on the leftmost piece of contact paper, the second sky piece on the next piece of contact paper, and so on, until the six sky pieces are in place on the six pieces of contact paper. Make sure each piece is laid facedown on the contact paper, or the pattern will be transposed. Next add a sun to each picture, again working left to right, and starting from the top of the sun stack. Repeat this procedure until all six marquetry pictures are complete. When assembled correctly, each picture will have six wood varieties. If you selected either the dolphin or goose pattern, then you'll be working with only three pieces of veneer for each picture.

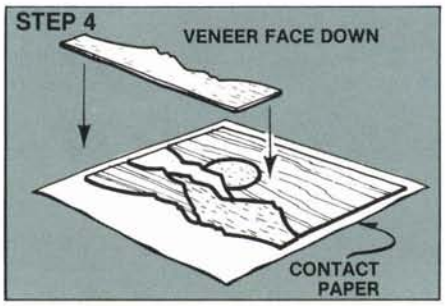

After assembly, check and patch any area which may have chipped during cutting and handling. If you're careful and don't lose the chips, they can simply be fitted back into place. If they are lost, you'll need to cut a patch from the same species of veneer and try to match the grain.

You now have your marquetry pictures ready to apply to the coasters. Of the five basic steps to marquetry, we've just covered the first three: pattern, veneer selection and cutting technique. Gluing the veneer to the ground and finishing are detailed in the Coaster project.

Editor's Note: Next issue we'll use the window method of marquetry to create a sunset design on an attractive breakfast tray project.

Sources

There are many marquetry techniques, including sand-shading, bevel cutting and fragmentation, that go beyond the scope of this article. One of the books that details these and other marquetry techniques is *The Marquetry Manual* by William A. Lincoln, published by Stobart & Son, London, England. Another excellent source book is the Marquetry Society of America's *Modern Marquetry Handbook,* which is available from Constantine's, 2050 Eastchester Road, Bronx, NY 10461.

Constantine's is also a good source for veneers and other marquetry-related products. They stock a wide variety of both natural and dyed wood veneers, marquetry tools, kits and books.

If you are interested in learning more about marquetry, you may want to join the Marquetry Society of America (MSA), P.O. Box 224, Lindenhurst, NY 11757. MSA publishes a newsletter and has an extensive pattern library. Annual dues are $15. Write for more information.

MARBLEIZING

Creating a Faux-Marble Finish on Wood

Marbleizing and other faux finishes are enjoying a resurgence in popularity. The technique has been around since antiquity, and was employed by the Romans for interior arches and ceilings where it wasn't practical to use real marble. More recently it's been used to decorate furniture. Old Sturbridge Village, Massachusetts, a recreation of an 1830 New England town, has an extensive collection of marbleized pieces.

Marbleizing is a collection of techniques rather than a single process. There are so many ways to achieve a marble-like surface that they could easily fill a book. But many of the techniques depend on the fact that paints can be induced to flow together in much the same manner as the molten rock that formed marble.

Marbleizing is fun. It should be a series of happy accidents. The more you think about this, the worse it's going to come out. The more "mistakes" you make, the better off you will be. Above all, you don't want the piece to look repetitive. You're trying to achieve a kind of chaos here, so throw out any ideas of precisely reproducing a specific piece of marble. But since you are trying to get the feel of marble, it does help to have a piece of marble to study while you're working. You'll find it's relatively easy to make wood look like marble or even a type of marble; making it look like a specific slab is another thing altogether.

Our marbleizing technique uses a wet-on-wet approach in which colors are applied to a wet glaze coat and allowed to flow together. The glaze coat used is ordinary oil-based paint thinned with turpentine and linseed oil. The paint used for the swirling patterns and veins are artist's oils. The process takes several days because the primer, base coats, glaze coats and veins are applied in subsequent sessions. Each coat must dry thoroughly before proceeding to the next coat.

It's not important that your colors be mixed to any specific shade or even that your procedure exactly follow our technique. What's important is the general method. The procedure given below will guide you through your first marbleized piece and introduce you to several marbleizing techniques. If you want to experiment more, there are a whole host of methods to try. They range from brushing techniques to the immersion of whole pieces in a tank filled with water and swirling oil paints. For more information, an excellent book on marbleizing and other faux finishes is *The Art of the Painted Finish for Furniture & Decoration* by Isabel O'Neil. The book is available from the Wood Finishing Supply Co., Inc., 100 Throop St., Palmyra, NY 14522; (315) 597-3743.

The Tools

Good implements to have on hand are sponges, cotton balls, a 2 in. brush, and a fine ¼ in. round artist's brush. The sponges work best if they're natural sponges. But the important thing is that they have an irregular surface. You can achieve the same result with a synthetic sponge by tearing hunks off of it. Also good to have is a turkey feather. The feathers are often used for the veining. They leave a fine irregular line very similar to the fissure-like veins found in marble. Finding a turkey feather can be difficult, however. If you don't live in the country you may have trouble locating one. We used the fine artist's brush for veining, and found that it works well.

You'll also need oil-based interior paints, both a flat primer and a semi-gloss in a color you'll use as a background shade in the marble. For the secondary colors that form the swirls and veins, buy small tubes of artist's oil paints. Also get linseed oil, turpentine, some rags, and some small plastic containers.

Getting Started

The process begins with the priming of the wood with the oil-base paint. We were trying to make white Italian marble for the Ice Chest on page 58, so we

used a white primer. When the primer is dry and sanded with 220-grit paper, add two or three coats of a base color. We used a white semi-gloss paint. Sand each coat lightly.

Next, you prepare a glaze, which is actually made up from your base color — in this case the semi-gloss white oil paint — mixed with turpentine and linseed oil. The glaze creates a wet surface into which you apply other wet paints to get cloud-like effects. The proportions we used for the glaze were one part turpentine, one part white semi-gloss and two parts linseed oil. Make about one-half pint of the mixture for a small area like the top on our Ice Chest. Store the glaze in a plastic container with a lid because you'll use it again later in the procedure.

Also prepare the next color you'll use; you apply the glaze and the first overlay color in the same session. We used a thin wash of gray for the initial cloud-like sections: just a dab of artist's black oil paint in about an ounce or two of turpentine. The next part happens very quickly so you want to have everything at your elbow when you start.

Floating on the Colors

First apply a generous coat of the white glaze, working with a full brush and covering the whole surface. Make the glaze thick enough so that the other colors can easily mix with the liquid on the surface.

You then dip the sponge into the thin gray mixture and dab, or float, it onto the wet glaze coat. The idea is to make some irregular islands of color in the surface, so you just dab here and there trying not to make anything look too regular and trying not to cover the whole surface. The paint spreads out in irregular patterns as you dab it on, so it doesn't take a lot of effort to get the "clouds." What you're doing is putting very wet paint on a very wet surface — you want the paint to move around and flow.

The whole process should go fairly quickly. That's not to say you have to hurry up. You want to work quickly because this should be a spontaneous process that's fun and that doesn't take too much effort. The paints will stay wet for quite a while, so you can play around with the piece if you want. At this stage the top won't look like real marble, but don't worry about it. It gets better.

Also, remember that at this stage you can always just wipe the whole thing off with a rag if you decide you don't like the overall effect. Make the surface features as random as possible. For example, if you see you have what looks like a puddle in one area, leave it there. It's probably good; real marble also has similar irregular features.

Here's where the cotton balls come in handy. If an area looks too heavy with color, a cotton ball just touching the surface will suck up the paint. You'll be surprised how easy it is to manipulate the colors with the wet-on-wet approach used here. You can even get the colors to move around by applying just a drop of turpentine to the surface. That gives an interesting effect because the turpentine will force the color to move into another color in an irregular manner. Another technique is to lift the board and move the colors around by tilting it.

When you're finished playing around with the first coat, let it dry thoroughly. It may take two or three days because the oil paint is so thick.

The secondary colors are applied next. You again apply a glaze, which serves as a wet base, but this time the glaze is even more transparent. It should be thin enough for the previous colors to show through. Take one part of the original glaze (which you saved in a plastic container) and mix it with one part of turpentine and one part of linseed oil. For the secondary colors we used a pale green and a pale blue artist's oil. Use an even smaller amount of secondary color with the turpentine than you did with the primary color. We applied both secondary colors in the same session. Use separate sponges for each color or use the same sponge and let the colors intermingle. The green and blue go on in similar areas as the gray. You use the same dabbing process, applying the secondary colors in patches that are sometimes separate from the primary patches, but also in patches that overlap the primary and are adjacent to the first set of colors. The overlapping of colors helps give the illusion of depth in the surface.

Remember that marble is three dimensional with colors on the surface partially obscuring other colors underneath. You want to achieve a similar effect, but you don't want to lose all of your base-color areas. Let the secondary colors infiltrate but not cover the base-colors. If too much blue obscures the underlying gray, just remove a bit of the blue with a cotton ball.

Veining

The final step is to apply a few veins. Don't go overboard here, the veins are only an accent and are better left understated than overstated. To make the veining color we use a very diffuse gray, just a bit of black and white paint mixed in with a lot of turpentine. A popular tool for veining is a turkey feather, but we used the very point of a ¼ in. round artist's brush. It doesn't matter much which you use as long as you apply the veining paint in a very fine irregular line.

The veining can be done in two ways — on a wet surface or on a dry surface. We used both methods. We applied some veins while the surface was still wet from the secondary colors. Then we applied a few more light veins after the surface dried.

The technique we used to apply the veins, or fissures, was to hold a brush loosely in an outstretched hand. The paint is applied with a free movement of the whole arm with the fingers gently rolling the tip of the brush. Work freely, keeping just the point of the brush in contact with the surface.

Keep in mind that the veins in marble often cross each other, but not in any regular manner. And some fissures should move through the open areas left in the base color. If they have any general direction, it should more or less contrast with a general direction in the rest of the marble patches already applied. Here it's especially valuable to have an actual chunk of marble at hand for inspiration.

After the veining, all that's left is the application of a clear finish to protect your work. First sand the marbleized finish with 320-grit wet-and-dry paper. Then apply three or four coats of lacquer, sanding with the wet-and-dry paper between coats. You should also apply the lacquer to the bottom of the marbleized surface to keep it from warping from unequal moisture absorption on the two sides.

Shop-Test: Four Portable Planers

Portable thickness planers fill a need that doesn't have much to do with the portability. They're affordable.

Not many hobbyists can shell out nearly $1,000 for a stationary thickness planer, but many can come up with the $300 to $500 that these machines cost. Because they cost less than traditional stationary machines, they allow the hobbyist to start surface planing rough lumber. There are two main advantages to planing your own wood: saving money on lumber and getting better lumber. The planer allows you to surface your stock after it's done warping and twisting. And you'll do a better job than any mill, because it's you who's going to use the wood.

Up until several years ago there really wasn't an inexpensive portable thickness planer. But Ryobi changed that with the introduction of the AP-10 planer, which sells for about $350. And more recently several competitors have jumped into the field. We tested four machines: the Ryobi, the Makita 2012, the Penn State CT-318 and the Jet JWP-12. The Penn State and Jet are both made in Taiwan, and they turned out to be identical machines with different nameplates, although the importers say there are differences in quality specifications.

Our shop test included some tough stuff. We planed pine, cherry, oak and bird's-eye maple. The samples included boards with reversing grain and wild grain that would be very difficult for any planer to handle. And while we did find differences in the way the planers handled the boards, these differences weren't great enough to be the primary factor in deciding which planer to buy.

The point we'd like to emphasize is that, much to our surprise, all the portable planers worked very well. They all left an excellent surface with defects that could easily be sanded out or that were attributable to an extremely difficult grain. And they all planed lumber to a tolerance of about .003 in. across the width of the board, which we judged better than acceptable. The Jet and Penn State did leave slight score lines along the length of the boards, which we were able to minimize by filing down some tabs protruding from the castings.

Our feeling is that people interested in a planer for occasional use would do well with any of these machines. Of course, the one question we can't answer is how long the machines will last. We have our opinions, but it's impossible to judge durability objectively in a shop test. We'd have to run the machines for months under identical conditions.

But these machines aren't really designed for continuous hard use anyway. They're meant to be pulled out on weekends for small runs. You'd have to be crazy to buy one as a primary thickness planer for a cabinet shop. If you're a pro, break down and spend the money for a bigger machine.

The table on page 33 compares the four machines and how they did in our shop test. The differences are based on pretty fussy criteria. For example, all the planers did a better job on the bird's-eye maple than our 8 in. jointer did. But the Makita left a smoother surface with less noticeable "hairs" around the eyes than the other planers. All were able to plane the bird's-eye without popping the eyes. The machines produced some snipe when the boards were fed in helter skelter, but careful feeding of the stock eliminated much of the problem.

Design

The portable planers essentially do the job with the same configuration of components. There are some small variations, however, that can make a difference. The Makita, for example, has a table that moves up and down in relation to the cutting head. The other three machines move the motor and cutting head up and down in relation to

a fixed table. The fixed table is preferable if you're using auxiliary infeed and outfeed rollers to support the stock. With the moveable table you'd have to re-adjust the rollers for every pass. We're not sure this is a crucial feature for the small planer, though, because most hobbyists will probably be working with small runs of relatively short stock.

The most obvious difference in the features is the width of the cut. The Ryobi has a maximum 10 in. cut, while the others all take a 12 in. wide cut (actually 12⅛ in. for the Penn State and Jet).

Another small difference in the machines is the table configuration. The Makita, Penn State and Jet use a steel table that folds out from the small work table to support the stock. The Ryobi uses fold-out rollers instead. The Ryobi rollers can be a hazard, however, on the outfeed side if your fingers get caught between them and the stock exiting the machine. The stock is being pushed along by power-feed rollers, so the fingers don't stand much of a chance of winning the battle. Because of the potential hazard, Ryobi has started shipping the machines with plates that span the gap between the outfeed roller and work table. Ryobi also offers the plate as a free upgrade kit for planers sold before they made the change. (Call 1-800-525-2579 to order a kit.)

Another variation is the rollers in the work table of both the Penn State and the Jet. The rollers are adjustable for various kinds of stock. Move them up a little for rough softwoods and down a little for hardwoods already jointed smooth on one side. They offer a little more control of the cutting than the solid tables on the other machines do.

One small feature we like on the Makita is the built-in depth gauge and depth chart on the front of the machine. You should always take lighter cuts from wide stock than from narrow stock. But only the Makita really gives you the ability to gauge how much you're removing. With the other machines you have to gauge the depth of cut by judging how far you've turned the crank. On the Makita the wood pushes up a small gauge that indicates the precise depth of cut.

The Makita and Ryobi also offer systems to ease your headaches when the cutters get dull. The Ryobi has a sharpening jig and an adjusting gauge that make the process relatively painless. The Makita has disposable blades, each of which has two edges. The Penn State and Jet both supply adjusting gauges for resetting sharpened knives.

As far as we could tell, all the machines had comparable motors. The Penn State and Jet have the most powerful motors as measured by the amperage they consume. All of the machines take about the same maximum cut. However, these are all light-duty machines. As a general rule, it's better to take many light cuts instead of a few deep cuts.

Test Comparisons

	Ryobi AP-10	Makita 2012	Penn State CT-318	Jet JWP-12
Surface Appearance	G/E	E	G/E	G/E
Chipping & Chattering	G/E	E	G	G
Snipe	G	G/E	G	G
Noise	G	G/E	F	G
Portability	E	G	G	G
Dust Collection	E	E	E	E*
Ease of Operation	G	G/E	G	G
Service	G/E	E	G	G
Adjustment	E	E	F	F
Owner's Manual	G	G	F	P
Overall Quality	G/E	E	G	G

E = Excellent; G = Good; F = Fair; P = Poor
*The dust collector is supplied with the Jet. It's an option on the other machines.

Ease of Use

All of the machines were acceptable as far as ease of use. The cranks to raise and lower the cutter or table worked well. All of them were light enough to move around with relative ease. The Makita is a little lighter than the others, but it doesn't have a handle, so you have to lift it from the bottom.

Setup and Adjustment

Each machine needed adjustment of one kind or another. Although it's true that you can use the planers without adjusting them to a "T," you really should spend the time. It's certainly very important to check such things as the tightness of the bolts or screws holding in the cutters and to go over the machine to make sure everything is there and in working order. And while the machines will probably work as sent from the factory, we found that they were off quite a bit from the factory specifications. Adjustments cut down on snipe and insure an even cut.

All of the machines come with a tool kit, which is especially helpful for people who don't have metric wrenches. The machine that took the least setup time was the Makita; the machines that took the most time were the Penn State and the Jet.

Ryobi: Adjustments on the Ryobi went fairly easily. Especially helpful was the blade setting gauge, which makes sure that the blade is placed accurately in the holder on the cutting cylinder. The infeed and outfeed rollers are well designed and allow for easy adjustment. This was refreshing since those very fine adjustments are generally very hard to get just right. The only real problem with the Ryobi adjustments came in trying to remove the knives. The instructions say to lift them out after locking the cutting cylinder in place. But you really need a magnet for the job because your fingers can't get a good hold and you're dealing with sharp edges.

One nice feature about setting up the Ryobi is the base blocks that are supplied as part of the packing crate. The wood blocks were already pre-drilled to accept the carriage bolts, which were also supplied. With the blocks, you can set up the machine from start to finish with just what's supplied with the machine.

Makita: The Makita was even easier than the Ryobi to set up and adjust. If you want a machine where all you have

(continued on next page)

SQUARE DRIVE SCREWS

- Square Recess Reduces "Cam-Out"
- Heat Treated for Strength
- Deep Thread for Exceptional Holding Power
- Sharp Point is Self Starting-even in most Hardwoods

Special: 600 screws-(100 each of 6 sizes), 1 power driver bit and1 hand driver.

Size	Length	Price
#6x	1/2, 5/8, 3/4, 1, 1-1/4, 1-1/2	13.35
#8x	3/4, 1, 1-1/4, 1-1/2, 2, 2-1/2	16.65
#10x	1-1/4, 1-3/4, 2, 2-1/4, 2-1/2, 3	23.65

UPS Ground Service Only

Order Total	S & H
$.01 to $20.00	$3.00
$20.01 to $50.00	$4.50
$50.01 to $80.00	$6.00
Over $80.00	$7.50

Va. Residents add 4.5% Tax
Visa & MC accepted

McFEELY HARDWOODS 712 12th St.• PO Box 3 Lynchburg • Va. 24505

Toll Free 1-800-443-7937
FAX (804)-847-7136 WWJ989

CASES and BINDERS

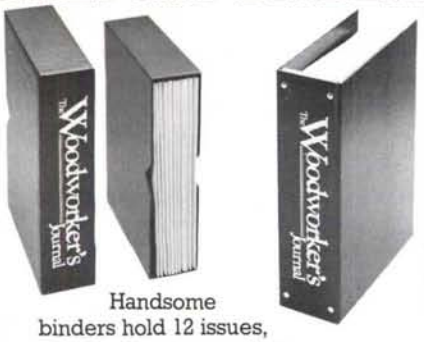

Handsome binders hold 12 issues, open flat for easy reading. Compact box cases also available.

Please send your order with payment to:
JESSE JONES INDUSTRIES, Dept. WWJ
499 Erie Ave., Philadelphia, PA 19134

Enclosed is $ _____.
Add $1 per unit Postage and Handling.
Outside U.S.A. $2.50 (U.S. currency only).
PA residents add 6% sales tax.

Size: ☐ Standard (Vol. 10/2 - present) ☐ Oversize (Vol. 4/5 - Vol. 10/1)

Please send _____ Binders; _____ Cases for *The Woodworker's Journal.*
Binders: 1 - $9.95 3 - $27.95 6 - $52.95
Cases: 1 - $7.95 3 - $21.95 6 - $39.95

Name (Please Print)_____
Street _____
City _____
State/Zip_____

Charge Orders (Minimum $15): Am Ex, Visa, MC, DC accepted. Send card name, #, Exp. date.

CALL TOLL FREE 7 days, 24 hours **1-800-972-5858**

Features Chart

	Ryobi AP-10	Makita 2012	Penn State CT-318	Jet JWP-12
Cutting Width	10	12	12 1/8	12 1/8
Cutting Depth less than 6 in.	3/32	3/32	1/8	1/8
Cutting Depth over 6 in.	3/32	3/64	1/16	1/16
No Load Speed	8000	8000	8000	8000
Motor Ampere Rating	13	12	16	16
No. of Cutting Knives	2	2	2	2
Feed Rate	26 ft./min.	26 ft./min.	26 ft./min.	26 ft./min.
Weight	57 lb.	53 lb.	63 lb.	63 lb.
Price*	$350	$500	$350	$370
Warranty	1 year	1 year	1 year	1 year

*Prices as advertised. List prices are higher.

to do is uncrate it and plug it in, this is it. Only the outfeed and infeed tables needed adjusting — a quick job with the setscrew system Makita uses. The disposable knife system also eliminates adjustments. The machine's two narrow disposable blades each have two cutting edges. When one set of edges gets dull, you just turn the blades around. When both edges are dull, you replace the set.

Another plus for the Makita was the operator's manual. It stood out from the pack in being clearly written and easy to understand. The Makita was also alone in having a cover to keep the drive chain clean.

Penn State and Jet: As already mentioned the machines were identical as far as we could tell, so we'll discuss their setup and adjustments together. Both give you the same tool kit, knife adjusting gauge and miscellaneous parts.

The machines were somewhat more difficult to set up and adjust than the Ryobi or Makita, but the task was still well within the capability of most people with rudimentary mechanical ability. The rollers used on the bed of the machines were a little harder to adjust than the extending rollers on the Ryobi or the tables on the Makita. An eccentric cam controls the roller height. The adjustment takes two hands and all your attention, so you can't pay much attention to the gap you're trying to achieve as you tighten the screw. Also, the instructions call for a roller height of .003 in. to .004 in. above the table. That's hard to measure. We used a piece of notebook paper placed on top of the table as a gauge. The paper we used measured .004 in. thick. Put the straightedge on the paper and adjust the rollers so that they just meet the straightedge.

The Penn State and Jet also use extension tables like the Makita, instead of the extension rollers used by the Ryobi. These tables were also a little harder to adjust than the Makita because they used a locking nut instead of a setscrew. We found that it helped to move the machine to the very edge of a workbench so you could get a wrench under the table. Also, you need another wrench — an adjustable will do — besides the ones supplied, to get the job done.

Adjusting the knives was also a little harder than it was on the other two planers. You adjust the knives while they are on the cutting cylinder, instead of removing them and setting them on the bench. The gauge, included with the tool kit, is designed to contact the cylinder. You turn a setscrew until the knives contact the gauge. The system works well; it just takes a little practice to get the feel of it.

Conclusion

Despite the differences in features, we were pleasantly surprised by how well all the machines worked. Any of them would be a good addition to a home workshop. The ability to plane lumber to thickness is a great help in many woodworking operations. These machines bring that capacity to the woodworker of modest means.

Oak Globe Stand

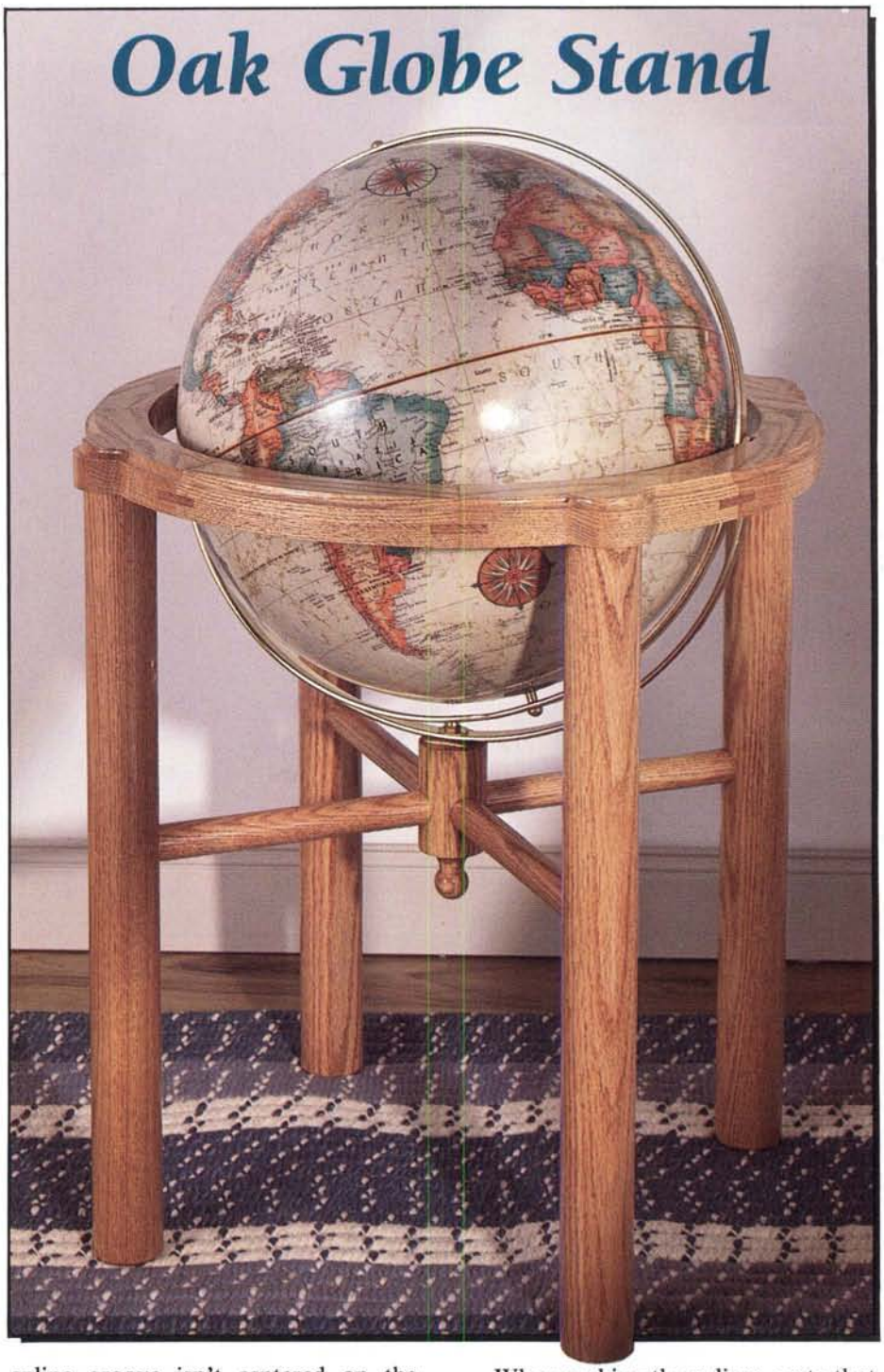

Our Oak Globe Stand has clean, simple lines. The essential function of a stand is to allow you to tilt the globe to any angle. This stand does that without distracting you from the essentials of the world. A source for the globe is listed in the Bill of Materials.

Begin with the wood ring that surrounds and supports the globe. The ring is made of eight segments (B) which are joined at the ends by splines (Fig. 1). The segments are all cut at a 22½-degree angle. It's crucial that the angle be exact. If ever there's a place to make test cuts, it's here.

First, cut eight pieces of scrap the same width and an inch or so longer than the length given for the oak segments (the thickness doesn't matter). Set your miter gauge to 22½ degrees and establish a stop to cut one end of all the segments. Cut all eight pieces with that setup. Then move the stop in to establish the final 10 in. length of the segments, and make the cuts on the other end of each scrap piece.

If by some miracle the pieces fit together in a circle, follow the same procedure to cut the oak segments. But the pieces won't fit. You'll need to fuss with that miter-gauge setting two or three times — and do the test all over again — before it comes out just right. Don't worry if your test pieces shrink and end up much smaller than the oak segments. What you're trying to achieve here is the angle. The real reason you need to start out with pieces the same size as the oak segments is to make sure you have the right clamps and stops on hand when it is time to cut the segments. If you test the setup with little tiny pieces of scrap, you won't be ready to cut the real pieces when you finally get the angle right. Making the cuts immediately after getting the setup right is crucial.

By the way, if you can imagine yourself ever cutting a circle again, it would be worth your while to make a 22½-degree miter jig as described in our September/October 1988 issue. That way you make all those test cuts just once, and have the 22½-degree setup forever frozen in a reusable jig.

After cutting the segments, establish the spline grooves with a dado head in the table saw (Fig. 2). Set the dado ¼ in. wide and ¾ in. high. Note that the spline groove isn't centered on the stock thickness. It's closer to the bottom of the ring than the top (see Side View). Make sure that you mark the face that will be up and cut all the spline grooves with the same face of the workpiece against the table saw fence. Use a tenon jig such as that shown in Fig. 2. The segments are narrow and short, so they are dangerous to cut without some sort of tenon jig to hold them securely.

When making the splines, note that the grain runs in the same direction as the ring segments.

With the segments cut and splines ready, you can clamp and glue the assembly. If you haven't test-fit the segments, do it now. This is a good place for a glue that gives you time for adjustment, such as hide glue. Use a web clamp (sometimes called a band clamp) for the glue-up.

(continued on next page)

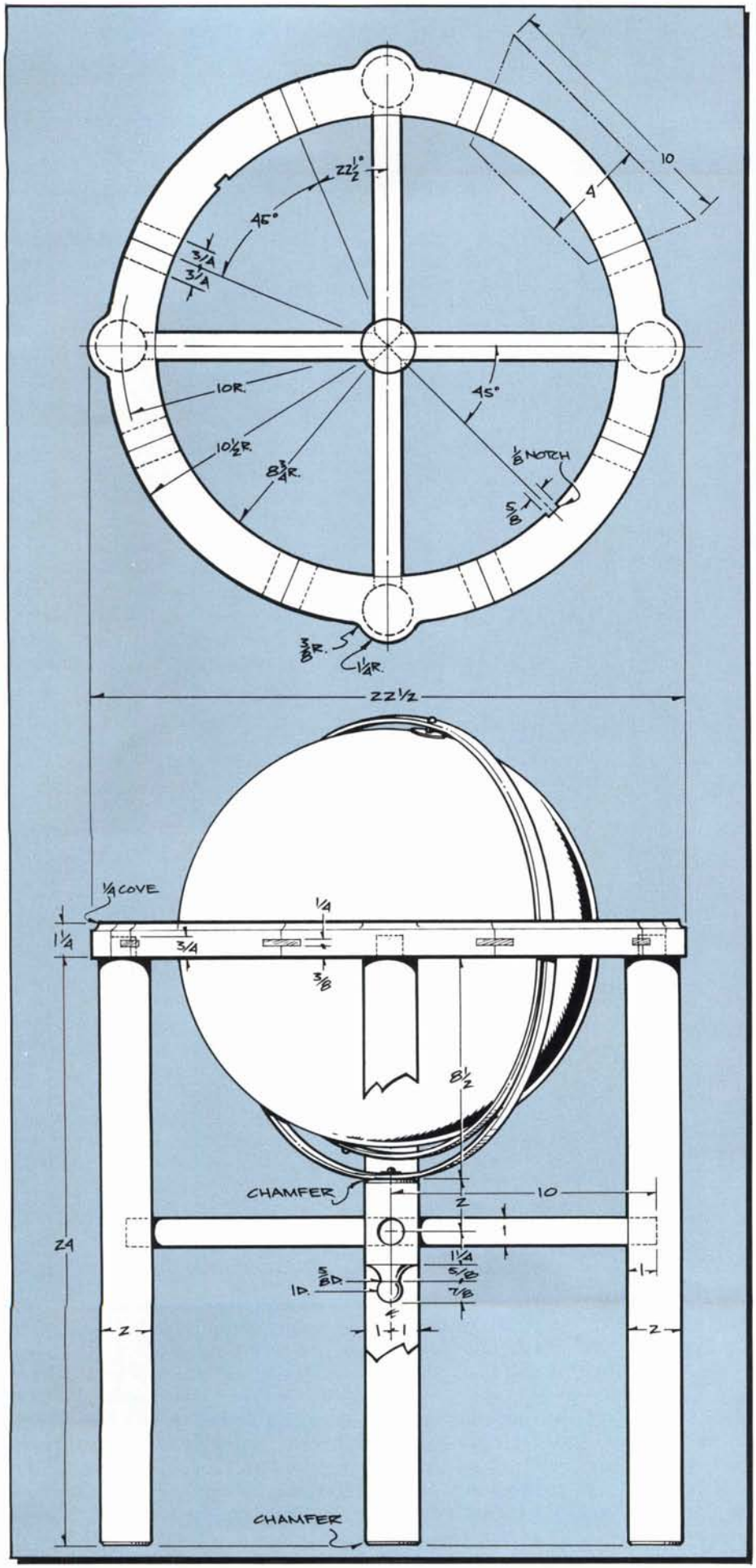

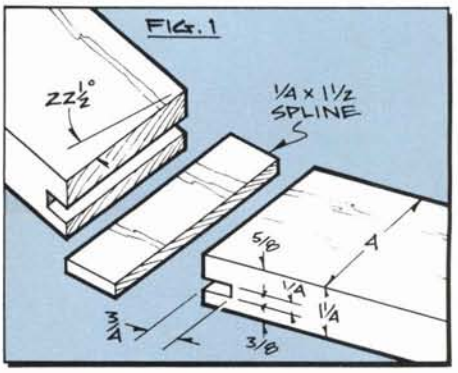

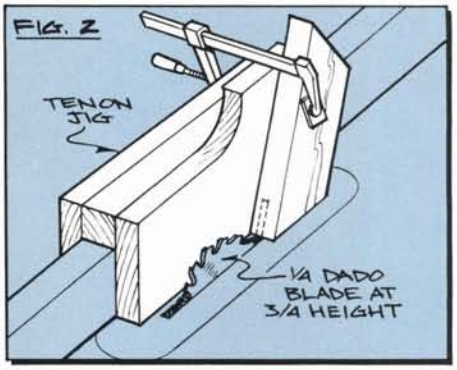

While the ring is in the clamp, move over to the lathe and turn the legs (A), stretchers (C) and the hub (D). Oak tends to tear a bit on the lathe, so if you're a novice woodturner, you may want to stop well short of the 2 in. diameter and do a lot of sanding to get a smooth surface. But if you get the angle of the skew chisel just right, you can clean up the legs to a glass smooth surface without sandpaper. Fig. 3 shows the correct angle of the skew chisel for a light shaving cut. It also helps to raise the tool rest almost to the top of the cylinder, as shown. Don't forget to turn the tenons on the ends of the legs.

Now go back to the ring and cut the outside and inside profiles. Use a band saw for the outside. For the inside you'll need to use a scroll saw or a hand-held jigsaw. Form the cove along the outside edge with a bearing-guided ¼ in. radius cove cutter in a hand-held router.

An alternate method of cutting the inside radius on the ring — a method that allows you to use the band saw — is to leave two of the ring joints dry when you first glue up the ring. That way you can take the ring apart, cut each half of the circle on the band saw, and then glue the ring back together again. For both methods it's a good idea to make a full-size cardboard template of the ring. That way you can mark the circle by laying the template over the octagon.

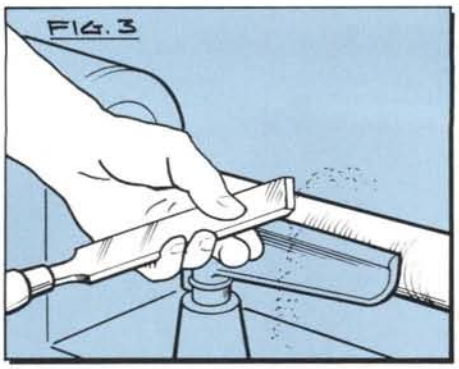

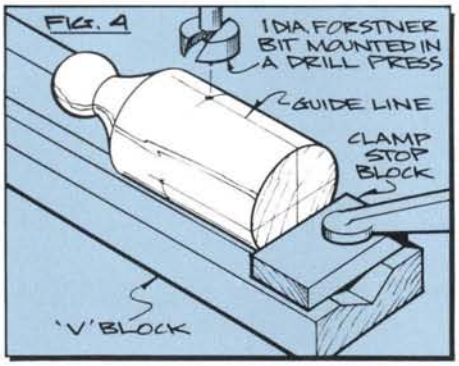

With the ring profiles established and smoothed, lay out and bore the mortise holes on the underside of the ring. Then, as shown in the top view, cut the ⅛ in. deep by ⅝ in. wide notches that the brass ring fits into. Also bore the four holes in the hub with a Forstner bit (Fig. 4). Lay them out carefully and use a V-block to hold the hub steady in the drill press. The holes meet in the middle of the hub, forming two through-holes. Also use a stop-block as shown so all the holes are at the same height.

Note that you'll need to disk sand a V on one end of each of the stretchers. Without the V, you can't fit all four into the hub.

Now assemble the globe stand, using yellow glue in the joints. For clamping, use a web clamp around the legs to hold the stretchers in and four bar clamps to hold each leg in place in the mortises. After the glue dries, remove the clamps and give everything a good sanding. Start with 120-grit paper and proceed to 180-grit and then 220-grit paper.

To finish the stand apply a coat of shellac as a sealer and two or three coats of lacquer or polyurethane varnish.

Finally, drill a hole in the hub for the hanger bolt and attach the brass ring (E) and the globe (F). The hanger bolt and brass nut are supplied with the globe (see Bill of Materials).

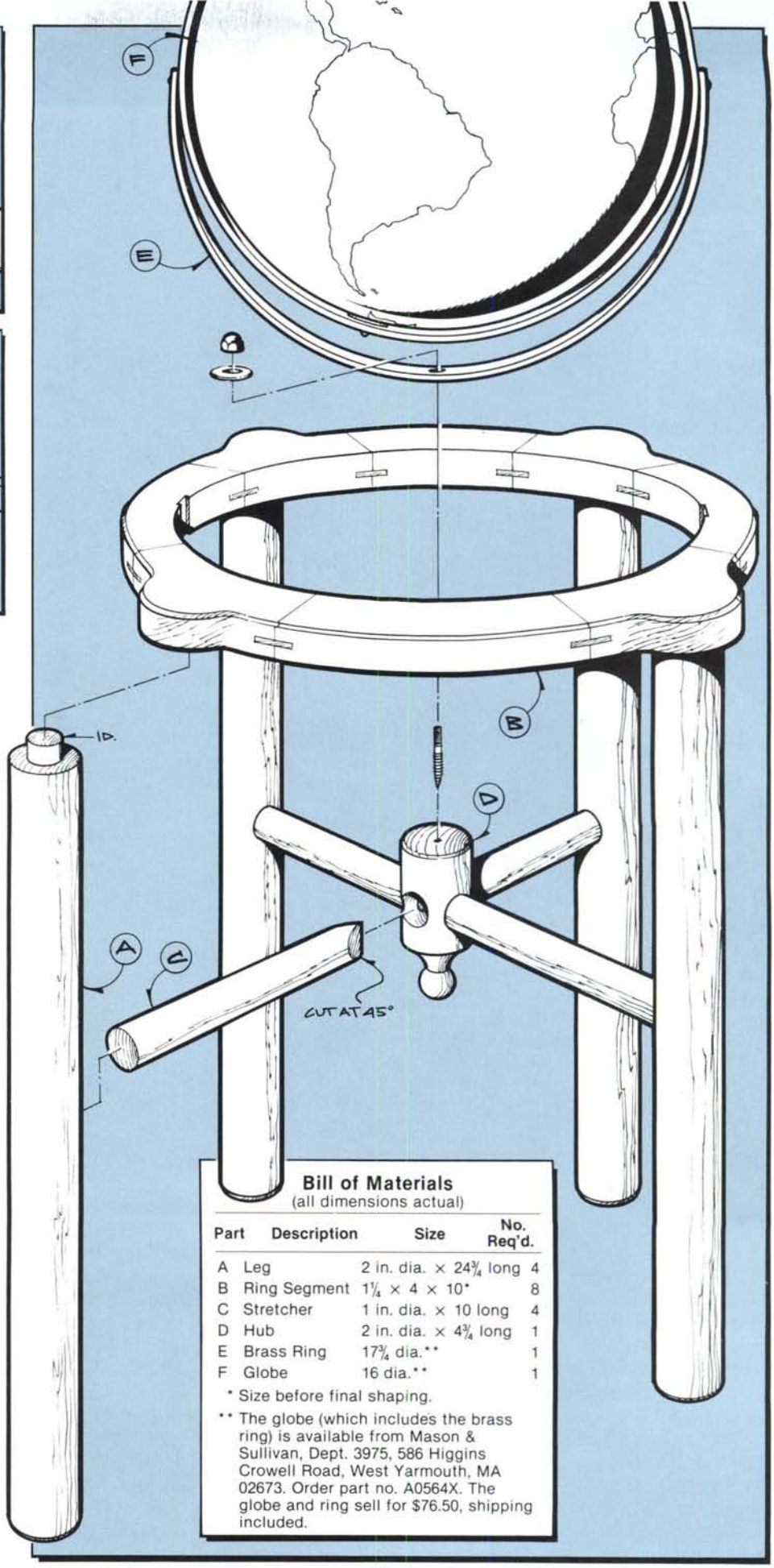

Bill of Materials
(all dimensions actual)

Part	Description	Size	No. Req'd.
A	Leg	2 in. dia. × 24¾ long	4
B	Ring Segment	1¼ × 4 × 10*	8
C	Stretcher	1 in. dia. × 10 long	4
D	Hub	2 in. dia. × 4¾ long	1
E	Brass Ring	17¾ dia.**	1
F	Globe	16 dia.**	1

* Size before final shaping.

** The globe (which includes the brass ring) is available from Mason & Sullivan, Dept. 3975, 586 Higgins Crowell Road, West Yarmouth, MA 02673. Order part no. A0564X. The globe and ring sell for $76.50, shipping included.

• COUNTRY •
Bake-Room Table

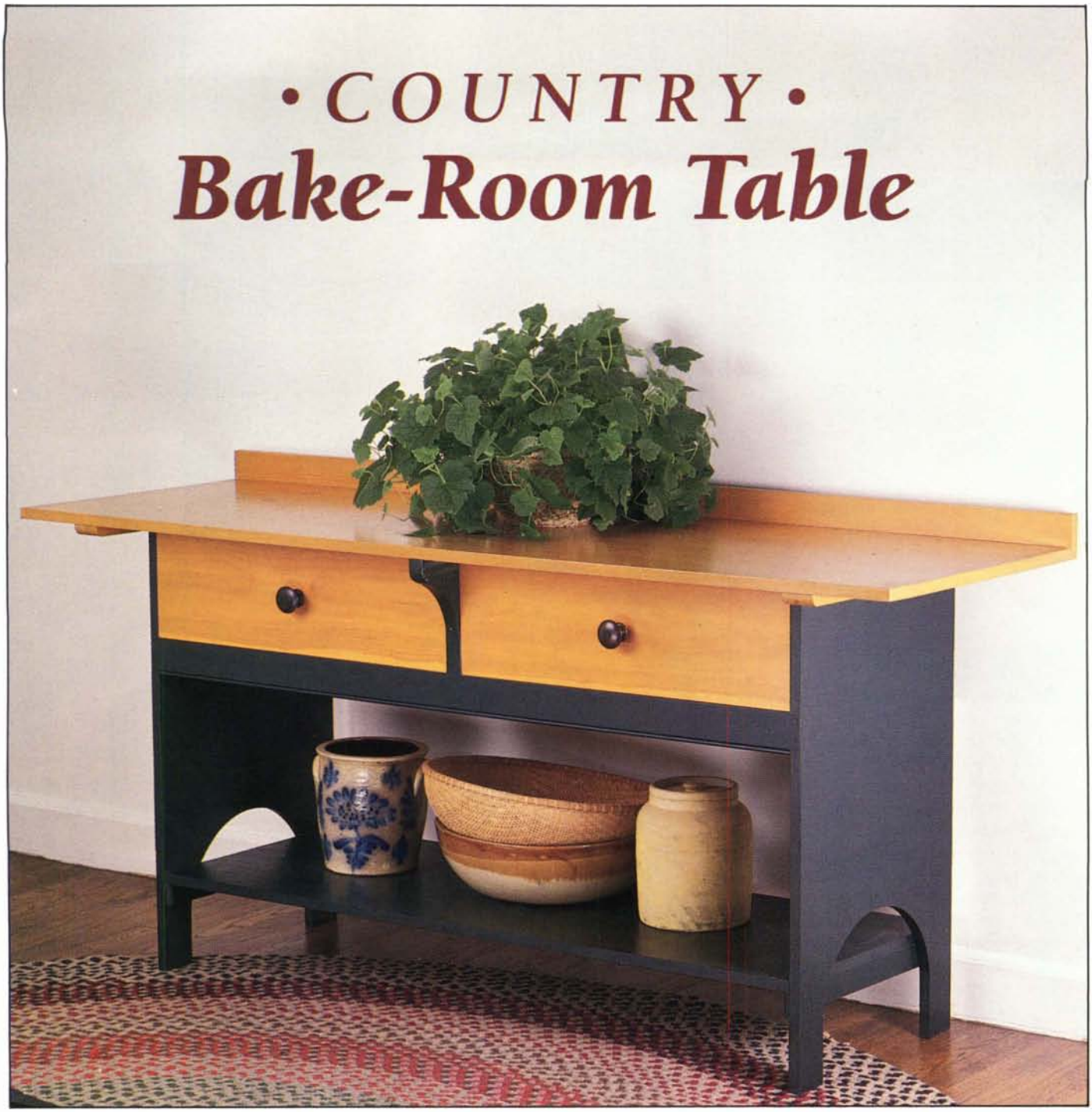

Not every kitchen has room for a table this large, but if yours does, this Bake-Room Table makes a great work surface. Massachusetts furniture designer *Gene Cosloy* keeps the table at one end of his kitchen. The two large drawers are perfect for storing utensils, and the large shelf is great for pots, pans, bowls or stoneware. Don't let the project name lead you to believe that this table is only for the kitchen, though. It's just as appropriate in the living or dining room, or for use as a display table in a hall.

Cosloy used pine for the top (A), top cleats (I), backsplash (B) and drawer fronts (K). The remaining parts, which will be painted, are poplar. Cosloy explains that using a hardwood for the remaining parts adds strength and also cuts down on wood movement, since poplar doesn't move or cup as severely as pine. One other benefit is the elimination of the problem of bleed-through. Knots in pine tend to telegraph through paint. Also, poplar accepts paint more evenly than pine.

This project requires considerable edge-gluing. The top, sides (C), divider (D), and shelf (G) will all need to be assembled from narrower boards. Take special note of the divider. It's $20\frac{1}{8}$ in. wide, but only 10 in. long. This layout keeps the grain direction of the top, sides and divider consistent. If you run the grain of the divider front to back, it could prevent expansion and contraction of the top, possibly resulting in a crack. Once the edge-glued parts are out of clamps, crosscut them to final length. Lay out and scribe the radius on the bottom end of the sides, and cut it out with a

handheld jigsaw. Then sand the curve smooth. Cut the curve on the front edge of the divider and the notch for the stretcher, using the full-size pattern as a guide.

Next, cut the remaining parts, including the backsplash, back (E), top cleats, shelf cleats (H), and drawer guides (J). Note that the back and sides are notched so they interlock. Drill slotted screw holes as indicated through the various cleats. The screw holes at the front of the cleats are not slotted. This serves to direct all movement toward the back, and

(continued on next page)

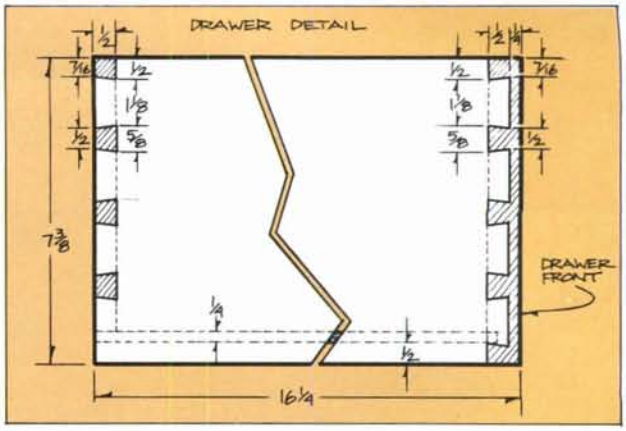

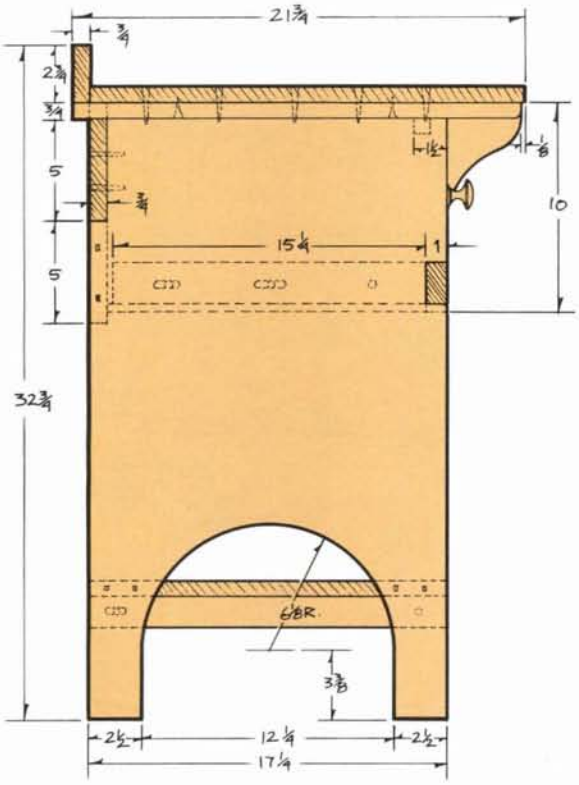

SIDE ELEVATION

Bill of Materials
(all dimensions actual)

Part	Description	Size	No. Req'd.
A	Top	¾ × 21 × 65¾	1
B	Backsplash	¾ × 2¾ × 65¾	1
C	Side	¾ × 17¼ × 30	2
D	Divider	1 × 20⅛ × 10	1
E	Back	¾ × 10¾ × 49¾	1
F	Stretcher	1 × 2½ × 49¾	1
G	Shelf	¾ × 17¼ × 48¼	1
H	Shelf Cleat	¾ × 1½ × 17¼	2
I	Top Cleat	¾ × 2 × 21⅝	2
J	Drawer Guide	1 × 2 × 15¼	4
K	Drawer Front	¾ × 7⅞ × 23⅝	2
L	Drawer Back	½ × 6⅝ × 23⅝	2
M	Drawer Side	½ × 7⅞ × 16	4
N	Drawer Bottom	¼ × 15¾ × 23⅛	2
O	Drawer Stop	¾ × ¾ × 2	2
P	Knob	1¾ dia.*	2

* Available from Woodcraft Supply, 41 Atlantic Ave., Box 4000, Woburn, MA 01888. Order part no. 50L61. Price is $4.75 for ten.

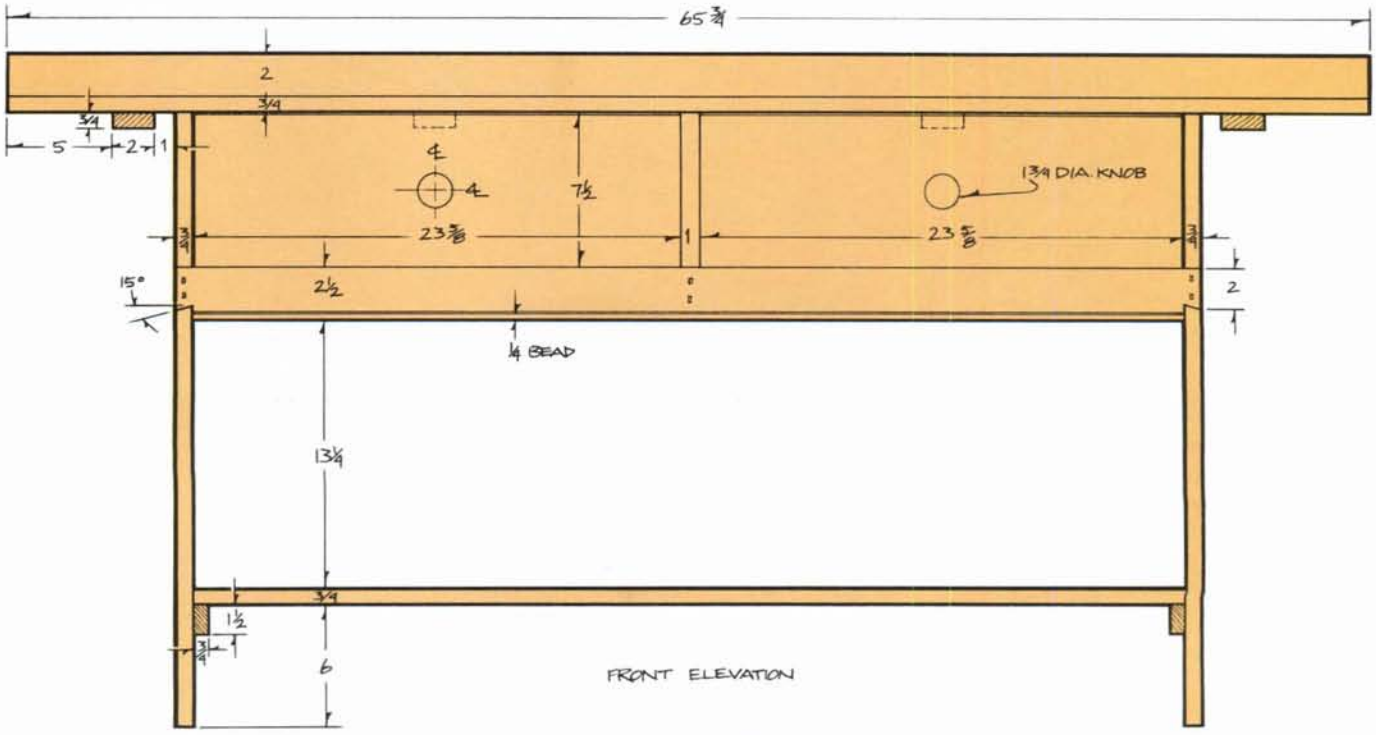

helps to keep parts at the front of the table flush. The front ends of the top cleats and shelf cleats are rounded, making for a gentle transition instead of a sharp square end. As you'll note from the Bill of Materials, the drawer guides and drawers are sized so they'll stop ¼ in. from the back. This way, if the table sides shrink a little, the drawer guides won't press against and break out the back.

The stretcher (F) has a bead cut on the front at the bottom edge. This bead is established before the dovetails are cut on the ends. The bead is best cut on the table saw with a molding-head cutter. We used the Sears three-bead molding-head cutter, catalog no. 9BT2352. After the dovetails have been cut on the stretcher ends, use them as templates for cutting the corresponding dovetail notches in the sides. Just make certain that both notches start exactly 7½ in. down from the top end of the sides.

Now begin assembling the table. First locate and screw the shelf cleats in place, then assemble the sides, divider, back and stretcher. Note that the shelf is screwed in place up through the shelf cleats (see Shelf Cleat Detail).

The old-fashioned cut nails through the sides into the shelf, through the back and sides, and through the stretcher into the sides and divider provide mechanical strength and contribute to the country look of the piece. We used six-penny cut nails, available from the Tremont Nail Company, P.O. Box 111, Wareham, MA 02571. Cut nails aren't likely to split the wood, since the square end crushes through the wood fibers rather than forcing them apart. However, you may want to drill pilot holes rather than take any chances. Screw the drawer guides in place.

The base assembly is finished with Cohasset Colonials' Wayside Green milk paint, which reads as nearly black. The milk paint can be ordered from Cohasset Colonials, Cohasset, MA 02025. The backsplash is glued to the top and then the top assembly is finished before it's fastened to the base. The top cleats are also finished separately before they

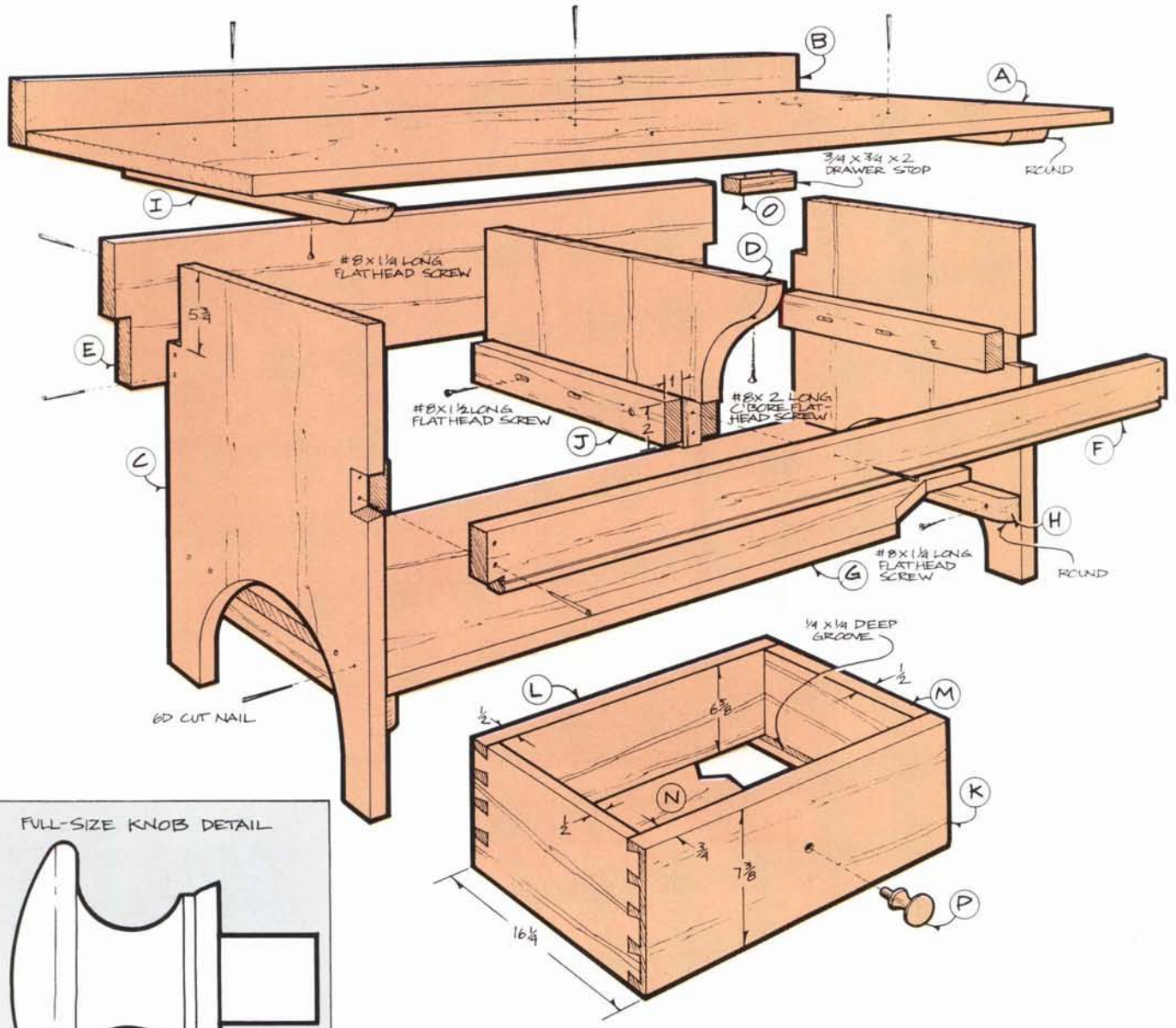

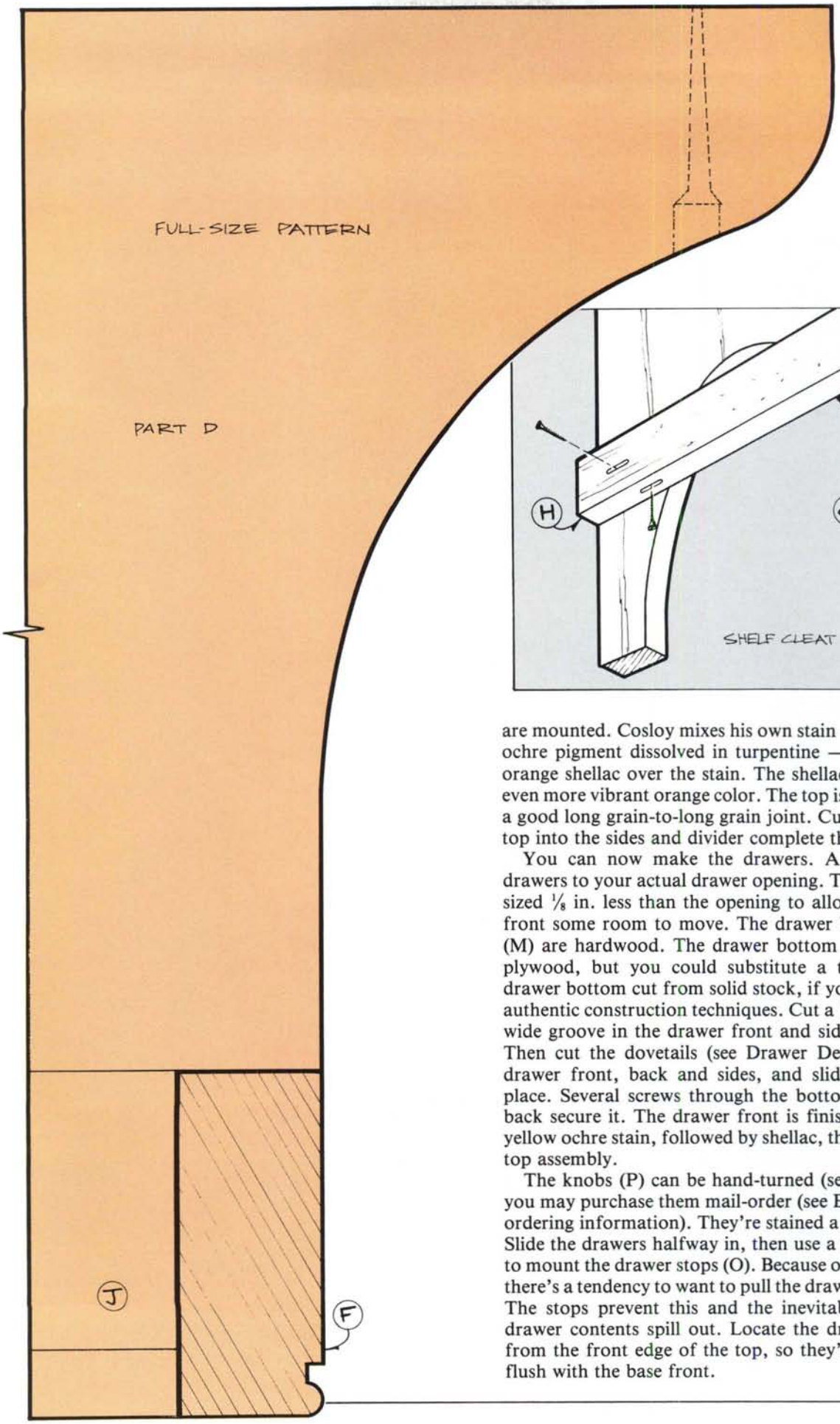

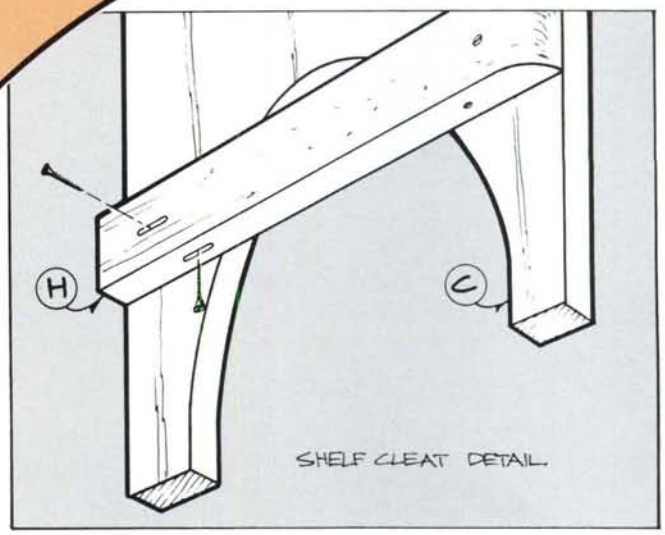

are mounted. Cosloy mixes his own stain — a French yellow ochre pigment dissolved in turpentine — and then applies orange shellac over the stain. The shellac gives the pine an even more vibrant orange color. The top is glued to the back, a good long grain-to-long grain joint. Cut nails through the top into the sides and divider complete the assembly.

You can now make the drawers. As always, size the drawers to your actual drawer opening. The drawer height is sized ⅛ in. less than the opening to allow the pine drawer front some room to move. The drawer back (L) and sides (M) are hardwood. The drawer bottom (N) is ¼ in. thick plywood, but you could substitute a traditional beveled drawer bottom cut from solid stock, if you are a stickler for authentic construction techniques. Cut a ¼ in. deep by ¼ in. wide groove in the drawer front and sides for the bottom. Then cut the dovetails (see Drawer Detail), assemble the drawer front, back and sides, and slide the bottom into place. Several screws through the bottom into the drawer back secure it. The drawer front is finished with the same yellow ochre stain, followed by shellac, that you used for the top assembly.

The knobs (P) can be hand-turned (see Knob Detail), or you may purchase them mail-order (see Bill of Materials for ordering information). They're stained a dark walnut color. Slide the drawers halfway in, then use a stubby screwdriver to mount the drawer stops (O). Because of the top overhang, there's a tendency to want to pull the drawers all the way out. The stops prevent this and the inevitable mess when the drawer contents spill out. Locate the drawer stops 4½ in. from the front edge of the top, so they'll stop the drawers flush with the base front.

Small Chest

Our small chest makes an elegant chairside or bedside table. The three drawers provide storage, and the bail handles on either side are handy if you need to move it. It's perfect for a small space, measuring only 14¾ in. deep by 19 in. wide by 24 in. high. We used cherry, an attractive wood that works easily.

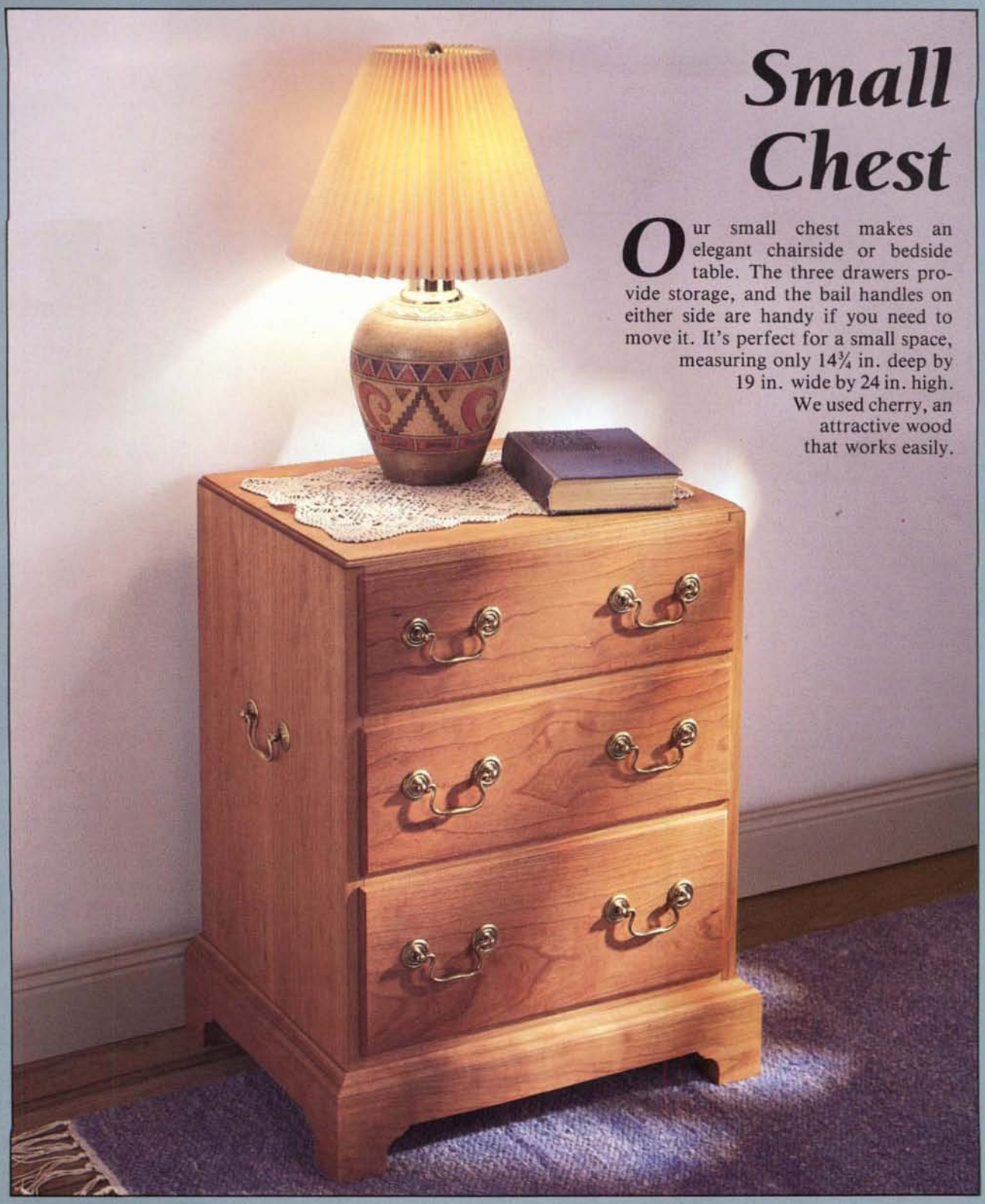

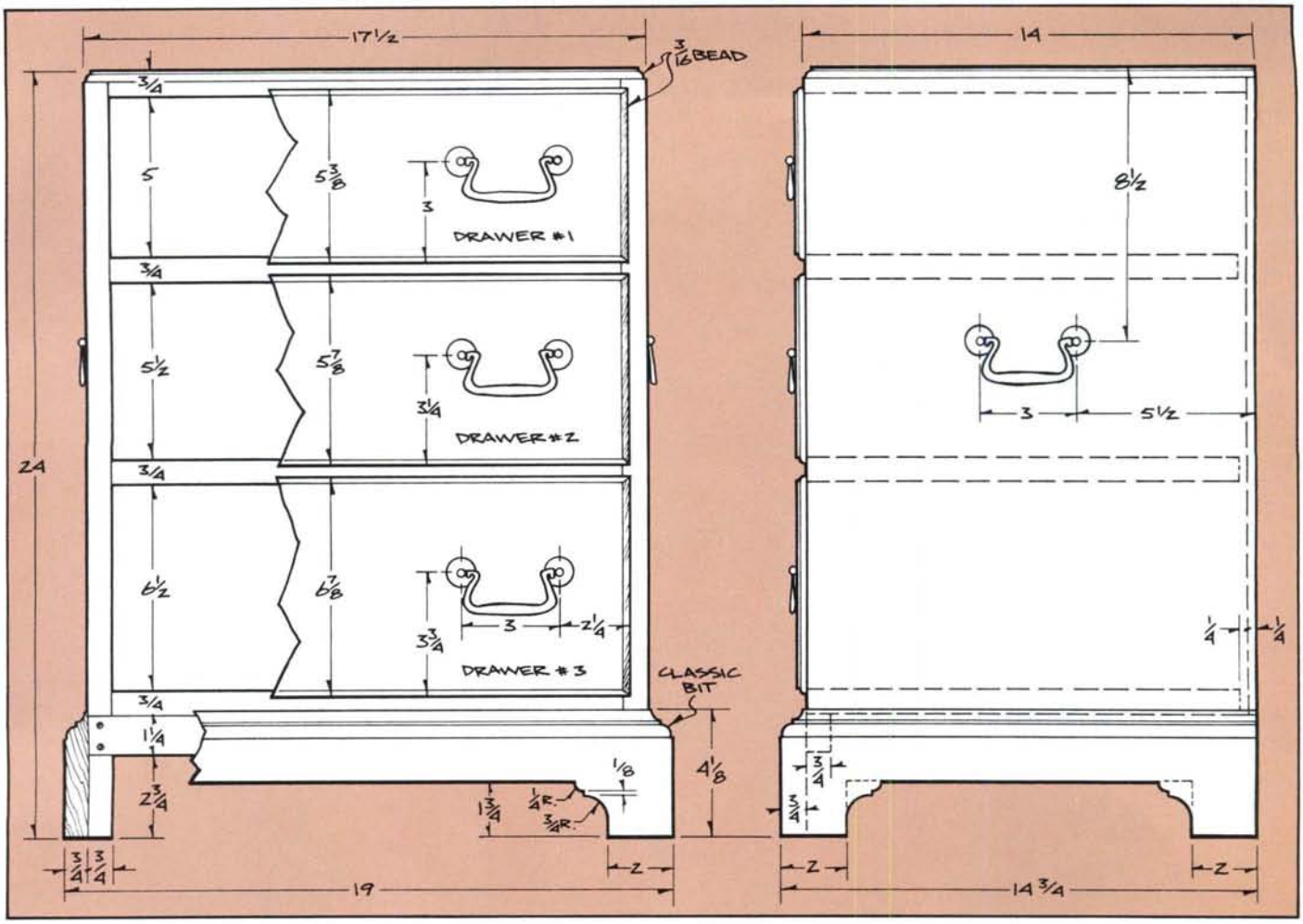

You'll probably need to edge-glue stock for the top (A) and sides (B). Glue up enough wood to provide both the top and sides from a single length. Later, by crosscutting first one side, then the top, and then the opposite side in that order, you'll achieve a very attractive detail — the continuous matching of grain as it flows from the sides into the top.

While you are waiting for the edge-glued stock to dry, cut the stretcher (C) and drawer frame parts (G, H). Note that a slip joint is cut on the ends of the drawer frame parts so they may be assembled before mounting in the case (see Drawer Frame Detail). Also note the ⅛ in. by ½ in. notch on the front corners of the drawer frames. This notch enables the drawer frames to fit into the stopped dadoes that are cut into the sides of the case. Drill slotted screw holes in the drawer frame sides, as indicated, to permit wood movement across the width of the case sides. The screw holes near the front are not slotted. This arrangement keeps the drawer frames and sides flush at the front, while directing any movement that might occur toward the back. As you'll note from the Bill of Materials, both the drawer frames and the drawers are sized to stop ¼ in. short of the plywood back (D) in order to accommodate this movement.

Once the stock for the top and sides is out of clamps, you can start work on these parts. Crosscut the parts to length in the order noted earlier. The crosscut length of the top will be 17½ in. The actual final length will be slightly less after the case is assembled and the bead is cut. Now lay out the blind dovetails that join the top and sides. The dovetail layout is shown in the Top View Detail, and our Woodworking Basics article on page 23 provides step-by-step instructions for making blind dovetails. You could substitute other types of joinery to fasten the top to the sides, but the blind dovetails provide maximum strength.

With the dovetails cut, next cut the rabbet in the sides and top to accept the plywood back. Note that the rabbet for the back in the top is ¼ in. deep by ½ in. wide, and the rabbets in the sides are ¼ in. deep by ⅜ in. wide. Notch the bottom ends of the sides, as shown, to match the width and height of the base side profile. Notch the front edge of the sides to accept the half-lapped stretcher, and cut the stopped dadoes in the sides to fit the drawer frames. Whether you use the table saw or the router to establish the stopped dadoes, the stopped end of the dadoes must be squared by hand, using a chisel.

Now assemble the top and sides around the three drawer frames. As explained in the Woodworking Basics article, you may need to add slips of veneer to fill gaps in the blind dovetails. The drawer frames are glued along the front end of the stopped dado, but not along the back two-thirds. This helps prevent the sides from developing cracks, which could happen if the drawer frames were glued and screwed along their entire length. Remember to keep the frames flush with the case sides at the front. Add the stretcher and the back. The back, if it is cut accurately, serves to help square-up the case. Use glue and screws to secure the back. When dry, use the router and a 3/16 in. radius ball-bearing guided beading bit to establish the bead on the top front and sides.

(continued on next page)

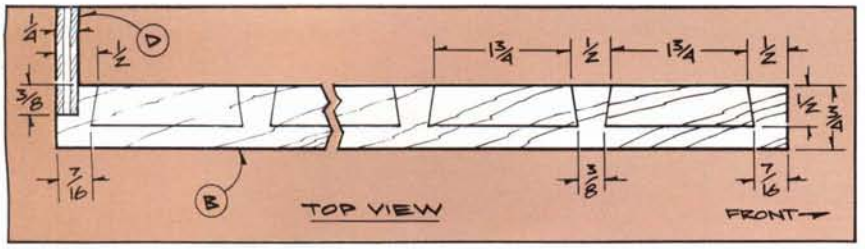
TOP VIEW
FRONT
1¼
½
3/8
7/16
1¾
½
1¾
½
½
¾
3/8
7/16
D
B

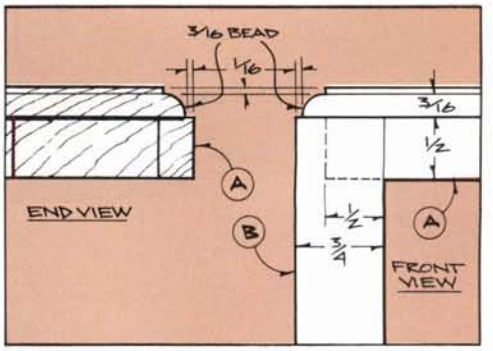
3/16 BEAD
1/16
3/16
½
END VIEW
FRONT VIEW
A
B
½
¾

G
1⅛
¾
11¼
1⅛
SLOTTED HOLE
H
DRAWER FRAME DETAIL
G
⅛
¾
¼
¼
⅝
⅞
½

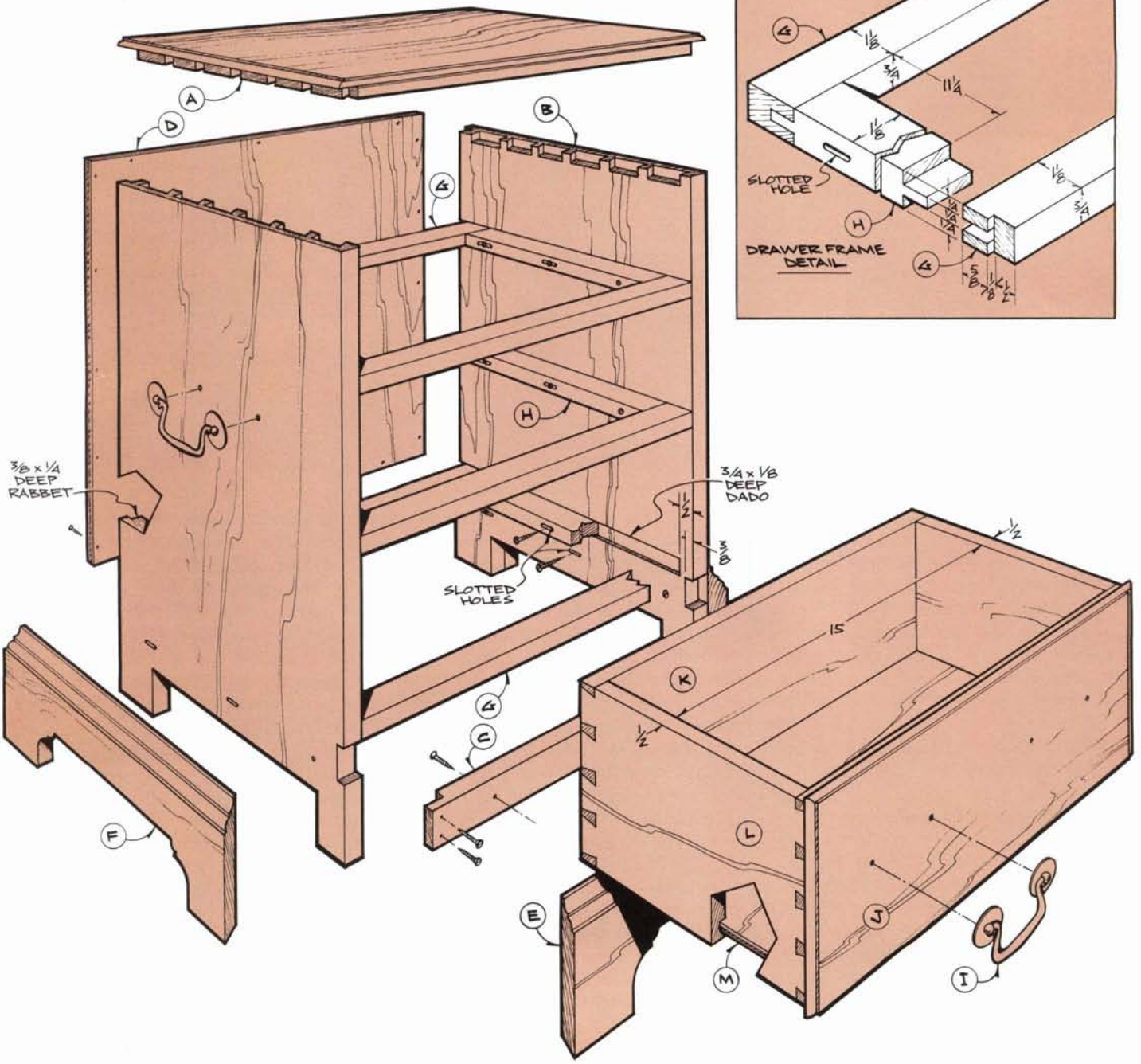
A
D
B
G
H
3/8 x ¼ DEEP RABBET
3/4 x 1/8 DEEP DADO
½
3/8
SLOTTED HOLES
G
C
F
E
½
15
K
½
L
J
M
I

Bill of Materials
(all dimensions actual)

Case

Part	Description	Size	No. Req'd.	Part	Description	Size	No. Req'd.
A	Top	¾ × 14 × 17½*	1	F	Base Side	¾ × 4⅛ × 14¾	2
B	Side	¾ × 14 × 23¾	2	G	Drawer Frame Front/Back	¾ × 1⅛ × 16¼	6
C	Stretcher	¾ × 1¼ × 17½	1	H	Drawer Frame Side	¾ × 1⅛ × 12½	6
D	Back	¼ × 16¾ × 19¾	1	I	Bail Pull (brass)	3 in. on center**	8
E	Base Front	¾ × 4⅛ × 19	1				

Drawers

Part	Description	No. Req'd. Per Drawer	Drawer 1	Drawer 2	Drawer 3
J	Front	1	¾ × 5⅜ × 16⅜	¾ × 5⅞ × 16⅜	¾ × 6⅞ × 16⅜
K	Back	1	½ × 5 × 16	½ × 5½ × 16	½ × 6½ × 16
L	Side	2	½ × 5 × 13½	½ × 5½ × 13½	½ × 6½ × 13½
M	Bottom	1	¼ × 13 × 15½	¼ × 13 × 15½	¼ × 13 × 15½

* Length is before bead is cut.
** Available from Anglo-American Brass Co., P.O. Box 9487, San Jose, CA 95157; Tel. (408) 246-0203. Order part no. B-8B. Cost is $4.50 each plus shipping.

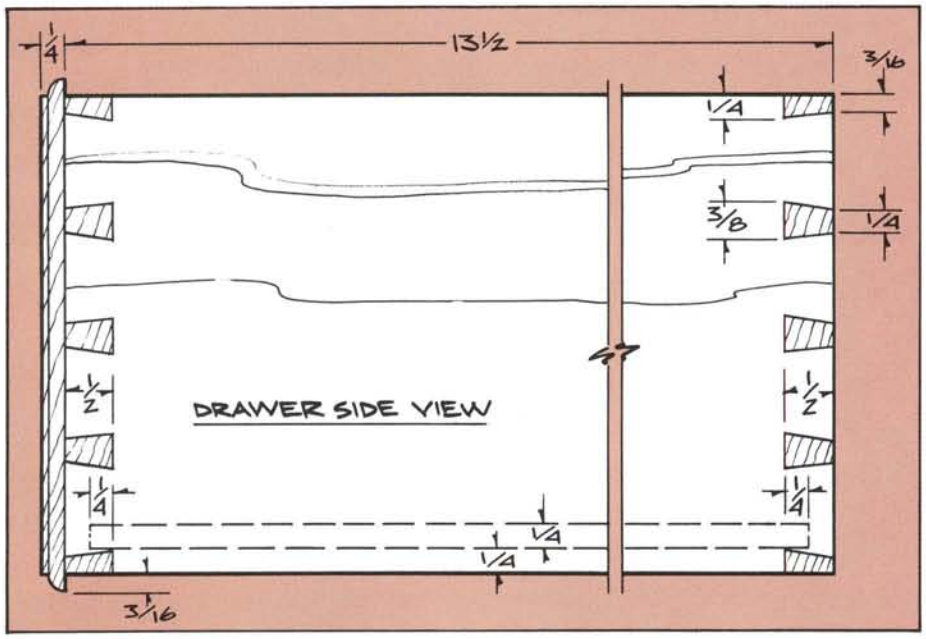

The depth of cut is set so that there will be a 1/16 in. shoulder above the bead.

Next, cut the base front and sides (E, F). Start with a length of stock ¾ in. thick by 4⅛ in. wide by about 50 in. long. Establish the molded edge using the table saw and a molding-head cutter. We used a Sears cutter (their part no. 9BT2352). Then crosscut the base front and sides to approximate length, cut the profile as shown, and finally miter the ends that meet at the front. Glue and screw the base front and sides to the case. However, on the base sides use glue only toward the front and at the miters. Screws through slotted holes in the case sides allow the sides freedom to move in relation to the base. The slotted holes may seem like a fussy point, but they help to insure that a fine piece like this will stay together for a lifetime and not just a few years.

You can now get to work on the drawers. Start with the drawer fronts (J). Establish the bead around the front, and then cut the 3/16 in. deep by ½ in. wide rabbet all around that enables the drawer front to fit into the drawer opening. Don't assume that each drawer opening will be identical to the dimensions that we show. Instead, make the drawer fronts to fit the actual drawer openings as measured from your case. Mill stock for the drawer backs (K) and sides (L). We chose a light colored hardwood, such as maple, for the sides and backs. The lighter sides contrast nicely with the cherry drawer fronts, highlighting the half-blind dovetails. These dovetails are cut using the same basic technique that you used for the case top-to-sides full-blind dovetail joinery. However, the tails on the drawer sides will be easier to cut than the tails on the case top, since they are through and not blind. Use the pin layout illustrated in the Drawer Side View Detail. Each of the drawers features the same number of pins. Lay out the pins by first marking their centers, using the system described in our shop tip on page 66. You'll position the piece of cardboard or ruler so the centerpoint of the first and last pins are ⅛ in. from the edge.

Once the dovetails have been cut and test-fitted, you can cut the drawer bottoms (M) to size from ¼ in. thick plywood (we used birch), and assemble the drawer fronts, back and sides around them. Make certain that the drawers are square (check with a framing square), and sand the dovetails flush once the drawers are out of clamps.

After final sanding, we finished this piece with several coats of penetrating oil followed by paste wax. We then mounted the Chippendale bail-style brass pulls (see Bill of Materials for ordering information). Note that the brass pulls are slightly off-center in their position relative to the drawer front heights and to the case height. We didn't use levelers on this piece, but you could easily add them if your floors are uneven.

Stacking Desk Trays

When we first saw these Stacking Desk Trays at the Valley Forge Buyer's Market in Pennsylvania last February, they were so new that the designer, Oregon woodworker Fred Terbrusch, hadn't yet taken publicity photos. Now he reports that they're his top selling item. They are one of the nicest adaptations in wood of a common desk accessory that we've seen in some time.

The photo shows a single letter tray stacked over a single legal tray, but you can add more trays if you have the need. The trays shown are crafted in koa, a wood that's native to Hawaii. To provide structural stability and avoid cupping, the tray bottoms (A) and backs (C) are made by edge-gluing a series of narrower boards in order to get the 9¼ in. width.

As you'll note from the Bill of Materials, all the stock — except for the connectors (D) — is ¼ in. thick. A thickness planer isn't a necessity, but it simplifies surfacing stock to the final ¼ in. thickness. If you don't have a thickness planer, you'll need to resaw stock.

Once you've planed and edge-glued the stock, most of the work is done.

Bill of Materials
(all dimensions actual)

Part	Description	No. Req'd. Per Tray	Letter Size	Legal Size
A	Bottom	1	¼ × 9¼ × 12⅛	¼ × 9¼ × 15⅛
B	Side	2	¼ × 2½ × 9	¼ × 2½ × 12
C	Back	1	¼ × 9¼ × 2½	¼ × 9¼ × 2½
D	Connector	3	¾ × 1½ × 2	

The back can be cut from the same length of stock that you used for the bottom, if you've allowed for the extra length. The ⅛ in. deep by ¼ in. wide groove in the sides (B), and the identically sized dado in the back, are cut on the table saw using a dado head, or on the router table with a ¼ in. diameter straight cutter. Remember, a groove is with the grain, a dado across the grain. The curved profile on the front end of the bottoms can be transferred to the stock using the grid pattern, and cut out with a band saw. This cutout makes it easier to remove papers from the tray. Don't forget to nip the front corners of the sides at 45 degrees, as shown.

After final sanding, glue and assemble the trays. Don't be too generous with the glue, or you'll wind up having to scrape away the squeeze-out. Make certain that the sides and backs of the trays are square to the bottom.

To make the connectors, start with a long length (at least 16 in.) of ¾ in. thick by 1½ in. wide stock, then establish the ¼ in. deep by ¼ in. wide grooves in both edges, and finally crosscut the connectors to their 2 in. lengths. The long starting length is important because it makes it safer to cut the grooves and crosscut the connectors to length. Locate the connectors toward the front to prevent the upper tray from tipping when loaded with paper. The connectors are not glued to the side.

Three coats of Watco oil, followed by an application of paste wax, will help to show off the lovely figure of your koa desk trays.

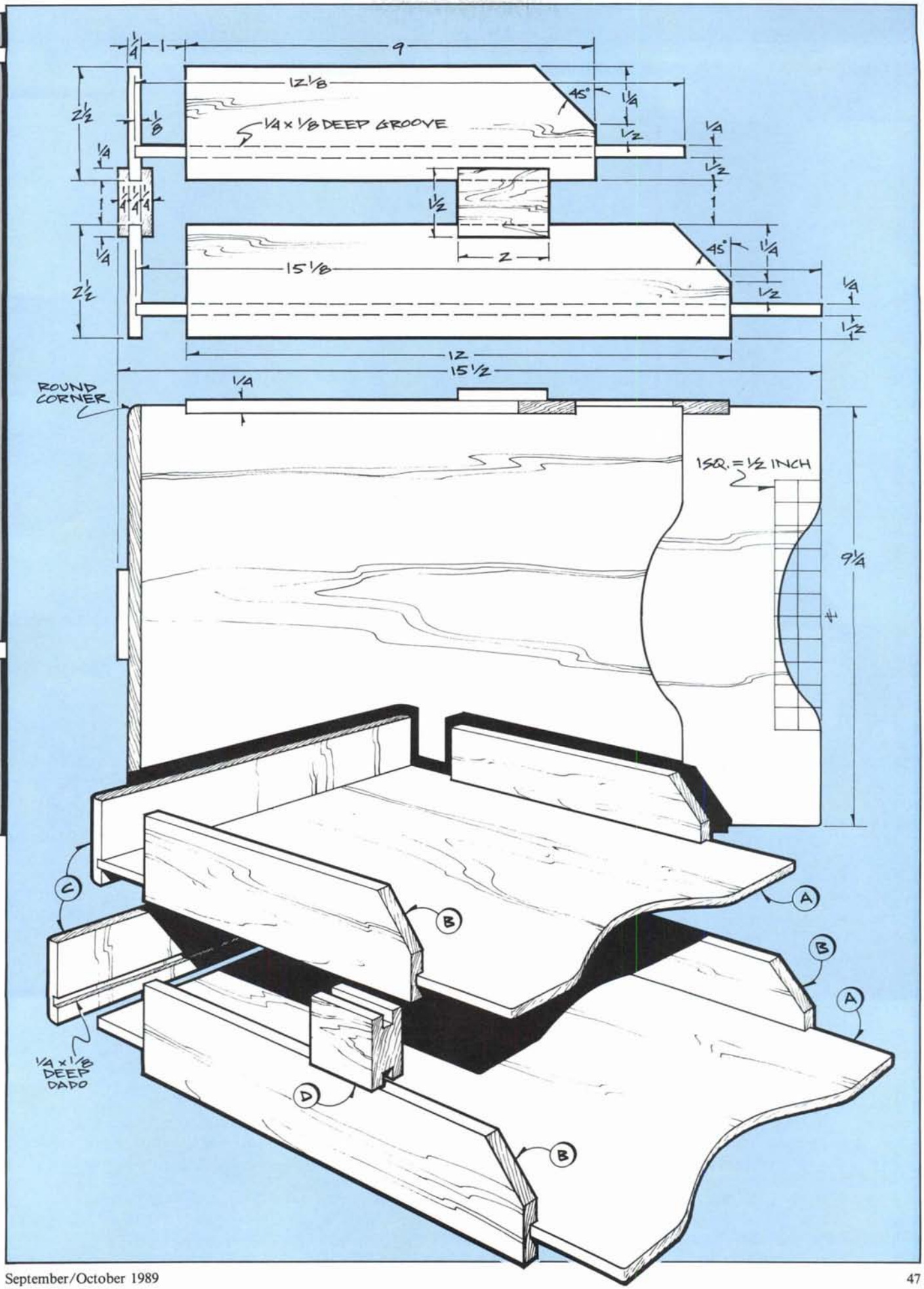
1/4
1
9
12 1/8
45°
1 1/4
1/2
2 1/2
1/8
1/4 x 1/8 DEEP GROOVE
1/4
1/2
1/4 1/4 1/4
1/2
1
1/4
2
45°
1 1/4
2 1/2
15 1/8
1/2
1/4
1/2
12
15 1/2
ROUND CORNER
1/4
1SQ. = 1/2 INCH
9 1/4
C
B
A
B
A
1/4 x 1/8 DEEP DADO
D
B

PENCIL BOX

California craftsman Tony Lydgate makes these pencil boxes from a variety of contrasting exotic woods. The photo shows four different combinations. Koa, padauk and bird's-eye maple are a few of the woods that Lydgate favors.

Start with a block 12½ in. long by 1⅞ in. wide by 13/16 in. thick. Sand both faces up to 120-grit, and cut a ⅛ in. deep by 3/16 in. wide rabbet on two opposite edges (Fig. 1). Then use the band saw to resaw the piece down the middle to get the stock for the sides (A) and ends (B). The sanded surfaces will be the inside of the box, and the rabbet is for the bottom (C). After resawing, you'll have stock that's just a little over 5/16 in. thick. Since the setups for this project take more time than the actual cutting, Lydgate points out that you might want to make several boxes.

Now stack the two pieces you just resawed and crosscut them into sides a little longer than 10 in. and ends just over 2 in. After setting the table saw blade and checking that it's a true 45 degrees, miter the sides so they are exactly 10 in. long. Use a stop on the miter gauge fence. Since these pieces are small, and your hands do come fairly close to the blade, make certain that the blade is set at the minimum necessary height. We recommend that you make a jig to hold the box ends, which are only 2 in. long. As shown in Fig. 2, this jig is simply a piece of ¼ in. thick plywood screwed to the bottom edge of an auxiliary miter gauge fence, with a stopblock glued in place for establishing the length of the piece being cut. Use a pushstick as illustrated to hold the workpiece.

Dry assemble the sides and ends with masking tape in order to fit the bottom. Be sure to select an attractive wood for the bottom, since this provides a nice added detail when someone turns the box over or looks inside. Finish sand the inside surface of the bottom. Now glue up the box around the bottom using masking tape as clamps. Don't be too generous with the glue or it will make for a messy assembly.

When dry, cut the spline grooves in the box corners using the spline cutting jig (Fig. 3). This jig is two pieces of stock glued and screwed to a section of plywood or particleboard. Make sure the sides of the jig are at 90 degrees to each other and at 45 degrees to the saw table, as illustrated. Lydgate uses ebony splines, although other woods will work as well. He suggests that you try using three or four splines in each corner, instead of two, for variety. The splines are cut slightly oversize and then trimmed and sanded flush when the box sides are final sanded.

The top (D) is a combination of several contrasting woods that are laminated together. The side view shows one suggested layout, though the number of strips and their thickness can easily be varied. A rabbet around the top creates a lip that keeps it in place on the box. Cut this rabbet wide enough so there's a little play, or the top may get stuck when the wood swells slightly in humid weather. With the top in place, the box is final sanded up through 220-grit.

Two coats of Watco oil followed by an application of a good quality paste wax complete this project.

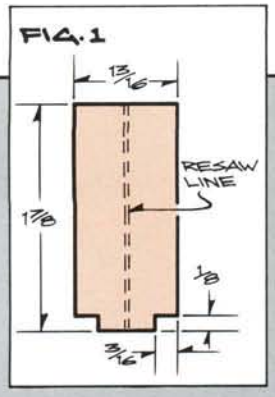

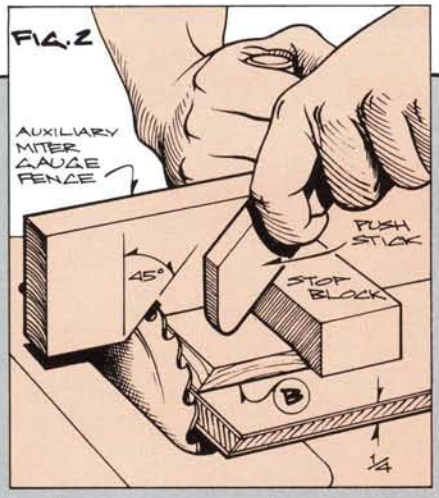

Bill of Materials
(all dimensions actual)

Part	Description	Size	No. Req'd.
A	Side	5/16 × 1 7/8 × 10	2
B	End	5/16 × 1 7/8 × 2	2
C	Bottom	1/8 × 1 3/4 × 9 3/4	1
D	Top	1/2 × 2 × 10*	1

* Note that the top is laminated from contrasting woods, then cut to the final size.

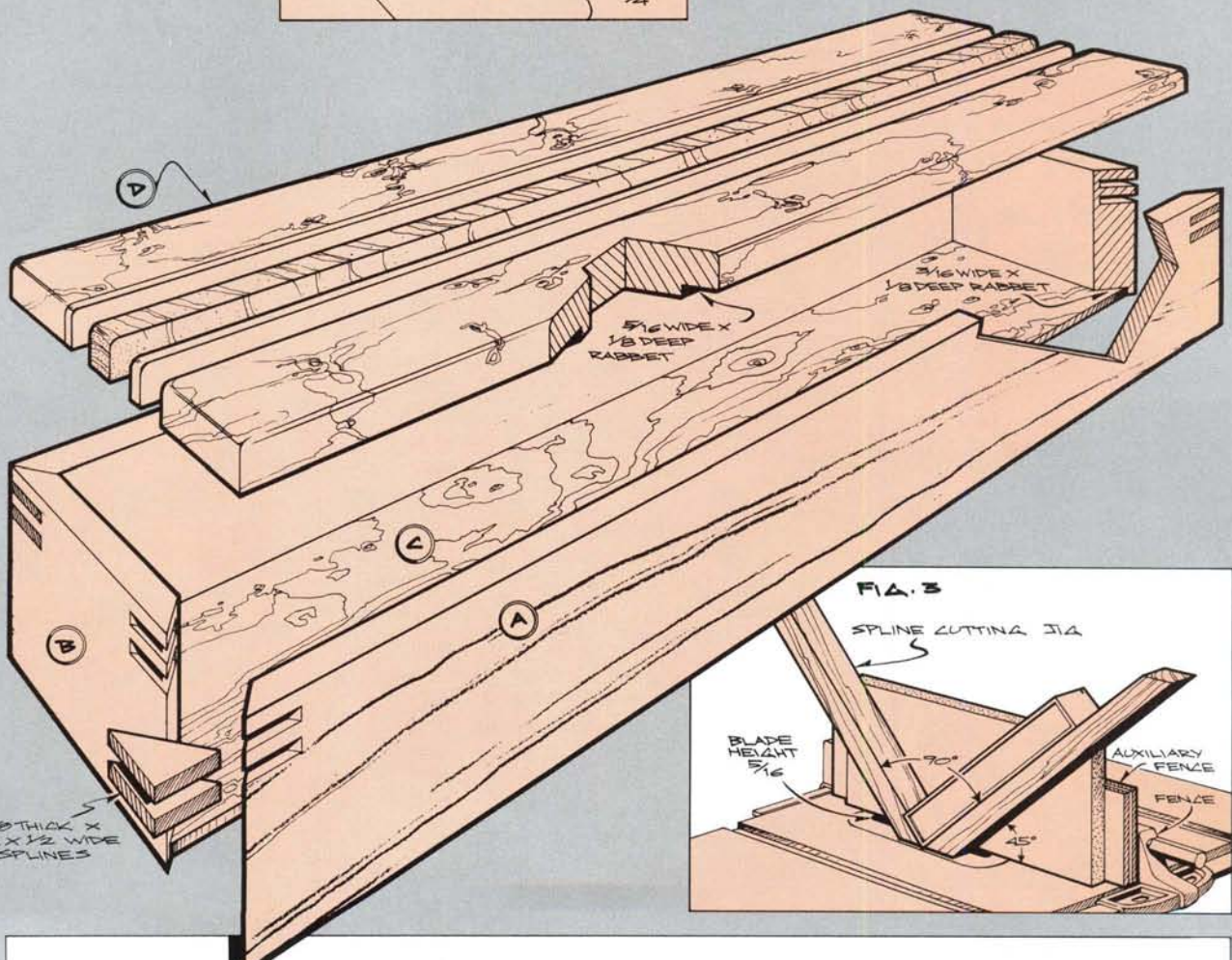

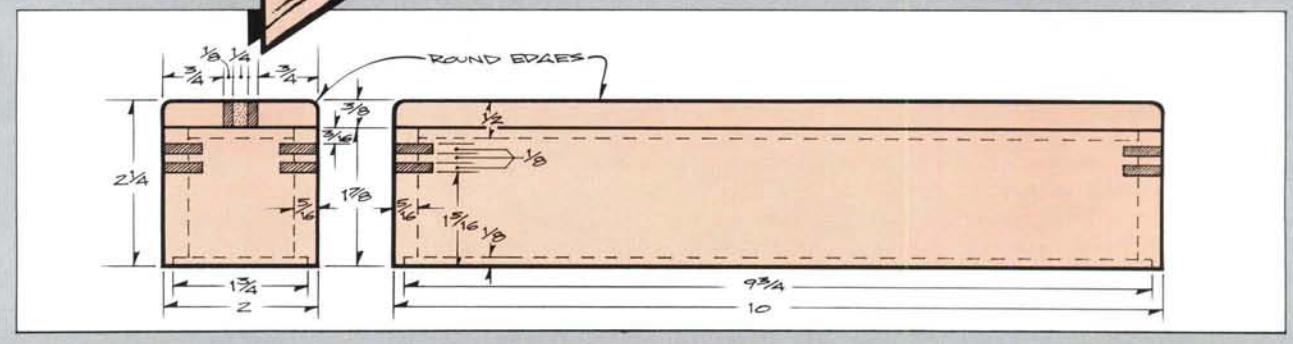

Apple DOORSTOP

Doorstops always come in handy. Nearly every house seems to have at least one door that closes with a will of its own. And the slam of a windblown door can be jarring, as well as dangerous to passing toddlers and other small creatures.

This doorstop is easy to make. All you need is a scrap of ¼ in. thick plywood and a small piece of pine. Cut and taper the pine block as shown and establish the mortise with a chisel. (If you have an unusually wide gap between the bottom of your door and the floor, you may need to use thicker stock for the base.) Use a hand plane to make the taper. A couple of dabs of glue in the mortise will hold the plywood. No clamps are needed.

We used enamels to paint the doorstop. First establish a base coat of flat paint and then apply the semi-gloss colors: red for the apple, green for the leaf, and brown for the stem and base. Use one application of the flat base coat and two coats of semi-gloss.

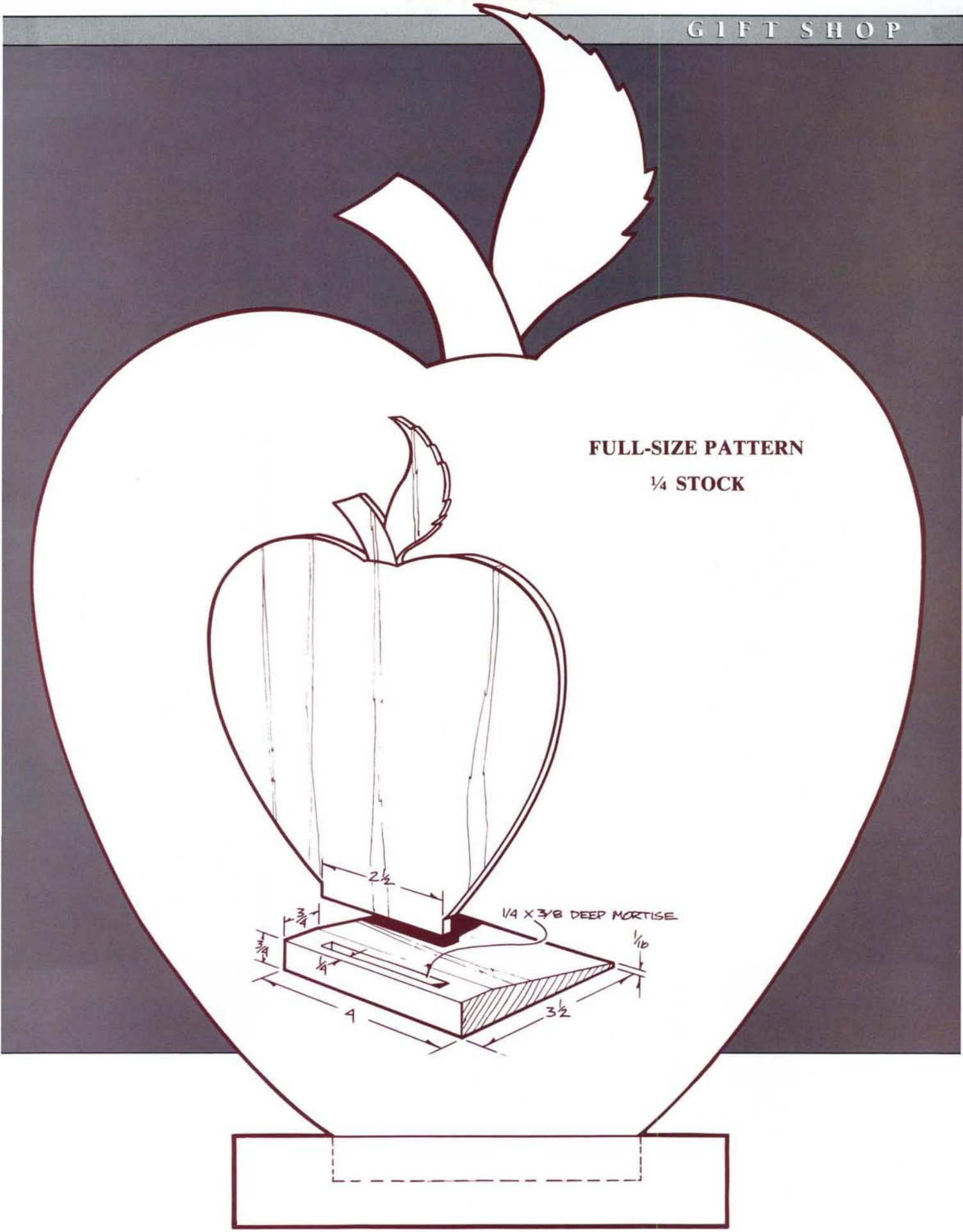
FULL-SIZE PATTERN
¼ STOCK
2½
¾
¾
¼
1/4 X 3/8 DEEP MORTISE
1/16
4
3½

SPACE SHUTTLE TOY

The wheels on this Space Shuttle Toy may be earthbound, but that won't stop the imaginations of little riders from soaring off above the clouds. The toy is designed by a California company, Barrels of Fun. The company also supplies a parts kit, which includes the NASA and U.S. flag decals, the wheels, and the assorted nuts and bolts (see Bill of Materials).

Stock for many of the parts in the shuttle may already be lying around your workshop. The fuselage (A) is made from a 2 by 6, the wing (C) is a piece of ¾ in. plywood. The tail (B), seat (E), and wheel housing sides (J) are made from ½ in. plywood. The wheel housing tops (I) can be cut from 2 by 4 or 2 by 6 stock. The handle (G) and the steering shaft (H) are made from another common item, ¾ in. diameter dowel. You'll also need some ¼ in. diameter dowel for locking pins on the steering assembly and some 2 in. diameter dowel for the rocket engines (D) and the steering control hub (F). Your local lumberyard might not have the 2 in. diameter dowel, so you might have to turn a small section on a lathe or substitute a piece of stair railing. The stair railing generally has a flat on the underside. Remember when choos-

(continued on next page)

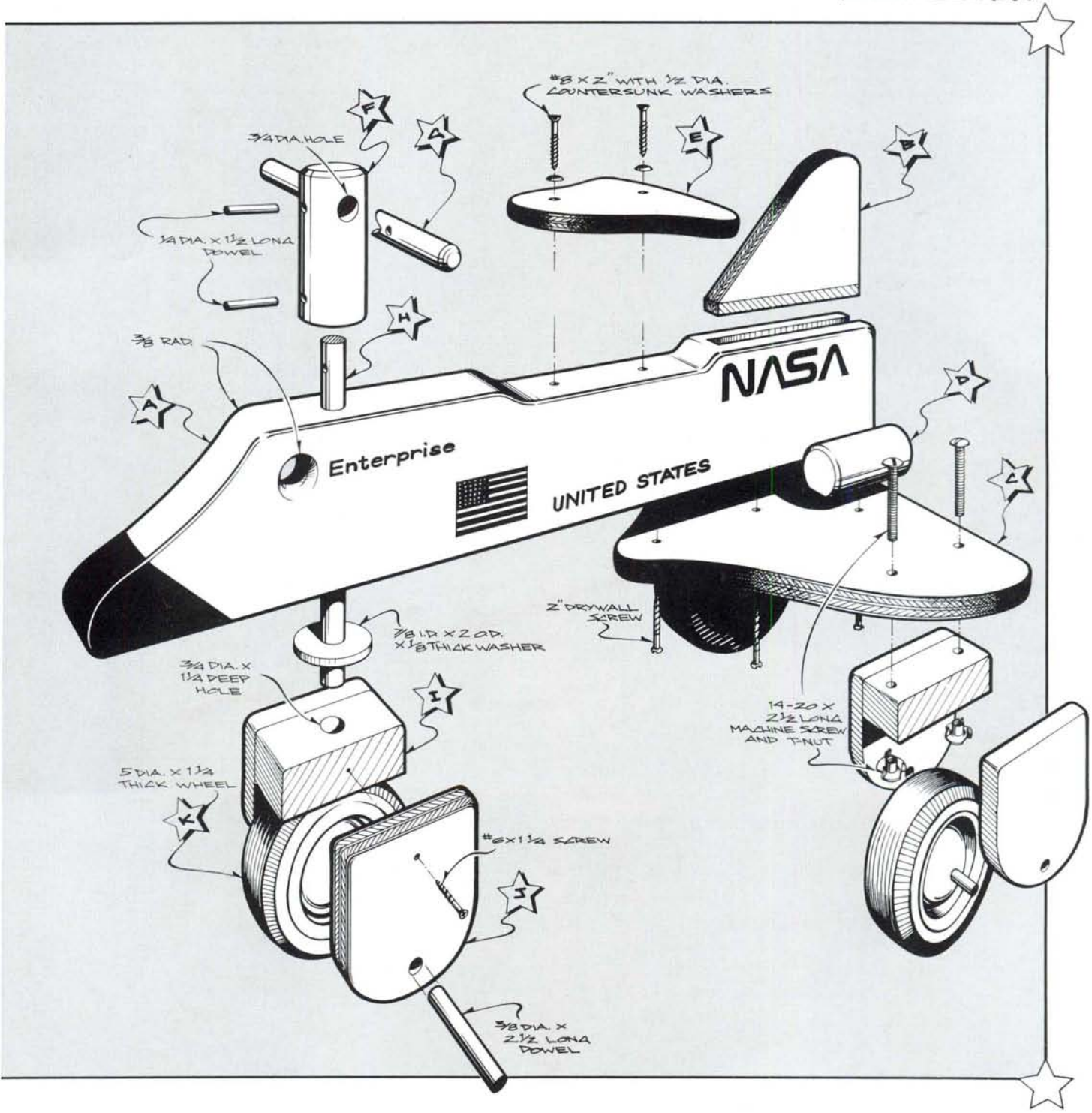

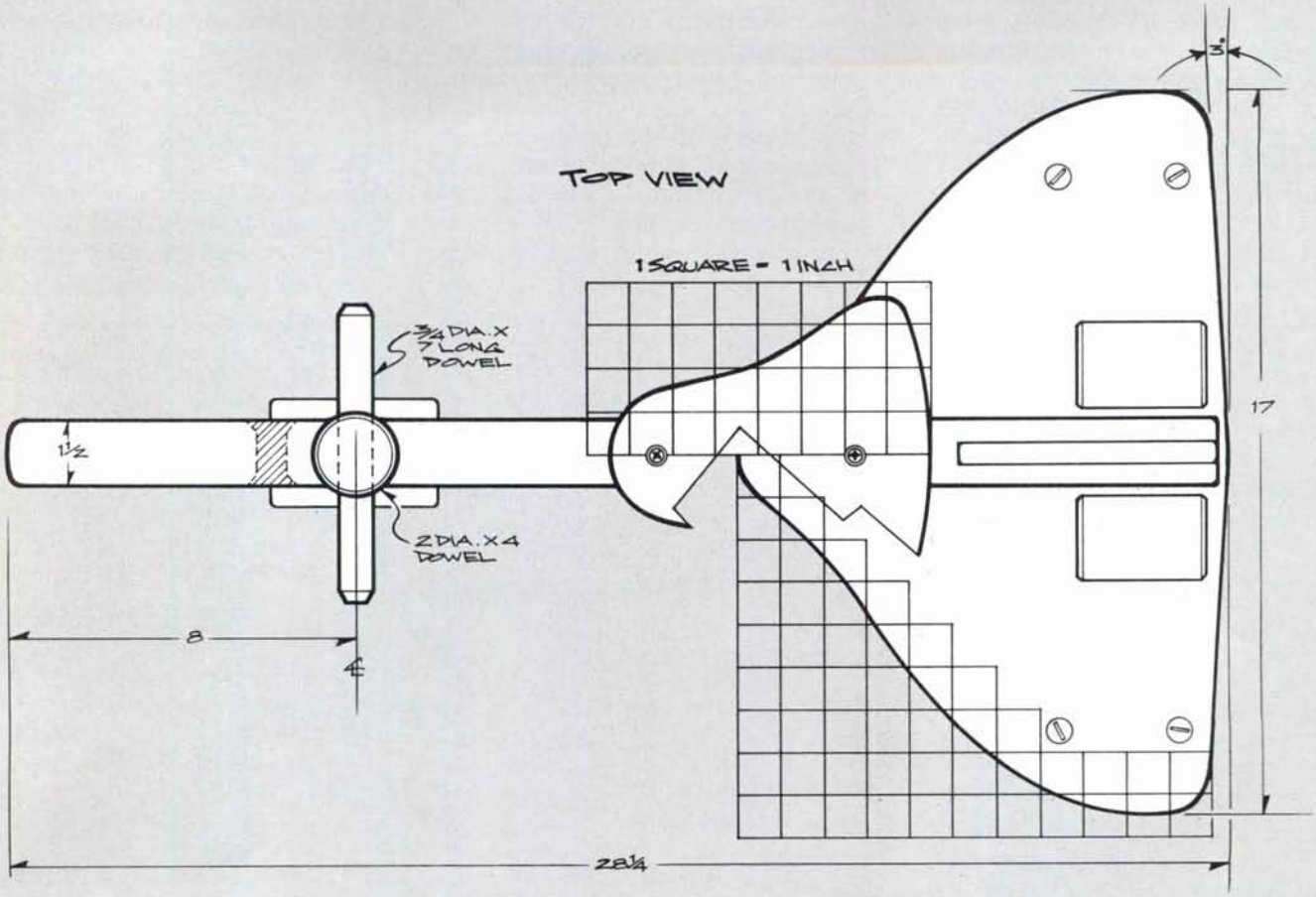
TOP VIEW
1 SQUARE = 1 INCH
3/4 DIA. X 7 LONG DOWEL
2 DIA. X 4 DOWEL
1 1/2
8
4
3°
17
28 1/4

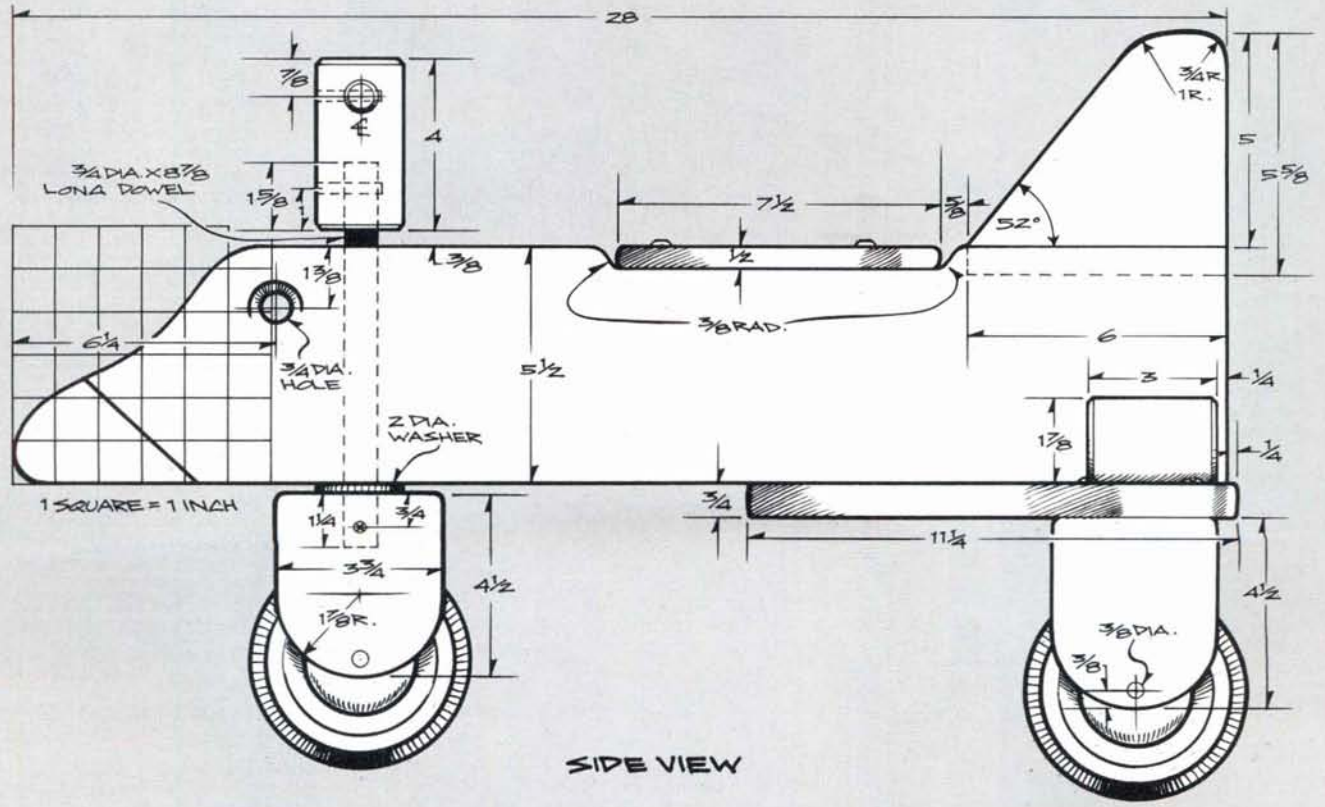
28
7/8
4
3/4 DIA. X 8 7/8 LONG DOWEL
1 5/8
1
1 3/8
3/8
6 1/4
3/4 DIA. HOLE
5 1/2
2 DIA. WASHER
1 SQUARE = 1 INCH
1 1/4
3/4
3 3/4
1 7/8 R.
4 1/2
7 1/2
5/8
1/2
3/8 RAD.
52°
3/4 R.
1 R.
5
5 5/8
6
3
1/4
1 7/8
1/4
3/4
11 1/4
4 1/2
3/8 DIA.
3/8
SIDE VIEW

Bill of Materials
(all dimensions actual)

Part	Description	Size	No. Req'd.
A	Fuselage	1½ × 5½ × 28	1
B	Tail	½ × 5⅝ × 6	1
C	Wing	¾ × 11¼ × 17	1
D	Rocket Engine	2 in. dia. × 3 long	2
E	Seat	½ × 7¼ × 7½	1
F	Control Hub	2 in. dia. × 4 long	1
G	Handle	¾ in. dia. × 7 long	1
H	Steering Shaft	¾ in. dia. × 8⅞ long	1
I	Wheel Housing Top	1½ × 1½ × 3¾	3
J	Wheel Housing Side	½ × 3¾ × 4½	6
K	Wheel	5 dia.*	3

* Parts supplied as a kit, which costs $9 plus postage and handling. The kit also includes U.S. flag and the NASA logo decals as well as the machine screws, wood screws, drywall screws and washers needed to complete the project. Write to Barrels of Fun, 4856 Hirsch Rd., Mariposa, CA 95338; Tel. (209) 966-2200.

ing your wood that the shuttle is painted, so it doesn't matter much what kind of wood you use as long as it's sturdy enough to take a beating. We specify plywood for the seat and wings because they are subject to the most stress.

Start by cutting the stock to the sizes given in the Bill of Materials. Then cut profiles on the fuselage, seat, tail and wing. A hand-held jigsaw or a band saw work well for the profile cuts. Also lay out and cut the radii on the wheel housing sides. Turn the rocket engines and the control hub, and plane a small flat on one side of each of the engines.

Then use a router with a ½ in. straight cutter to cut the groove for the tail in the fuselage. It's best to use the router mounted in the router table because there's not much of a surface to help guide the hand-held router. Make several passes with the router to achieve the final ⅝ in. depth. Then square up the end of the router cut with a chisel. Give all the parts a quick sanding with 120-grit paper to remove the nubs before you move on.

Now lay out the location of the various holes for the screws and bolts, as well as the "porthole." Make sure you drill pilot holes for all the screws, and shank holes for the bolts. Also note that ¼ in. diameter by 1½ in. long dowels secure the handle to the control hub, and the hub to the steering shaft. Drill the hole for the steering shaft 1/32 in. larger than the shaft itself, which is ¾ in. diameter. If you don't allow a little play, the shaft will stick. It's a good idea to use a drill press for the boring operation. If the angle isn't perpendicular, the shuttle will be difficult to steer. After drilling all the holes, round over the edges on the parts. Use a ⅜ in. diameter roundover bit in the router for the fuselage edges and the porthole. Then use wood files and sandpaper to round over the other parts.

Before proceeding to the painting, dry assemble the shuttle to make sure all the parts fit together. Don't push the dowel handle or the steering shaft all the way home. You may not be able to get them apart later. Instead, just make sure the parts fit together well and are not too tight or too loose. Before painting, you can glue and screw the wheel housing assemblies and glue the tail into the fuselage. To match the shuttle pictured, first apply a base coat of flat white primer on all the surfaces except the steering shaft, which isn't painted. After the flat paint dries, sand it with 220-grit paper and apply the black and white gloss enamels. You'll probably need two coats of the black. If so, sand between coats.

Next, assemble the shuttle using the hardware indicated. To line up the wheel with the handle, first assemble the handle, control hub and steering shaft, gluing the two dowels in place to hold the parts together. Then insert the steering shaft through the fuselage, apply the washer and fit it into the wheel housing. At this point you can still move the wheel in relation to the handle. Adjust it as needed and then drill a shank hole through the wheel housing and a pilot hole into the steering shaft. Countersink the shank hole and insert the screw to hold it in position.

Now soak the decals in water and apply them to the fuselage.

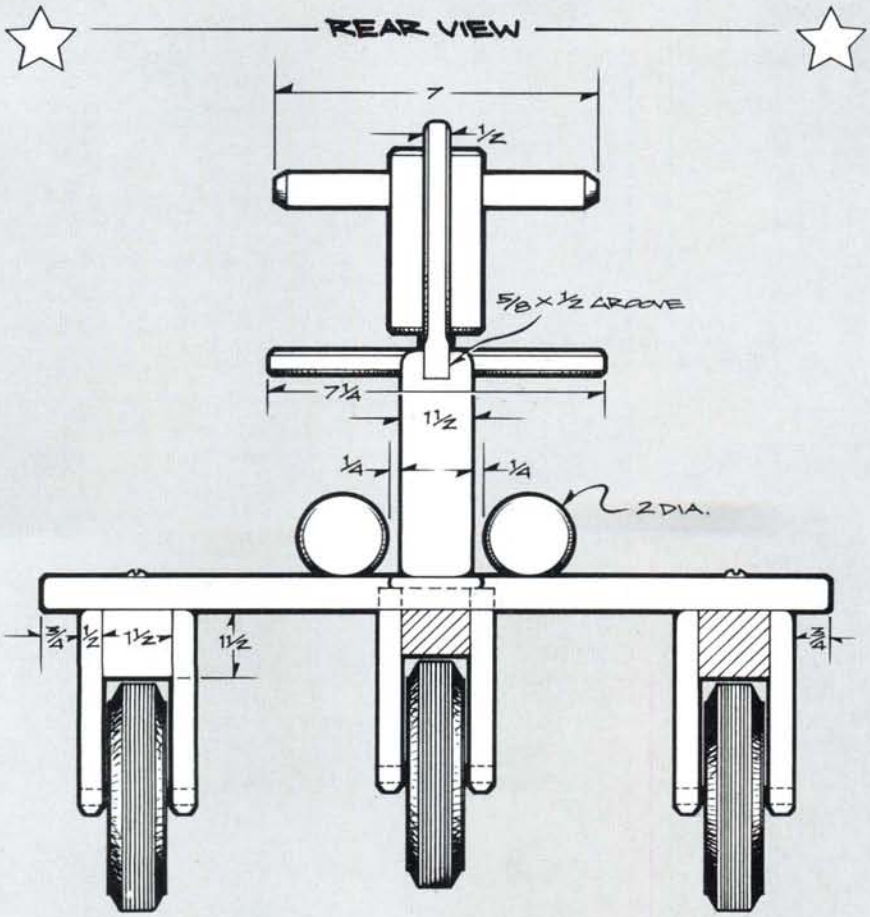

MARQUETRY COASTERS

As a use of wood for surface decoration, marquetry is a fascinating technique. Surprisingly, it's not quite as difficult as it might first appear to be. These marquetry-decorated coasters are an ideal project to get you started. The pad marquetry method that we used is quite easy, and it produces a different combination of veneers on each coaster.

Whether you decide to make the mountain scene, the Canada goose, or the dolphin, by following the step-by-step instructions in the Special Techniques article on page 26, you'll have the marquetry pictures assembled on contact paper, ready for application to the plywood coasters. Note that the veneer side that faces the contact paper will end up as the visible face once the gluing is complete and the contact paper has been removed.

In addition to the marquetry pictures on contact paper, you'll need seven ⅜ in. thick by 4 in. by 4 in. squares of hardwood plywood. We like Baltic birch, a high-quality imported plywood with few voids. You'll also need a 1 in. thick by 5 in. by 5 in. piece of hardwood (we used walnut) for the coaster rack base, and four ¼ in. diameter by 3¼ in. long dowels for the rack sides (again we used walnut). Finally, you'll need enough sheet cork to cover the bottoms of the coasters and the rack base.

The first step is to glue the marquetry to the coaster blanks. Apply an even coat of yellow glue to each square of hardwood plywood and lay the sheet of marquetry over it. The marquetry will be facing the plywood, with the contact paper on top. Stack the glued-up coaster blanks with marquetry one on top of the other. Don't worry about glue squeezing out; the contact paper prevents the coasters from sticking to each other. The seventh square of hardwood plywood is used on top of the stack as a clamping block (see Fig. 1). Now use four clamps — one on each side — to clamp

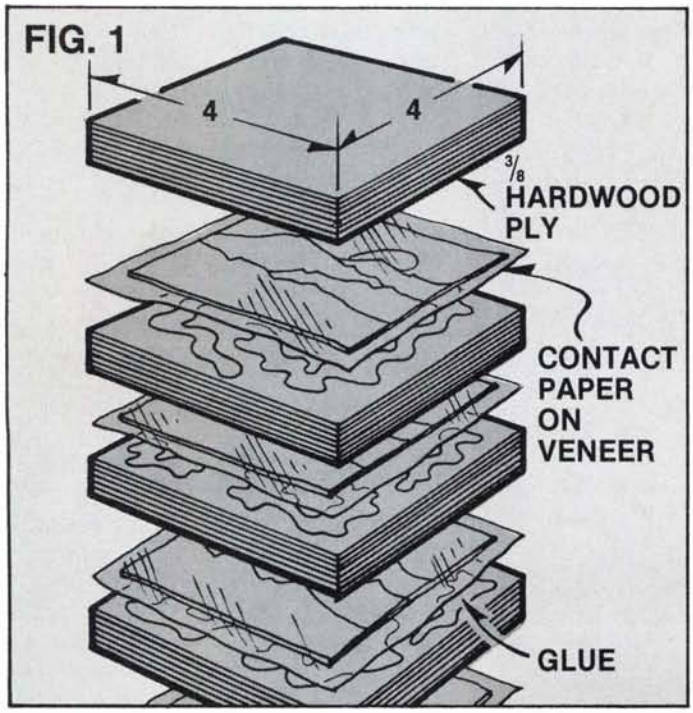

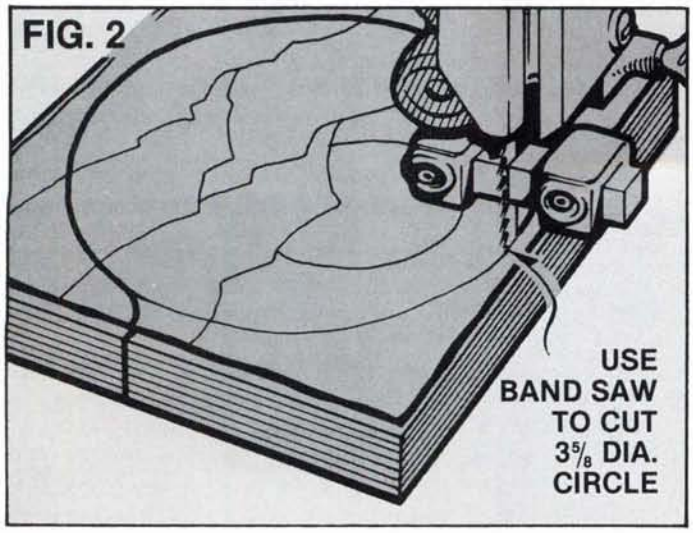

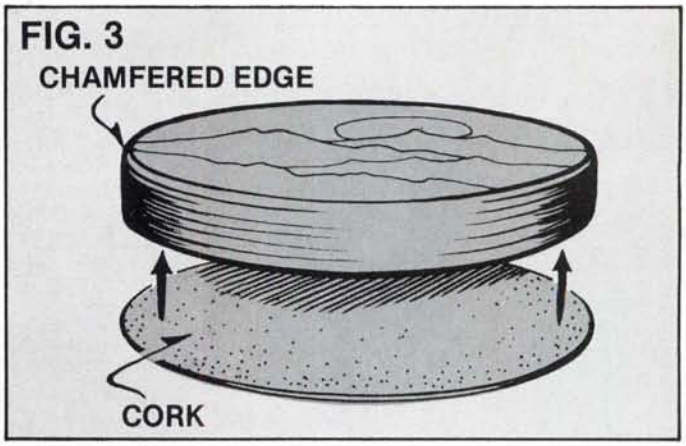

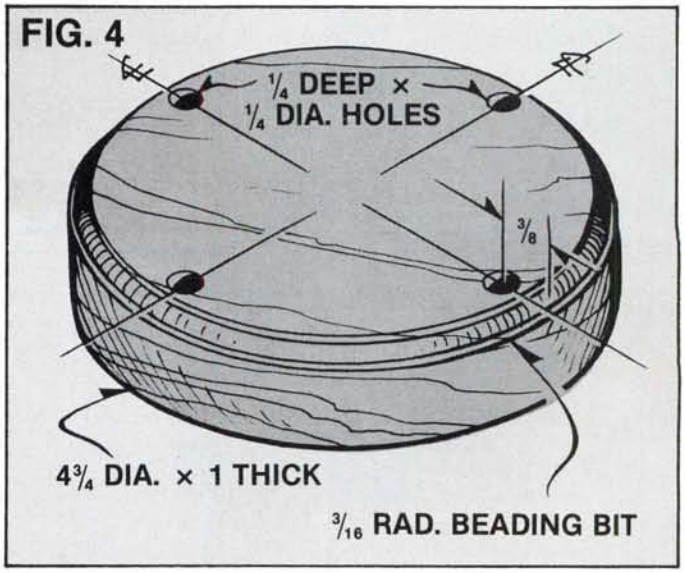

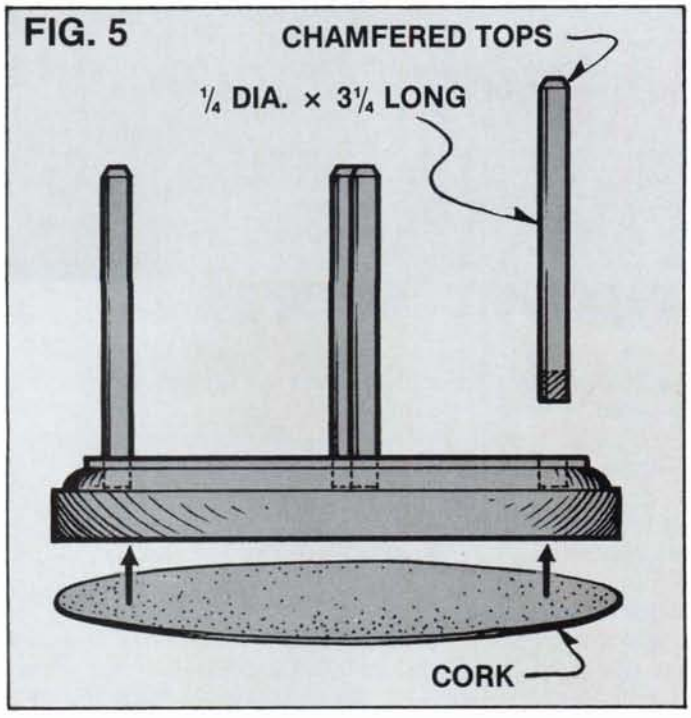

the stack tight. After letting the glue dry for at least one hour, remove the clamps, unstack the coasters, and pull off the contact paper. Let the glue cure for 24 hours.

Next, lightly sand the coasters with 120-grit paper to remove the excess glue. Then pencil a 3⅝ in. diameter circle on each coaster, and cut them out on the band saw (Fig. 2). A 3⅝ in. diameter template cut from a piece of scrap will simplify marking the circles. Sand the edges to remove any band saw marks, and establish a light chamfer around the top edge using 120-grit sandpaper. Buff-sand the coasters with 180-grit sandpaper, and apply a clear, water-resistant finish such as polyurethane. An aerosol can or a spray outfit is recommend since spraying produces an even surface. Two light coats are better than one heavy coat to reduce the chance of drips. Cut 3⅝ in. diameter circles of cork, and glue them to the bottom of each coaster (see Fig. 3).

To make the rack, first cut a 4¾ in. diameter circle from the walnut base blank and sand it smooth. Use the router table and a 3/16 in. radius beading bit to apply the edge detail, and then drill the four ¼ in. deep by ¼ in. diameter holes for the dowels that form the rack sides (see Fig. 4).

Cut the dowels to their 3¼ in. length, chamfer the tops (a pencil sharpener comes in handy for this) and glue them in place. After finishing the rack with polyurethane, glue the cork on the bottom (Fig. 5).

ICE CHEST
with Marbleized Top

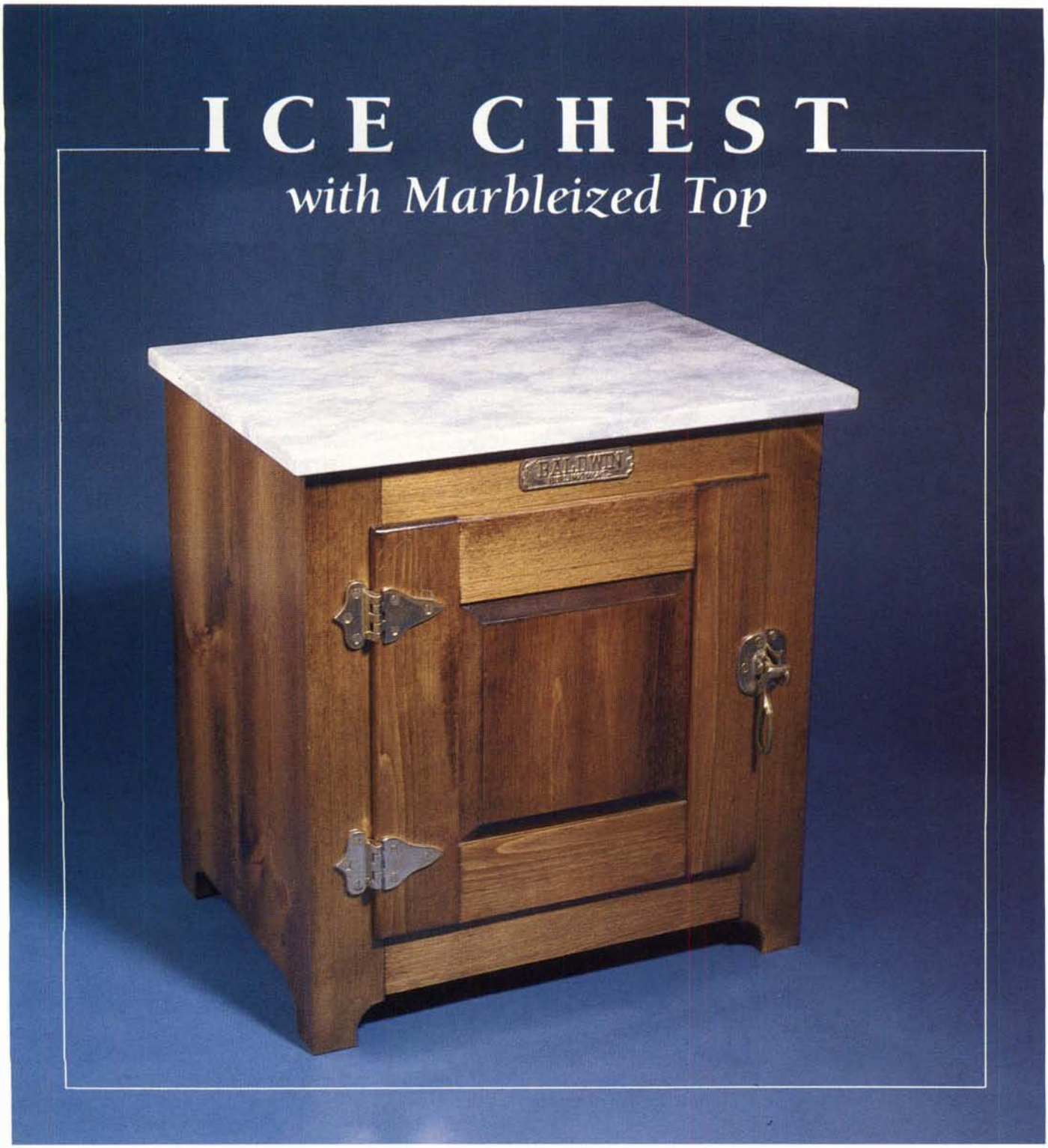

Our small Ice Chest is made of pine, with a top disguised as a slab of marble. The reproduction hardware gives it the look of pre-refrigerator society.

You can make the marbleized top as described in the Finishing article on page 30, or substitute a painted or varnished top.

Begin by gluing up six small panels, which will form the wider parts: the top (A), the two sides (B), the bottom (D), the shelf (E) and the raised panel (K). Make the panels slightly longer and wider than the finished sizes shown in the Bill of Materials. After the glue dries, cut the panels to final size, but leave the raised panel off to the side for now. It's best not to trim it down until the case is complete.

After cutting the panels to size, cut the other case parts, except the back (F), to the dimensions shown in the Bill of Materials. It's best to wait to cut the back to size until after the cabinet is assembled — or at least dry assembled — so you can get the finished size.

Next, cut the dadoes in the sides with a dado head in the table saw or a router. Note that the dadoes for the spreaders (C), as well as the rabbets on the spreaders, are ⅜ in. wide by ⅜ in. deep, so you should make both sets of cuts with the dado at the same setting (Figs. 1 and 2). The sides are cut with

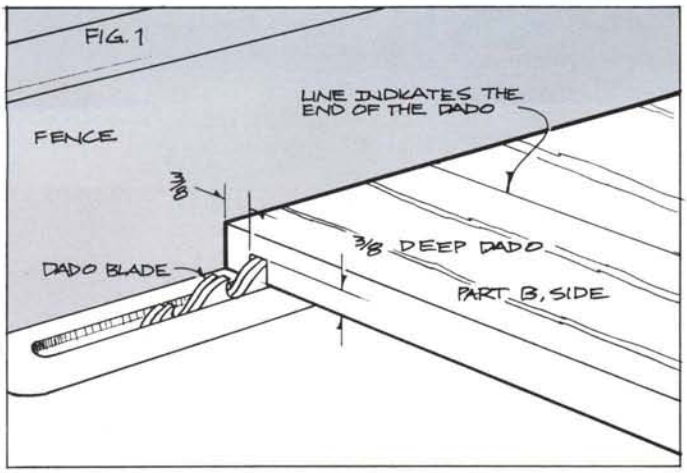

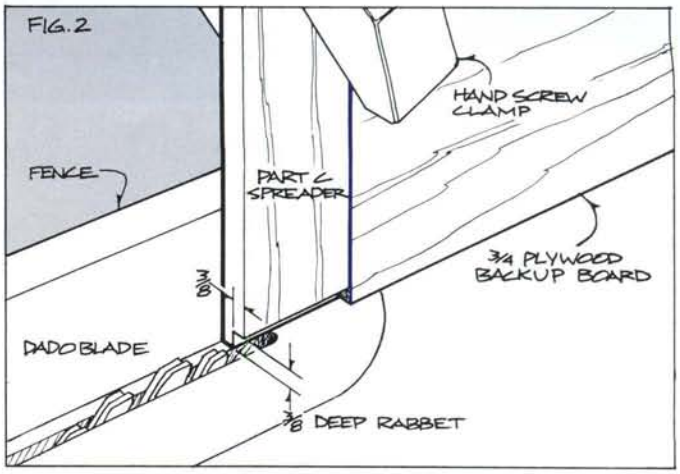

the workpiece lying flat on the saw table. The spreaders are cut with the workpiece on end. Be sure to support the spreader with a clamp and a ¾ in. thick piece of plywood or particleboard as shown in Fig. 2. Otherwise the workpiece can twist and pull your hand into the saw blade.

After establishing the dadoes in the sides and rabbets in the spreaders, move on to the face frame assembly. First cut the mortises and tenons (Fig. 3) in the face frame parts (G and H), then assemble the frame. When the glue dries, rabbet the face stiles as shown to fit into the sides.

With the case joinery completed, add the detail by cutting the profiles in the case sides and on the bottoms of the face-frame stiles.

Also lay out and bore the holes as shown for the adjustable shelf pegs. Then give all the parts a good sanding with 120-grit paper and dry assemble the cabinet. After you're sure that the cabinet will fit together properly, cut the plywood back to fit and glue the cabinet together. Note that screws add some strength where the bottom meets the sides. They should be counterbored and hidden with face-grain plugs. The top is left off until after the cabinet is finished.

While the glue is drying on the cabinet, you can measure the opening and start on the door. Cut the bevels of the panel on the table saw with the blade tilted to 17 degrees. To get a crisp panel, establish kerfs around the raised portion before you cut the bevel. Then you can set the saw blade height to cut just underneath the raised section, which you already established.

Remember to allow some room for the panel to expand by cutting the grooves in the stiles (I) and rails (J) ⅜ in. deep, which is ⅛ in. deeper than the ¼ in. the panel extends into the frame (Fig. 4). Also note that when you cut the angled rabbet around the edge of the door, you should have a pair of hinges (L) on hand. You may need to adjust the depth of the rabbet to allow

(continued on next page)

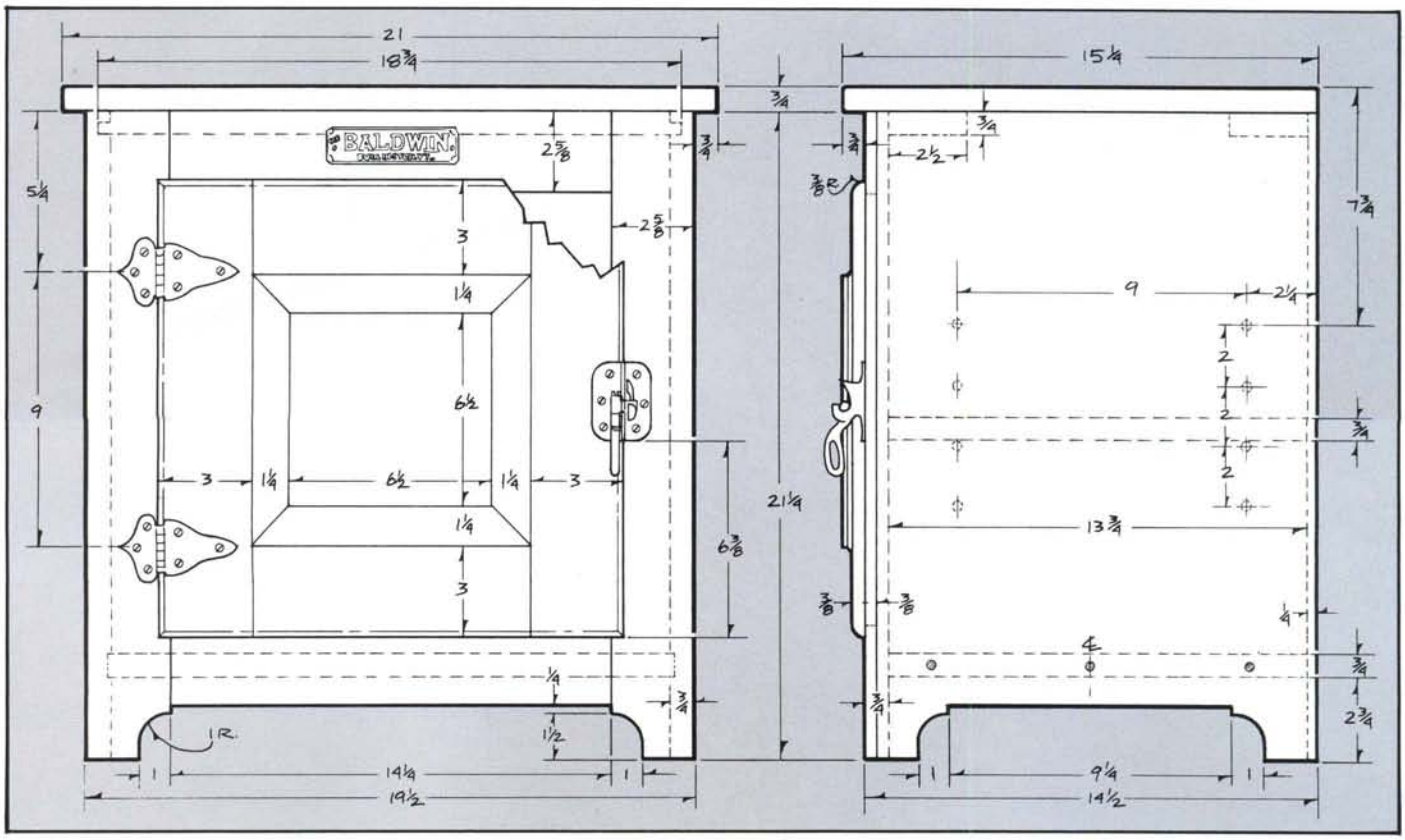

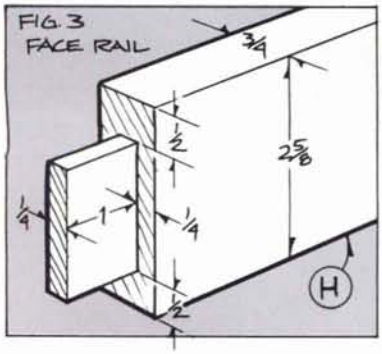

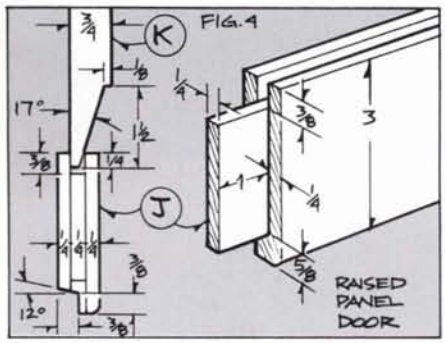

for variations in the hinge. The hinges should work with a 3/8 in. deep rabbet, but we needed to cut the rabbet a bit deeper for them to fit properly.

With the door and cabinet complete, you can move on to the finishing stage. We finished the ice chest with Minwax Jacobean stain, followed by two coats of orange shellac and two coats of Minwax Antique Oil Finish. Rub out the shellac and the oil finish with 0000 steel wool. Finally, attach the marbleized top and apply the hinges, nameplate (M) and latch (N).

Bill of Materials
(all dimensions actual)

Part	Description	Size	No. Req'd.
A	Top	3/4 × 15 1/4 × 21	1
B	Side	3/4 × 14 1/8 × 21 1/4	2
C	Spreader	3/4 × 2 1/2 × 18 3/4	2
D	Bottom	3/4 × 13 1/2 × 18 1/4	1
E	Shelf	3/4 × 13 1/2 × 17 7/8	1
F	Back	1/4 × 18 3/4 × 21 1/4	1
G	Face Stile	3/4 × 2 5/8 × 21 1/4	2
H	Face Rail	3/4 × 2 5/8 × 16 1/4	2
I	Door Stile	3/4 × 3 × 15	2
J	Door Rail	3/4 × 3 × 11	2
K	Panel	3/4 × 9 1/2 × 9 1/2	1
L	Hinge	3/8 offset as shown*	2
M	Nameplate	as shown*	1
N	Latch	as shown*	1

* Parts available from Constantine, 2050 Eastchester Road, Bronx, NY 10461; Tel. (212) 792-1600. The hinges (catalog no. IB1) are $5.45 each; the latch (IB3) is $6.25; the nameplate (IB7) is $2.75. Note when ordering the hardware that the latch specified is called a left hand latch because the door is hinged on the left side. If you want to hinge the door on the other side, the latch is catalog no. IB2. Prices do not include postage.

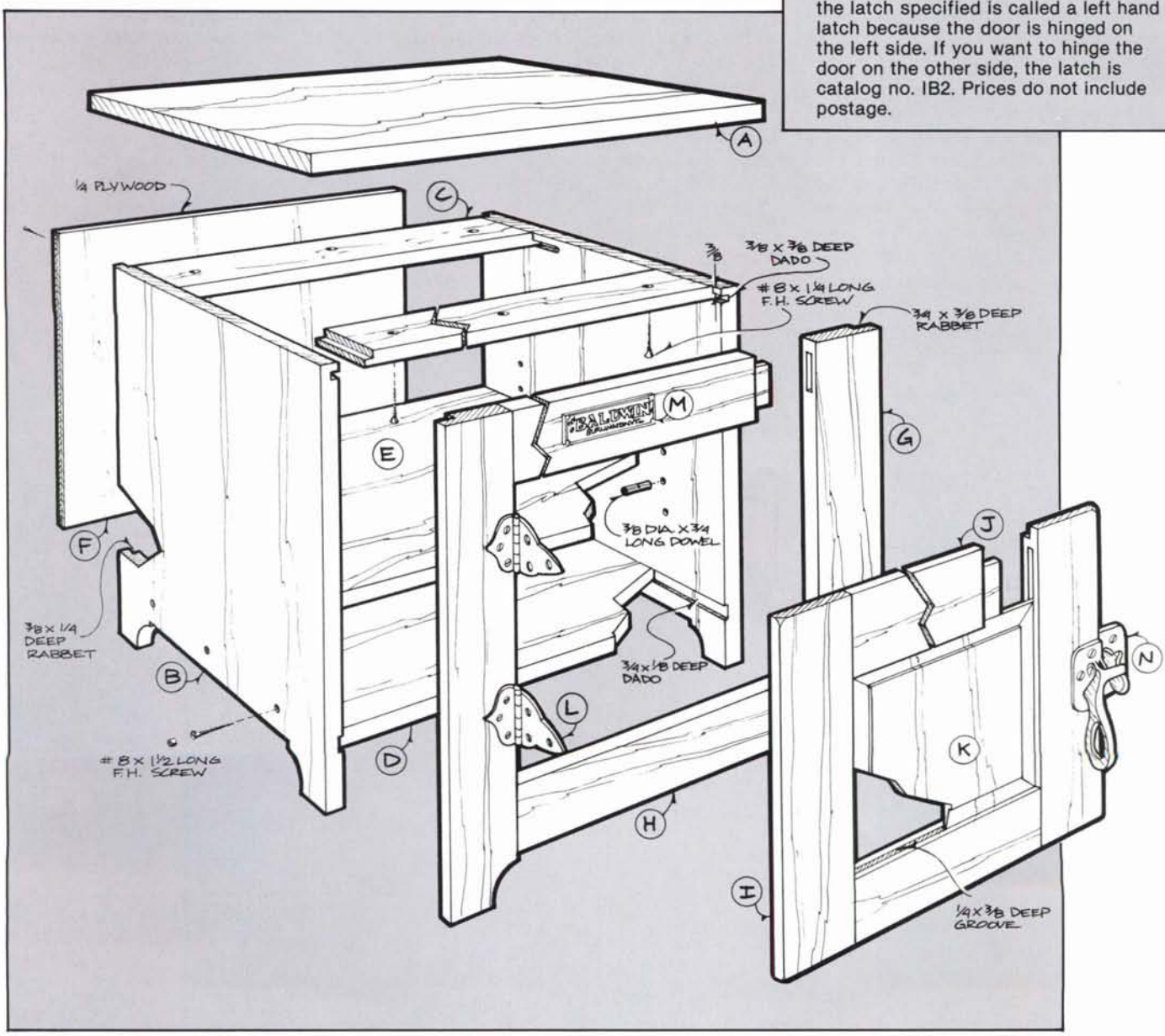

THE WOODWORKER'S MARKETPLACE

Rocking Dobbin Ranch
ADULT SIZED ROCKING HORSE PLANS

* Fun. Easy to follow plans.
* Step-by-step instructions.
* A great project for the entire family.
* Exciting for all ages.

Send $8.50 today and have your plans next week.
7172 Summitrose Street
Tujunga, CA 91042

THE ONLY "ORIGINAL" LATHE TOP WOOD TURNING DUPLICATORS SOLD WORLD WIDE. MAKES TURNING FASTE SAFE AND EASY. FOR USE BY CRAFTSMEN OR HOBBYISTS ALIKE WITH PROFESSIONAL RESULTS.

EST. 1948
TURN-O-CARVE TOOL
"Original Wood Turning Duplicators"

FREE Literature

TURN-O-CARVE TOOL CO., P.O. Box 8315-WJ
Tampa, Florida 33674

LAS VEGAS CASINO IN YOUR HOME

Make full size Blackjack, Craps, Roulette Tables. Complete Kits Available. Free Blackjack Card Count Guide. Details.

Casino Woodworking
Box 1686, Las Vegas, NV 89101

Build or Assemble Yourself For Fun and Fund Raising

FULL SIZE WOODCRAFT PATTERNS

SIMPLE TO MAKE ★ FUN ★ PROFITABLE

- ☐ 200 pattern packet for scroll, band & jigsaws
- ☐ "Country Critters"-100 patterns, unique projects
- ☐ 6 enjoyable "Wind-Action" whirligigs
- ☐ "Country Classics" - best selling country projects
- ☐ 100 yard ornaments, animals, birds and more
- ☐ 17 "Show Stoppers" - craft show best sellers

Send $7.00 per packet or 3 FOR ONLY $14.00.
Fast Service • Satisfaction Guaranteed!
ACCENTS Dept. MJ99, Box 7387, Gonic, NH 03867
Catalog of 1000 patterns $2.00 (Free with order)

Build "Merrilegs"

Full-size Plan #121 $12.95
(catalog free with order)
SEND TODAY!

CATALOG
200 full-size professional furniture plans — **$3.00**

FURNITURE DESIGNS, INC., Dept. JZ-99
1827 Elmdale Ave., Glenview, IL 60025 — (312) 657-7526

TOY WHEEL MAKER

WHEELRIGHT
WITH THE WHEELRIGHT AND YOUR DRILL PRESS YOU CAN MAKE 1 3/8" TO 4 1/2" TOY WHEELS.

ROSETTE TOOL
MAKE OLD STYLE ROSETTE TRIM BLOCKS WITH THE ROSETTE TOOL AND YOUR DRILL PRESS.

24 INCH SCROLL SAW KIT
YOU CAN EASILY BUILD YOUR OWN 24" PRECISION SCROLL SAW FROM OUR KIT. VERY AFFORDABLE!

PEDAL POWERED SCROLL SAW
REPRODUCTION OF THE 1870 BARNES VELOCIPEDE NO. 2 PEDAL SCROLL SAW. GREAT FOR SHOWS!
$1.00 FOR CATALOG WITH FREE TOY PLAN

THE TOOL COMPANY
PHONE 816-537-6308
5271 RAINTREE PARKWAY, DEPT. WJ99, LEE'S SUMMIT, MO 64082

The Japan Woodworker's Catalog is . . .

loaded with the best tools you can get your hands on. In our catalog you will find a hugh selection of Japanese saws, waterstones, chisels, planes, carving tools, cutlery and books. Send $1.50 for our catalog and supplements during the next two years.

THE JAPAN WOODWORKER
1731 Clement C1, Alameda, CA 94501
Phone 1-800-537-7820

Imported European Hardware

4320 W. Bell Drive
Las Vegas, NV 89118
871-0722
SEND $1.00 FOR CATALOG

MasterCard VISA

ANTIQUE reproduction furniture HARDWARE

HORTON BRASSES
Nooks Hill Rd PO Box 120WJ
Cromwell, Ct 06416 203-635-4400
send $3.00 for a catalog

Save on Band Saw Blades Scroll Saw Blades
Free Catalog from **OLSON®**
Save up to 50% on the Finest Quality Band and Scroll Saw Blades.

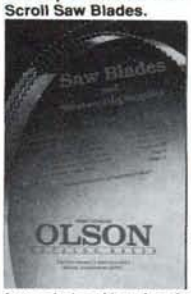

Band Saw Owners...
Hard edge, flex back for general purpose sawing; NEW furniture band for cutting wood faster and smoother; and special thin gauge blades for bench top and 3 wheel saws. Welded to the length you need or in 100' coils.

Scroll Saw Owners...
A huge selection of plain or pin end scroll saw blades; fret, spiral and jewelers (metal piercing) saw blades.

OLSON CATALOG SALES
Dept. WJ, Route 6
Bethel, CT 06801 (203) 792-8622

MASTER CASTERS!
Without our casters, furniture can be a real drag—drag it here; drag it there. So get on the move and choose your wheels from among our many sets of elegant period casters and related hardware. Our styles include both brass shank- and plate-type casters with either brass or porcelain wheels. We also stock brass ferrules (with/or without casters), brass clawfeet and toe sockets, and steel shank/wood wheel casters. Rely on our new 70-page catalog to help you with the toughest project. To get your copy of this indispensible reference, please send $4.00 to:

PAXTON HARDWARE LTD.
7818 Bradshaw Road, Dept. WJ10, Upper Falls, MD 21156
Quick Shipment Free Mini-Catalog

WOODWORKER'S CATALOG

There are over 4,000 money-saving reasons why woodworkers rely on Constantine.
4,000 woodwork items—to help you Build-Restore-Repair-Refinish! Over 200 different woods . . . 150 veneers . . . 500 plans . . . cabinet hardware . . . 96 How-To Books . . . 118 carving tools and chisels . . . 76 inlay designs . . . and lots more for One-Stop, Right-Price Shopping without leaving home!

CONSTANTINE Est. 1812
2044S Eastchester Road
Bronx, NY 10461

Send 116 page catalog $1.00 enclosed

Name_____
Address_____
City_____ State_____ Zip_____

THE WOODWORKER'S MARKETPLACE

HOMECRAFT VENEER

DOMESTIC AND IMPORTED VENEERS

Over 140 varieties of Veneers. Complete Line of Tools for Veneering, Laminating and Marquetry.—Cements and Glues. Simplified Veneering Instructions and price list sent for $1.00. HOMECRAFT VENEER 901 West Way; Latrobe, Pa. 15650

WOOD PARTS

TOY, FURNITURE, CRAFT & GAME

Wheels • Spindles • Balls • Knobs • Shaker pegs • And more!

Since 1927! Send $1.00 for Catalog.

BROWN WOOD PRODUCTS CO.

P.O. Box 8246WJ, Northfield, IL 60093 • (312) 446-5200

Everybody talks about the weather. Now you can do something about it.

Global temperatures are rising. 1988 was one of the warmest years on record. Instead of talking about it, you can help by planting trees. To find out more, write Global ReLeaf, American Forestry Association, P.O. Box 2000, Dept. GR2, Washington, DC 20013.

GLOBAL RELEAF

You can make a world of difference.

TABLE STROKE SANDER

6 Models $595.00 — $695.00 *BALL*
Deluxe $750.00 — $1200.00 *BEARING*

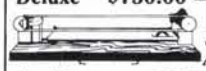

Sand 38" x 6' & 8'
Sidestroke & String Sanders Available, Kits $45 to $570.

(Less Motor) F.O.B.

® McCall House, Box 1945-C
Lenoir, N.C. 28645 (704) 758-1991

Furniture Refinishing

Earn $500 - $1000 in a single day!

Part-time, full-time opportunity. **FREE** catalog stripping, repairing, refinishing, mirror resilvering, veneering supplies & systems. Complete training provided.

Send $1 for postage & handling to:

MINUTEMAN, INC., Dept. 06

115 N. Monroe St., Waterloo, WI 53594

CLASSIFIED

The Classified Rate is $1.50 per word, payable with order. Minimum ad length is 15 words, and the deadline date is the 25th of the 3rd month preceeding the issue (10/25 for the January/February issue). Send copy (count each word and initial) and check to ***The Woodworker's Journal,*** *Classified Dept., P.O. Box 1629, New Milford, CT 06776*

Full-size wooden toy patterns, unique new designs, fast service. Catalog $1.00 refundable. Yesteryear Toy Shop, RD 1, Knox, PA 16232.

Patterns/Instructions (wood cutouts) — "Santa-with-List"; "Sleigh"; "Snowman"; "Candy Cane"; "Carolers"; "Stag"; "Doe"; "Fawn" — $3.50 each pattern. Catalog $1.00. Fourth Dimension (WW99), 85 Helmar Drive, Spencerport, NY 14559.

Adult Size Rocking Horse Plans. Fun, easy. $8.50. Rocking Dobbin Ranch, 7172 Summitrose St., Tujunga, CA 91042.

Post Office Box Bronze Doors — No. 1 and No. 2: 4 for $21.00; No. 3: $8.00. Postpaid. Clayton, 1500 Huntcliff Way, Clinton, MS 39056. (601) 924-4307.

Video — Well constructed joints lead to outstanding finished projects. "The Perfect Connection" is a two-part "how-to" series on basic joints: miter, dado, dovetail, box, mortise and tenon. Part I demonstrates making these joints using hand tools & circular saw. Part II uses the router, table saw & radial arm saw to make these joints. Each tape approximately 60 minutes. Improve your skills — Improve your projects! Order "The Perfect Connection" from: Wood 'N Things, P.O. Box 20237, Sun Valley, NV 89433-0237. Send check or money order: $32.95/tape or $60.00 for both. Nevada residents add 6% sales tax.

Queen Anne table legs, pedestals, feet, and finials in walnut, cherry, and mahogany. Write: Southern Country, Box 6, Sharpsburg, NC 27878 for brochure.

100 Full Size Woodcraft Patterns: Windmills, Bird Houses, Toys, etc. $4.50. Catalog alone 50¢. Hayes Patterns, 6F Willow St., Woburn, MA 01801.

"Good Wood" Pennsylvania Hardwoods. Over 2000 sizes, 12 species. ⅛" to 2" thick. Surfaced, kiln dried. Small orders welcome. Free catalogue: Croffwood Mills, RD #1 Box 14J, Driftwood, PA 15832.

Use Your Scrap Wood. Make Shaker furniture miniatures. Book shows how. Free details/sample plan, RAI, (WJ9), Box 586, Alpharetta, GA 30239-0586.

Let The Government Finance your woodworking-related small business. Grants/loans to $500,000 yearly. Free recorded message: (707) 449-8600. (KX9)

Nativity Scene — ⅓ life size — Create eleven plywood figures and manger. Full size patterns plus woodcraft catalog $14.00. Accents, (NJ-99), Box 7387, Gonic, NH 03867.

Door Harp Hardware — 50 tuning pins $15.00; 250 pins $52.50; 500 pins $80.00; 1000 pins $120.00. ¼ lb. No. 2 wire $8.00. Tuning pin wrench $5.00. All prices postpaid within the continental USA. Folkcraft Instruments, Box 807P, Winsted, CT 06098. (203) 379-9857.

Router Bits made in the USA! New 1989 Eagle America mail-order catalog. Over 700 items available. High quality bits at factory direct prices. Send $3.00 (and get $5.00 off first purchase) to Eagle America, P.O. Box 1099, Dept. WJ2, Chardon, OH 44024. "Come back to American made quality . . . Come back to Eagle."

CLASSIFIED

Stainless Steel and Brass Screws and Bolts. Small quantities, free catalog. Elwick, Dept. 747, 230 Woods Lane, Somerdale, NJ 08083.

Custom Turning — Have turnings made to your exact specifications. Furniture reproductions, porch railings, and stairway balusters a specialty. For free brochure send to: River Bend Turnings, Box 364 Dept. WJ, RD #1, River Road, Wellsville, NY 14895.

Picture Frame Molding 25¢ per linear foot, FOB Pensacola, Florida. C. Stander, 932 Springmeier Place, Pensacola, FL 32514; (904) 968-6424.

Lockbit Keyless Chuck for cordless tools. Only $8.00. Spors Company, 3031 Iroquois (W), Detroit, MI 48214.

Dovetail Router Jig: 24″ through 18″ half blind. Plans $8.50 or send $1.00 for info to: Mark Tobias, Box 124(WJ), New Holland, IL 62671.

Dulcimer Builder Supplies, Precision milled and fine sanded dulcimer and hammered dulcimer woods. Cherry, walnut, paduk, rosewood, birdseye, and curly maple, Sitka spruce, W.R. cedar; related hardware, strings and accessories. 65¢ stamp for brochure. Folkcraft Instruments, Box 807-W, Winsted, CT 06098; (203) 379-9857.

Craft Supplies: Clock movements, components, plans, epoxy, foil and art prints, Shaker pegs, touch tones, door harp supplies, Bible clocks, videos, transfer art, stencils — over 1200 items! Wholesale catalog $3.00 (credited). Steebar, P.O. Box 463-E, Andover, NJ 07821-0463.

Hardwood Lumber, kiln dried, large variety of species in several thicknesses and grades. We also carry basswood carving stock, spalted blocks, curly and wormy maple, steam bending woods, flooring paneling, and finishing supplies. No minimum order, size selection available. Call or send stamp for listing. Garreson Lumber, Dept. B, RD 3, Bath, NY 14810; (607) 566-8558.

Musical Instrument Kits — dulcimers, hammered dulcimers, banjos, mandolins, and more. Color brochure 56¢ stamp. Folkcraft Instruments, Box 807-K, Winsted, CT 06098. (203) 379-9857.

Woodentoy — patterns, project books, hardwood wheels, pegs, cargo, people and more. Send $1.00 for catalog; $4.00 for catalog plus 2 patterns; or free brochure. Woodentoy, Box 40344-WWJ, Grand Junction, CO 81504.

Real Scroll Saw Patterns — Not For Bandsaws. Seven turn-of-century antique cars — Chevy, Ford, Buick, etc. — for gifts or profit. Best-sellers in our shop. Unique, very detailed. $7.00. Memory Lane, 5367-C East Mountain St. (WJ), Stone Mountain, GA 30083.

Blueprints . . . 82 Classic Barns, Minibarns, Craftshops, Garages . . . Inexpensive! Catalog $5.00 (refundable). Ashland Barns, 990WJ Butlercreek, Ashland, OR 97520.

Dinosaur Patterns. 6 full size patterns for wooden jointed dinosaurs. Great profit or gift idea. Send $6.75 for "dinosaurs" to Dakota Wind, Box 866WJ, Jamestown, ND 58402.

Fine Woodworking Program. One year course in furniture and cabinet making, design and drafting, turning, carving, tool use, finishing, and more. Nationally Accredited. Financial aid available. Free brochure. Roberto-Venn School of Luthiery, 4011 S. 16th St., Phoenix, AZ 85040; (602) 243-1179.

Waving Santa! Five foot tall plywood Santa adds holiday welcome to home/yard. Full size patterns plus woodcraft catalog $7.00. Accents, (KJ-99), Box 7387, Gonic, NH 03867.

Informative Catalog for Woodworkers, woodcarvers, upholstery, antique restorers. Many unusual, hard-to-find items. Send $1.00 to Van Dyke's, Dept. 83, Woonsocket, SD 57385.

Victorian Screen Door Kits. Build your own heirloom screen door. Many designs, all sizes. Catalogue $2.00, refundable. G.E.R., P.O. Box 1026W, Lapeer, MI 48446. (313) 664-1756.

Craftsmen — Show pride in your fine work. Personalize your pieces with engraved brass plates. Send $1.00 for sample plate — Handcrafted by — your name. V-B, 807 East Dana St., Mountain View, CA 94041.

Bookcases, Entertainment Centers, Waterbeds, Bedroom and Children's Furniture, etc. Catalog $3.75. Kraemer Furniture Designs, 1350 Main St., Plain, WI 53577.

Post Office Box Bronze Doors No. 1 & No. 2 $5.00 each, No. 3 $9.00. Add $1.00 each shipping. SASE: Hubbert Woodcrafts, P.O. Box 1415, Fletcher, NC 28732. (704) 687-0350.

300+ Plans — Build shop machines and accessories. Catalog $1.00 refundable. Wood-Met (WJ), 3314 Shoff, Peoria, IL 61604.

Make Wooden Toys, whirligigs, doll houses, clocks, music boxes, weather instruments, crafts, furniture with our plans, parts, kits, books, supplies — Catalog $1.00 — (614) 484-4363 — Cherry Tree Toys, Belmont, OH 43718-0369.

Select + Better: Walnut $3.22 bf; Cherry $2.07 bf; Hard Maple $1.52; Additional Species — Catalog $1.00 Visa/Mastercard; Badger Hardwoods, Rt. 1 Box 262, Walworth, WI 53184.

Spray-On Suede Lining. Finish any project with a soft touch. Free brochure, sample enclosed. DonJer Products, Ilene Court — Bldg. 8R, Bellemead, NJ 08502. (800) 336-6537.

Chair Caning Supplies — cane webbing, rush, splint, ash, rawhide, cord. Catalog $1.00 (refundable). Caning Shop (WJ), 926 Gilman, Berkeley, CA 94710.

BACK ISSUES

Back issues are $3.50 each postpaid ($4.50 Canadian funds).
To order use the form bound in the center of this issue.

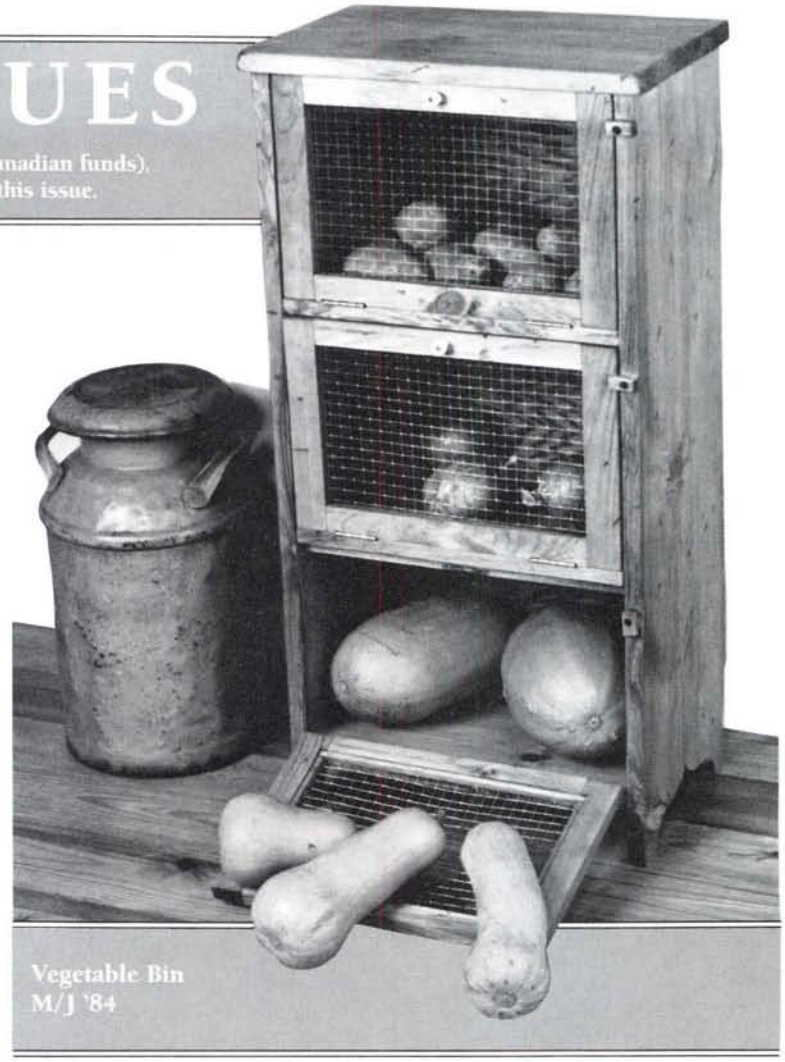

Vegetable Bin
M/J '84

Vol. 8 No. 3 May-June '84

Country Vegetable Bin, Folding Deck Chair, Shaker Pedestal Table, Wall Hung Display Cabinets, Wooden Coat Hanger, Toy Car and Trailer, Paper Towel Holder, Carved Hand-Mirror, Writing Desk, Carved Walking Stick, Laminated Clock, Oak and Glass End Table, *Articles:* How to Lay Out and Make Circular Cuts; Mail Order Selling; Stripping Old Finishes; Carving the Ball-and-Claw Foot.

Vol. 8 No. 4 July-Aug '84

Wag-on-Wall Clock, Oak Swing, Candy Dispenser, Coffee and End Tables, Tugboat and Barge, Lazy Susan, Early American Mirror, Colonial Pipe Box, Sewing Machine Cabinet, Cam Clamp, Hamper, *Articles:* What Sells Best?; Homemade Removers; Buying a Basic Set of Hand Tools; Kerf Bending; Suppliers of Caning & Wood Finishing Products.

Vol. 8 No. 5 Sept-Oct '84

Not Available

Vol. 8 No. 6 Nov-Dec '84

Stickley Chair, Tool Cabinet, Shaker Sewing Stand, Lighted Display Pedestal, Teardrop Clock, Pierced Tin Cabinet, Toy Hook and Ladder Fire Truck, Busy Bee Toy, Colonial Doll House, Kitchen Organizer, Wine Server, Grandfather Clock: Part II, *Articles:* Starting a Business: Part II; Applying the Final Finish; The Fundamentals of Wood; Inlays and Inserts; Gustav Stickley and American Mission Furniture.

Vol. 9 No. 1 Jan-Feb '85

Early American Step Table, Oak Barrister's Bookcase, Parquet Table, Shaker Trestle Table, Bandsawn Wooden Scoops, Toy Biplane, Book Ends, Contemporary Candle Holders, Necktie and Belt Holder, Keyed Miter Jig, Modular Coffee Table and Bar, Magazine and Book Rack, Contemporary Chest of Drawers, *Articles:* Toys and Children's Articles: An Outline of The Consumer Product Safety Commission Standards; Shellac; Truing and Squaring Lumber; The Fingerjoint Spline; Suppliers of Furniture Kits; The Shakers; *Special Section:* Back Issue Index.

Vol. 9 No. 2 Mar-Apr '85

Queen Anne Lowboy, Television/VCR Stand, Early American Pine Corner Cupboard, Toy Tool Set, Windspinner, Woodchopper Whirligig, Chinese Puzzle, Cut-off Jig, Blanket Chest, Shaker Harvest Table, Blacksmith's Tool Tray, *Articles:* A Guide to Photographing Your Work; Applying Shellac and Lacquer; Sharpening Plane Blades and Chisels; Installing Machine Woven Cane; American Queen Anne, 1715-1755; General Woodworking Suppliers.

Vol. 9 No. 3 May-June '85

Jacobean Joint Stool, Wall Cabinet with Recessed Finger Pulls, Shaker Desk, Kitchen Cart, Contemporary Wall Clock, Colonial Wall Sconce, Card Box, Towel Bar with Glass Shelf, Marble Race Toy, Cradle, Vanity Mirror, Miter Clamping Jig, *Articles:* Product Liability: Part I; Restoring an Antique Mirror Frame; Coping with Wood Movement; Making Recessed Finger Pulls; The Jacobean Period.

Vol. 9 No. 4 July-Aug '85

Gate-Leg Table, Computer Desk, Shaving Horse, Stamp Dispenser, Crumb Collecting Breadboard, Toy Trucks, Early American Wall Shelf, Pivot-Top Game/Coffee Table, Settle Bench, Shaker Single-Drawer Cupboard, Fold-up Workbench, *Articles:* Product Liability: Part II; Caning and Wood Finishing Supplies; Spray Finishing; Table Saw Basics; Making the Rule Joint; The William and Mary Period.

Vol. 9 No. 5 Sept-Oct '85

Colonial Schoolmaster's Desk, Contemporary Sideboard, Mahogany End Table, Victorian Hall Tree, Cutlery Wall Cabinet, Swing-out Plant Hanger, Prancing Horse Silhouette, Block Puzzle, Iron Caddy, Toy Ironing Board, Early American Water Bench, Wooden Smooth Plane, Shaker Sewing Box, *Articles:* A Craft Fair Visit; How to Use Stick Shellac; A Guide to Circular Saw Blades; Making Bent Laminations; Country Colonial Furniture.

Vol. 9 No. 6 Nov-Dec '85

Moravian Chair, Dulcimer, Oak Dining Table, Shaker Washstand, Marking Gauge, Veneered Wall Clock, 4 x 4 Off-Roader, Teddy Bear Puzzle, Duck Pull-toy, Landscape Cutting Boards, Early American Tall Clock, Pine Desk Organizer, *Articles:* Secrets of Success; Weaving a Fiber Rush Seat, Part I; Table Saw Ripping Problems and Their Solutions; 4-Piece Book Match Veneering; Pennsylvania Dutch Furniture.

Vol. 10 No. 1 Jan-Feb '86

Freestanding Shelf System, Chippendale Bachelor's Chest, Oriental Serving Tray, Country Bench, Antique Knife Tray, Tape Dispenser, Valentine Box, Toy Tow Truck & Car, Shaker Drop-leaf Table, Shop-made Bow Saw, Child's Settle Bench, Plate Shelves, *Articles:* On Getting Paid for Your Work; Weaving a Fiber Rush Seat, Part II; Table Saw Crosscutting: Techniques & Tips; Router-Lathe Fluting: A Shop-made Approach; Chippendale Furniture; *Special Section:* Back Issue Index.

Vol. 10 No. 2 Mar-Apr '86

Not Available

Vol. 10 No. 3 May-June '86

Victorian Whatnot Shelf, Contemporary Lamp, Early American Bench, Steam-bent Clock, Pine Hutch/Cupboard, Canada Goose Basket, Toy Crane, Condiment Holder, Shop Workstation, Parsons Table, Shaker Lap Desk, *Articles:* An Interview with Toymaker Clare Maginley; How to Flatten a Warped Board; A Guide for Choosing Your First Router; Supported Steam Bending; Victorian Period.

Vol. 10 No. 4 July-Aug '86

Shaker Slat-Back Side Chair, Wall-Hung Display Cabinet, Latticework Planter, Country Bucket Bench, Adirondack Chair, Coffee Mill, Clamdigger's Basket, Box of Shapes Toy, Disk Clock, Tenon Jig, Dictionary Stand, *Articles:* Selecting the Right Project for Production; More About Warped Boards; All About Router Bits; The Sliding Dovetail Joint; Furniture Kits Suppliers.

Vol. 10 No. 5 Sept-Oct '86

Desk with Tambour Top, Vanity Case, Stool, Coffee Table, Blanket Chest, Mortar and Pestle, Whale Folk Art Silhouette, Toy Wagon, Cran-

berry Rake, Router Bit Box, Shaker Drop-leaf Table, *Articles:* Are Your Prices Competitive?; Restoring a Rosewood Chair; Basic Router Operations; Making Tambour Doors; General Woodworking Suppliers.

Vol. 10 No. 6 Nov-Dec '86

Early American Hamper, Cube Table, Rabbit Pull Toy, Old-Time Sled Wall Shelf, Cassette Tape Holder, Dog/Cat Bed, Vanity Mirror, Early American Washstand, Router Table, Victorian Sleigh, *Articles:* Wholesale and Discount Sources of Supply; Sandpaper Abrasives; Using the Router Table; The Mitered Bead Frame and Panel; Clock Parts Suppliers.

Vol. 11 No. 1 Jan-Feb '87

Shaker Blanket Chest, Glass-Top Dining Table, Dovetailed Stool, Jewelry Box, Door Harp, Toy Firetruck, Canada Goose Mobile, Balancing Sawyer Folk Toy, Early American Style End Table, Jointer Push Board, *Articles:* Direct Mail Promotions — Defining the Market for Your Work; Old Wood; The Mortise and Tenon, Part I; Combination Hand/Router Dovetailing; *Special Section:* Back Issue Index.

Vol. 11 No. 2 Mar-Apr '87

Shaker Sewing Desk, Garden Bench and Table, Mirrored Wall Shelf, Rhombohedron Puzzle, Wood Sawyer Whirligig, Folk Art Door Stop, Kangaroo Pull Toy, Colonial Pine Wall Shelf, Contemporary Hall Table, *Articles:* How to Create a Direct Mail Promotion; Types of Finish — An Overview; The Mortise and Tenon, Part II; Making Bevel-Edged Drawer Bottoms.

Vol. 11 No. 3 May-June '87

Display Pedestal, Kitchen Canister Set, Riding Biplane, Contemporary Serving Cart, Napkin Holder, Decorative Planter, Country Vegetable Bin, Pine Medicine Cabinet, Shop Drum Sander, Vienna Regulator Clock, *Articles:* Penetrating Oils and How to Use Them; The Jointer; Veneer, Part I; Decorative Joinery: Dovetail Key Butt-Miter; Caning and Wood Finishing Suppliers.

Vol. 11 No. 4 July-Aug '87

TV/VCR Cabinet, Early American Style Bookcase, Pine Trash Container, Sturdy Low-cost Workbench, Country Basket, Desk Calendar with Pen & Pencil, Butterfly Pull Toy, Vanity Mirror with Drawer, Apothecary Chest, *Articles:* Shellac; The Hand Plane; Veneer, Part II; Incised Carving; Hardwoods Suppliers.

Vol. 11 No. 5 Sept-Oct '87

Pine Woodbox, Contemporary Love Seat, Two-Drawer Oak Platform Bed, Snail Pull Toy, Routed Trivets, Spice Rack with Chip Carving, Joiner's Tool Chest, Shaker-style Step Stool, Turned Shop Mallets, *Articles:* French Polishing Made Easy; Plane Iron Sharpening; Making a Splayed Leg Drill Guideblock; Traditional Chip Carving; Shop-Tested: 12 Jigsaws.

Vol. 11 No. 6 Nov-Dec '87

Curio Cabinet, Rocking Horse, Three-drawer Jewelry Chest, Tapering Jig, Rolling Toy, Folk Art Silhouette, Two Towel Racks, Early American Style Wall Shelf, Corner Cupboard, Stacking Wine Racks, *Articles:* On Glues and Gluing; Band Saw Setup; Making the Continuous Bracket Foot; Step-By-Step To A Flawless Finish On Pine (Or Any Other Wood); Hardware Suppliers.

Vol. 12 No. 1 Jan-Feb '88

Early American Pierced Tin Cabinet, Contemporary Coffee Table, Puss 'n Books Bookends, Cookbook Holder, Wooden Jewelry, Child's Duck Puzzle, Shaker Wall Clock, Stereo Cabinet and Speakers, Country Occasional Table, Drill Press Jig, *Articles:* Edge-gluing; The Drill Press; Pierced Tin; Four Shopmade Finishes; General Woodworking Suppliers.

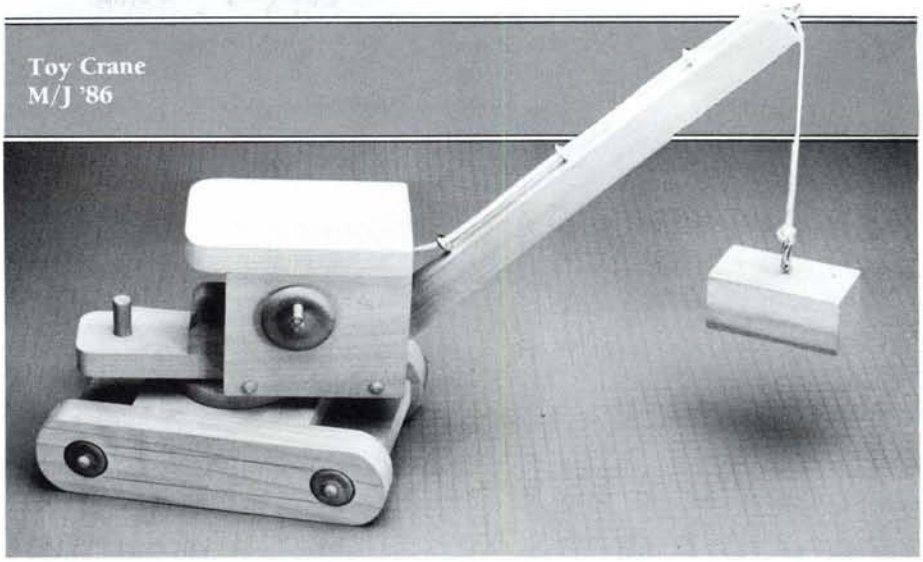

Toy Crane
M/J '86

Vol. 12 No. 2 Mar-Apr '88

Folk Harp, Oak & Glass Tier Table, Crystal Regulator Clock, Early American Candlesticks, Arrow Wall Decoration, Three-Drawer Country Wall Box, Key Cabinet, Contemporary Box, Shaker Carrier, *Articles:* Use and Sharpening of the Hand Scraper; The Lathe: Basic Setup; Quartered Turnings; Lacquer; Stationary Tool Suppliers.

Vol. 12 No. 3 May-June '88

Hunt Table, Loon Carving, Early American Dry Sink, Contemporary Dresser, Old-Time Pipe Box, Antique Knife & Fork Tray, Dutch Tulip Folk-Art Silhouette, Colonial Salt Box, Bud Vase, Miter Gauge Stop, *Articles:* Spindle Turning; Selecting and Sharpening Lathe Tools; Recessed Finger Pull Step-By-Step; Types of Stain; Clock Parts Suppliers.

Vol. 12 No. 4 July-Aug '88

Four-Drawer Lamp, Oak Magazine Rack, Occasional Table, Mitered-Corner Box, Heart Stool, Decorative Cutting Boards, Kids' Piggy Bank, Turned Bowl, Country Cupboard, *Articles:* Faceplate Turning; Workshop Layout; Cutting Dovetails on the Table Saw; Staining Basics; Schools and Craft Centers.

Wag-on-Wall Clock
J/A '84

Vol. 12 No. 5 Sept-Oct '88

Oak Bookcase Desk, Miter Cutting Jig, Captain's Clock, Country Coffee Table, Rooster Folk-Art Silhouette, Harvest Basket, Bird Push Toy, Pencil Post Nightstand, 18th-Century Pencil Post Bed, *Articles:* Why Worry About Wood Movement?; Joining Ring Segments; Drill Bits and Boring: The Hole Story; Filling Open-Grained Woods; Hardwood Suppliers.

Vol. 12 No. 6 Nov-Dec '88

Child's Carousel Lamp, Shaker High Chest, Table Saw Crosscut Box, Country Vegetable Bin, Whale Pull Toy, Colonial Wall Sconce, Treetop Christmas Oranament, Classic Pickup Truck, Contemporary Cradle, *Articles:* Flattening Wide Surfaces with the Hand Plane; Making a Cove-Edged Raised Panel: Core-Box Bit Method; Polyurethane; A Sander For Large Surfaces; Caning and Wood Finishing Suppliers.

Vol. 13 No. 1 Jan-Feb '89

Shaker Wall Cabinet, Shop-Built Disk Sander, Cherry Table, Pine Wall Clock, Rock and Roll Toy, Contemporary Candlesticks, Merganser Decoy, Child's Table and Chairs, *Articles:* Buying Hardwood Lumber: What You Need to Know; The Thickness Planer; Making Breadboard Ends; Ebonizing; Hardware Suppliers; *Special Section:* Back Issue Index.

Vol. 13 No. 2 Mar-Apr '89

Oriental Mirror, Adirondack Settee, Country Village, 18th-Century Tilt-Top Table, Toy Fishing Trawler, Two Trivets, Folk-Art Cow, Greek Revival Birdhouse, Pine Armoire, *Articles:* Transferring and Enlarging Patterns; Making Tripod Legs; Three Easy Finishes for Pine; The Portable Circular Saw; Schools and Craft Centers.

Vol. 13 No. 3 May-June '89

Jewelry Chest, Storage Seats, Table Saw Gauge, Oval Extension Table, Nessie Pull Toy, Back Massager, Decorative Wall Key, Country Wall Shelf, Contemporary Mirror, *Articles:* Panel Retainer Disk System; Understanding Circular Saw Blades; Cutting Box Joints; Non-Toxic Finishes; Massachusetts Woodworker Paula Garbarino; General Woodworking Suppliers.

Vol. 13 No. 4 July-Aug '89

Country Pie Safe, Shaker Long Bench, Folk-Art Sign, Toy Farm Tractor and Wagon, Miniature Flower Cart, Kitchen Tongs, Pine Wall Cabinet with Tinsel Art, Stacking Bookshelves, *Articles:* Dealing with Uneven Wood; Tinsel Art; Coping with Your Radial-Arm Saw; Brushing Lacquer; Tools on Display: A Visit to a Woodworking Show; Stationary Equipment Suppliers.

Shop Tips

Here's a handy way to lay out evenly spaced pins on a dovetail joint. Cut a length of stiff cardboard at least as long as the width of the piece to be dovetailed. Then lay out the number of pins that you want, with equal spacing between them. By holding the cardboard on a diagonal across the width of the stock, you'll be able to mark the

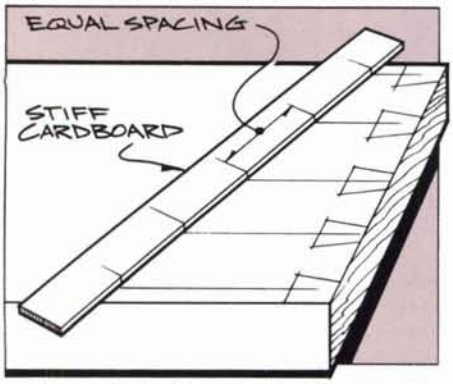

center point of each pin. Just make sure that your pin spacing on the cardboard is equal to or greater than the desired distance between the pin centers. You can also substitute a ruler for the cardboard.

It always seems such a waste to throw away belt sander belts that have torn. Usually there is plenty of good sanding left in them even though they can't be used on the belt sander. I rip them into narrow (about 1 in. wide) strips and use them to sand chair legs, dowel stock, round edges, or odd shaped pieces. They work much better than regular sandpaper, which does not stand up very well when continually flexed.

Craig A. Otterness
Spring Grove, Minn.

A wooden turnbutton makes a simple yet effective way to keep cabinet doors closed. When making the turn-

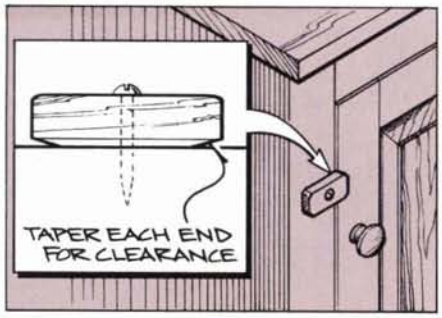

button, it's a good idea to file or sand a slight taper on each end. You'll find the taper helps the turnbutton to smoothly clear the door edge.

When belt sanding a wide board, it's often difficult to tell if you are removing material evenly from the entire surface. Many woodworkers find it helpful to first mark the surface with chalk or crayon as shown. The board is

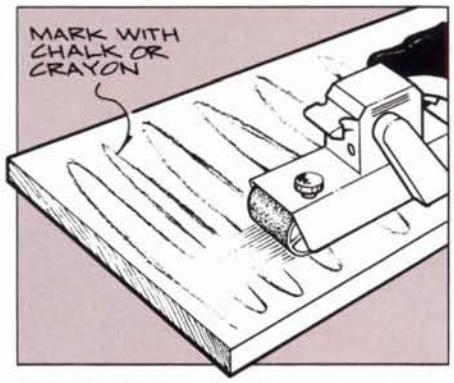

then sanded until all the marks are gone. Don't oversand, though. Sand only until the marks in an area are removed, then move on to a new area.

Many woodworkers like to use the router in conjunction with a router table. However, since it requires two wrenches (and two hands) to tighten the collet on most routers, the bit will often slip too far down into the collet while both hands are busy. Thank-

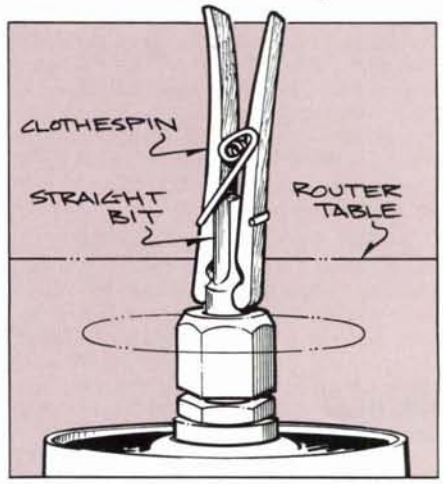

fully, there is an easy solution — a clothespin to hold the bit in place while tightening the collet. Just be sure to remove the clothespin before starting the router.

*The Woodworker's Journal pays $25 for reader-submitted shop tips that are published. Send your ideas (including sketch if necessary) to: **The Woodworker's Journal,** P.O. Box 1629, New Milford, CT 06776, Attention: Shop Tip Editor. We redraw all sketches so they need only be clear and complete. If you would like the material returned, please include a self-addressed stamped envelope.*

INDEX TO ADVERTISERS

Accents	61	Furniture Designs	61	McFeely's Hardwoods	34	Sakura U.S.A.	15
Accuset Tool Co.	5	Global ReLeaf	62	Meisel Hardware Specialties	8	Satinwood Products	5
Brookfield Craft Center	10	Grizzly Imports	9	Minuteman, Inc.	62	The Tool Company	61
Brown Wood Products	62	Homecraft Veneer	62	MLCS	11, 16	Tools of the Trade	12
Cascade Precision Tools	14	Horton Brasses	61	New Hampshire Woodworkers	9	Trend-Lines	2
Casino Woodworking	61	Imported European Hardware	61	Nova Tool Co.	10	Turn-O-Carve Tool Co.	61
Constantine	61	The Japan Woodworker	61	Olson Catalog Sales	61	U.S. Saw	10, 11
Dollar Trading Corp.	5	Jesse Jones Industries	34	Paxton Hardware	61	The Winfield Collection	13
Eagle America	15	Leichtung	25	Penn State Industries	22	Woodcraft Supply	5
Econ Abrasives	6	Lignomat	10	Pootatuck Corp.	15	Woodmaster Tools	25
Fisher Hill Products	6	Madrigal Publishing	10	Rocking Dobbin Ranch	61	The Woodworking Shows	13
Floral Glass & Mirror	10	McCall House	62	Roga Enterprises	7		
Foley-Belsaw	15						

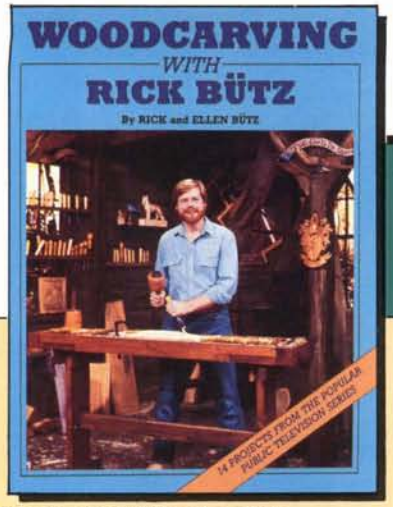

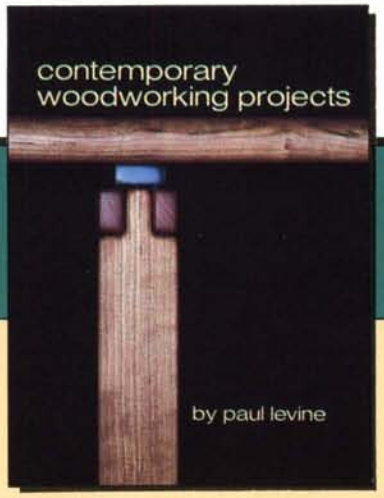

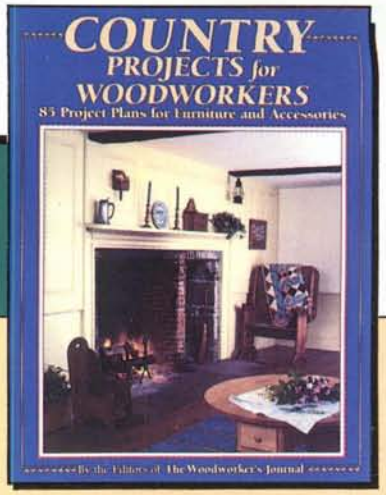

Woodcarving With Rick Bütz

Learn woodcarving! With just a few tools and a few hours to spare, you can share in the simple pleasures of carving. Wander into the Black Forest of Germany with a traditional carving of St. Nick, or into a small Russian village with a Dancing Bears folk toy. You'll enjoy a chip-carved Quilt Rack, wildlife carvings, and a Tobacconist's Indian. All 14 projects are fully detailed with step-by-step photos. There are also chapters on tool selection, sharpening, whittling, chip and relief carving.

Contemporary Woodworking Projects

Paul Levine guides woodworkers of all skill levels through room-by-room chapters of coordinated furniture and accessories. The clean angles, sturdy joinery and special techniques are made easy to master with step-by-step instructions and illustrations. Among the 40 handsome projects are a matching Love Seat, Chair and Ottoman set, an Oak Credenza, a Platform Bed, and a Japanese Shoji Lamp. Children will enjoy their own table and chair set, puzzles and a great box of dominoes.

Country Projects For Woodworkers

If building the simple, sturdy furniture of the old cabinetmakers appeals to you, then you'll want this collection of the best country projects from the 1980-84 issues of *The Woodworker's Journal*. 85 complete plans range from weekend projects like Colonial Candlesticks and Fireplace Bellows to more challenging projects such as a Shaker Chest of Drawers, a Stepped-Back Hutch, and an 18th Century Trestle Table. Some plans are also found in *Projects for Woodworkers*, Volumes 1 and 2.

BOOKS FROM The Woodworker's Journal

You'll find the handy order form for these books bound in the center of this issue.

101 Projects For Woodworkers

For the eager amateur just starting out or the craftsman with a shop full of tools, **101 Projects For Woodworkers** features an unparalleled variety of classic projects for everyone. Included in this collection of plans from the 1977-80 issues of *The Woodworker's Journal* are a classic Rolltop Desk, an old-fashioned Porch Swing, traditional and contemporary furniture, clocks, mirrors, home accessories, toys and novelties. Complete instructions and illustrations.

Projects For Woodworkers, Volume 1

Beginning and advanced woodworkers alike will appreciate the full range of styles in furniture, accessories, lamps, clocks, toys and gifts. Of the 75 projects selected from the 1980-81 issues of *The Woodworker's Journal*, plans include a Cabinetmaker's Workbench, Pine Shaker Cupboard, Old-time Icebox, a Cobbler's Bench Coffee Table and a Child's Victorian Sled. Fully detailed instructions, illustrations, and photos.

Projects For Woodworkers, Volume 2

Originally published in the 1982 issues of *The Woodworker's Journal*, all 60 projects were chosen with a wide variety of styles and skill levels in mind. Each project is presented with complete instructions and thorough illustrations. You'll find household accessories like the Desk Caddy, Casserole Dish Holder, and Breakfast Tray easy to build. And you're sure to enjoy the reward of completing more involved projects like the Tambour Desk, Old Danish Chest of Drawers and Swinging Cradle.

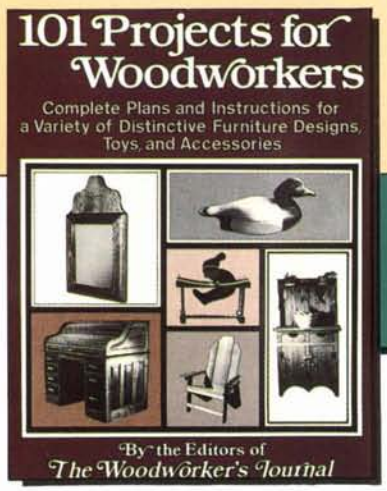

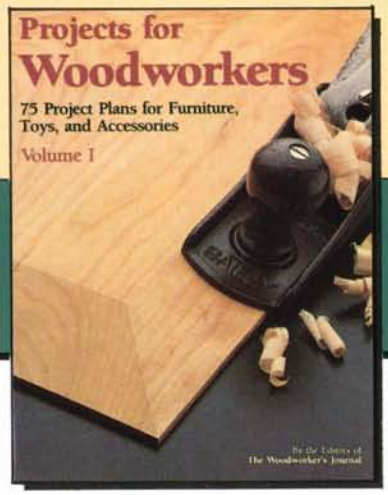

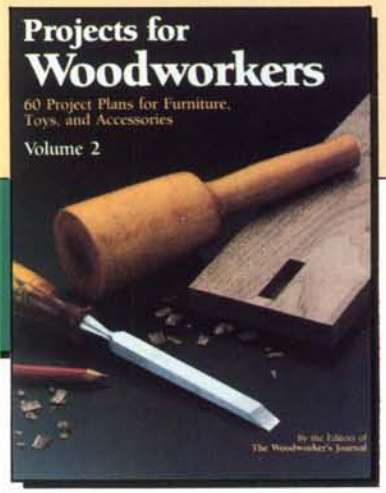

Country Charm

Shaker Wall Clock

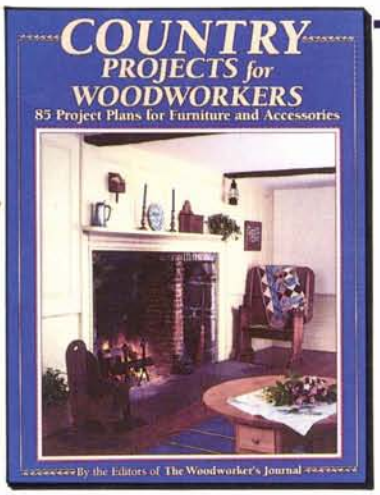

Doughbox End Table

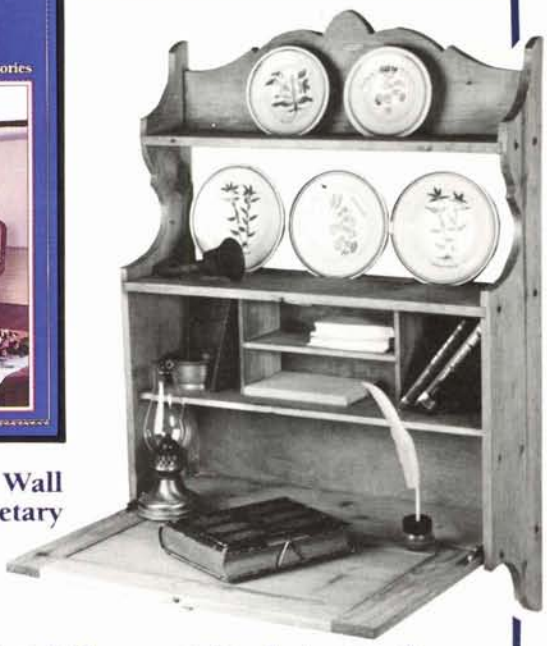

Wall Secretary

85 projects • 163 pages • 82 photos • softcover
over 350 illustrations • $16.95 plus postage

You'll find more information on this and other books from ***The Woodworker's Journal*** on page 67. To order, use the handy order form bound in the center of this issue.

Next Issue . . .

It's our Christmas edition with lots of great gift projects you'll be proud to put under the tree. A Mission-Style Dining Table, a St. Nicklaus Carving and a Jewelry Box are just a start.

Mission-Style Dining Table

Jewelry Box

St. Nicklaus Carving