GETTING STARTED WITH CNC p.44

ISSUE 277 OCTOBER 2021

Better Homes & Gardens

WOOD®

The World's Most Trusted Woodworking Resource

19 Best-Value Tools

p.32

Plus Great Plans

- Rock 'n' Roll Maze Game p38
- Pocket-Hole Jig Organizer p.60
- Midcentury Headboard & Nightstand p.22 and 26
- Glass-Sided Display Case p.50

Soundproof Your Shop p.64



TURN RAW INTO AWE™

At Penn State Industries we make it easy for you to make beautiful, functional things on a lathe. And with the largest selection of unique, well-engineered woodturning project kits, supplies and tools in the world, you have unlimited possibilities to transform raw materials into something awesome.

PENN STATE INDUSTRIES

Woodturning Kits & Supplies

1-800-377-7297 | Pennstateind.com

RU4 CNC?

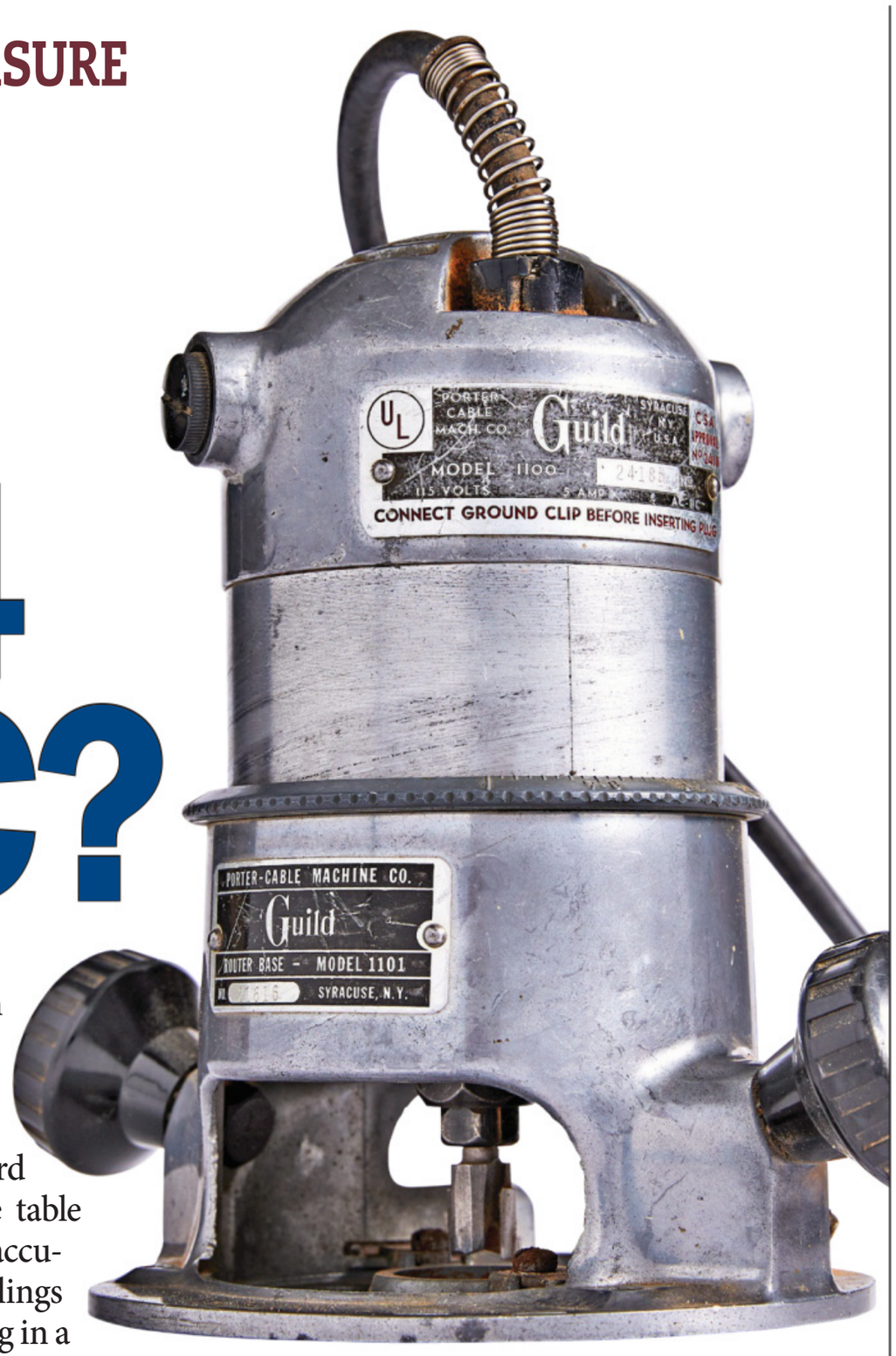

When these high-tech tools first came on the scene, they were unfamiliar, huge, and noisy, and only the pros could afford one. But they brought to the table speed, power, and repeatable accuracy, which made them the darlings of people who made their living in a woodshop. Meanwhile, hobby woodworkers derided the technology, snorting, "That's not *real* woodworking."

More than 30 years later, the machines finally became accepted in, and affordable enough for, home shops. These days, if you *don't* own one, some would question whether you are a "real woodworker."

Which high-tech tool am I talking about? The handheld, motorized router, patented more than 100 years ago.

I hear the same arguments against CNC routers: "too big," "too expensive," "not real woodworking." Manufacturers hear those arguments, too, and—like the router makers in the early 20th century—have addressed them. Some companies, such as Axiom Tool and Next Wave, make CNC machines that cost a bit more than a well-equipped cabinet saw, and take up less space. Still others, such as Shaper and Goliath, have come up with portable units that look and act more like the router in your shop. (Check out video of Lucas Peters' 5'-diameter clock, made with Shaper Origin, at woodmagazine.com/bigclock.)

But is it "real woodworking?" Whether you choose to cut parts with a tablesaw, bandsaw, router, hand tools, or CNC, those parts still need to be cleaned up, assembled, and finished. So, yes.

At the least, a CNC machine cuts parts with reliable, repeatable precision—the same necessity for which you currently make templates, or set up stops. At its best, it creates intricate carvings not possible with other power tools (and well beyond the scope of *my* skills). But it will never replace your tablesaw, bandsaw, router, or hand tools.

Sure, CNC workflow is different, and you will trade some shop time for screen time as you program the cuts. But, as with any tool, after you've used it a few times, you get the hang of it pretty quickly. Randy Johnson's "Getting Started with CNC" article on *page 44* demystifies and simplifies the process to get you under way faster. (And if you take the leap, you might also want to explore ways to keep that CNC noise in its place using the tips starting on *page 64*.)

I don't own a CNC now, but suspect I will before too long, because sometimes it's simply the right tool for the job. And shouldn't we always strive for that?

See you in the shop!



Dave Campbell
dave.campbell@meredith.com
Facebook and Twitter: @WOODeditor
Instagram: @wood_editor

Better Homes & Gardens®
WOOD®

October 2021

Vol. 38, No. 5 Issue No. 277

EDITORIAL CONTENT CHIEF **DAVE CAMPBELL**
DEPUTY EDITOR **CRAIG RUEGSEGGER**
ART DIRECTOR **KARL EHLERS**
SENIOR DESIGN EDITOR **KEVIN BOYLE**
DESIGN EDITOR **JOHN OLSON**
TOOLS EDITOR **BOB HUNTER**
DIGITAL PRODUCT MANAGER **LUCAS PETERS**
ADMINISTRATIVE ASSISTANT **SHERYL MUNYON**

CONTRIBUTING CRAFTSMEN **JIM HEAVEY, BRIAN SIMMONS, BRIAN BERGSTROM**
PHOTOGRAPHERS **DERA BURRESON, JASON DONNELLY, JACOB FOX, JAKE STERNQUIST**
CONTRIBUTING EDITORS **VINCENT ANCONA, ZACH BROWN, RANDY MAXEY**
CONTRIBUTING ILLUSTRATORS **LORNA JOHNSON, DAVID KALLEMYN, ROXANNE LEMOINE**
PROOFREADERS **SAM CADY, BABS KLEIN, IRA LACHER, THOMAS MORIARTY**

ADVERTISING AND MARKETING
VICE PRESIDENT & GROUP PUBLISHER **SCOTT MORTIMER**
ACCOUNT EXECUTIVE **BRIAN KOSSACK** brian.kossack@meredith.com
ONLINE MEDIA KIT **WOODMAGAZINE.COM/MEDIAKIT**

BUSINESS MANAGER **DARREN TOLLEFSON** CONSUMER MARKETING MANAGER **ED LICHINSKY**
PRODUCTION MANAGER **SANDY WILLIAMS** PREPRESS DESKTOP SPECIALIST **ALEXANDER GRAY**
COLOR QUALITY ANALYST **JOHN SANTUCCI**

MEREDITH NATIONAL MEDIA GROUP
PRESIDENT **CATHERINE LEVENE**
PRESIDENT, MEREDITH MAGAZINES **DOUG OLSON**
PRESIDENT, CONSUMER PRODUCTS **TOM WITSCHI**
PRESIDENT, MEREDITH DIGITAL **ALYSIA BORSA**
EVP, STRATEGIC & BUSINESS DEVELOPMENT **DAPHNE KWON**

EXECUTIVE VICE PRESIDENTS
CHIEF REVENUE OFFICER **MICHAEL BROWNSTEIN** DIGITAL SALES **MARLA NEWMAN**
FINANCE **MICHAEL RIGGS** MARKETING & INTEGRATED COMMUNICATIONS **NANCY WEBER**

SENIOR VICE PRESIDENTS
CONSUMER MARKETING **STEVE CROWE** CONSUMER REVENUE **ANDY WILSON**
CORPORATE SALES **BRIAN KIGHTLINGER** FOUNDRY 360 **MATT PETERSEN**
PRODUCT & TECHNOLOGY **JUSTIN LAW** RESEARCH SOLUTIONS **BRITTA CLEVELAND**
STRATEGIC PLANNING **AMY THIND** STRATEGIC SOURCING, NEWSSTAND, PRODUCTION **CHUCK HOWELL**

VICE PRESIDENTS
BRAND LICENSING **TOYE CODY** AND **SONDRA NEWKIRK**
BUSINESS PLANNING & ANALYSIS **ROB SILVERSTONE**
FINANCE **CHRIS SUSIL** STRATEGIC DEVELOPMENT **KELSEY ANDERSEN**
STRATEGIC PARTNERSHIPS **ALICIA CERVINI**

VICE PRESIDENT, GROUP EDITORIAL DIRECTOR **STEPHEN ORR**
CHIEF DIGITAL CONTENT OFFICER **AMANDA DAMERON**
DIRECTOR, EDITORIAL OPERATION S & FINANCE **GREG KAYKO**

meredith

MEREDITH CORPORATION
CHAIRMAN & CHIEF EXECUTIVE OFFICER **TOM HARTY**
CHIEF FINANCIAL OFFICER **JASON FRIEROTT**
CHIEF DEVELOPMENT OFFICER **JOHN ZIESER**
PRESIDENT, MEREDITH LOCAL MEDIA GROUP **PATRICK MCGREERY**
SENIOR VICE PRESIDENT, HUMAN RESOURCES **DINA NATHANSON**
SENIOR VICE PRESIDENT, CHIEF COMMUNICATIONS OFFICER **ERICA JENSEN**
VICE CHAIRMAN **MELL MEREDITH FRAZIER**

▶ **For subscription help:** Log in to woodmagazine.com/myaccount; e-mail wdmcustserv@cdsfulfillment.com; or call **800-374-9663**, option 1.

▶ **To contact the editors:** E-mail woodmail@woodmagazine.com; write to WOOD Magazine, 1716 Locust St., LS-253, Des Moines, IA 50309; or call **800-374-9663**, option 2.

▶ **To find past articles:** Search for previous articles, plan corrections, and article updates online at woodmagazine.com/index.

▶ **To order past articles and issues:** For articles, search woodstore.net. For issues, visit woodmagazine.com/backissues.

▶ **For syndication requests or international licensing requests, or reprint and reuse permission**, email syndication@meredith.com.

Our subscriber list is occasionally made available to carefully selected firms whose products may be of interest to you. If you prefer not to receive information from these companies by mail or by phone, please let us know. Send your request along with your mailing label to Magazine Customer Service, PO Box 37508, Boone, IA 50037-0508.

© Copyright Meredith Corporation 2021. All rights reserved. Printed in the U.S.A.
Meredith Corporation allows the purchaser of this magazine to photocopy the included patterns solely for personal use. Any other reproduction of these patterns is strictly prohibited.

Please Recycle This Magazine

In This Issue of WOOD®

OCTOBER · ISSUE 277



38

PLANS

22 Midcentury Headboard & Nightstand
Add on to the neat suite that started with the dresser in our last issue.

38 Rock 'n' Roll Maze Game
Enjoy this joystick-generation update to the classic game of balls and walls.

50 Art Display Case
This airy cabinet shows off your *objets d'art*. Or make the case or table separately.

60 Pocket-hole Joinery Center
Build an organizer—a system, really—that improves speed, storage, and support.

TOOLS & TECHNIQUES

29 Two-bit Drawer Pulls
These simple handles require only a pair of common router bits.

32 Best-Bang-for-the-Buck Tools
Cry every time you use a cheap tool? Not when you choose one of these.

44 Expose Yourself to CNC
Bold new tools require a new workflow. Learn the basics of CNC in this primer.

56 All About Japanese Hand Planes
These ancient tool designs endure for reasons still valid in the 21st century.

64 Soundproof Your Shop
Keep the peace (literally!) in house and 'hood with these sound tips.

72 Tools & Materials
We review handheld drill presses, a cordless tracksaw, and more.

DEPARTMENTS

1 Taking Measure
RU4 CNC?

4 Wood-Wide Web
Woodworking past v. future.

6 Sounding Board
Your voice, your projects, your shop.

16 Ask *WOOD*
Which comes first: miter or profile?

18 Shop Tips
Block stops vise drops, and more.

80 What's Ahead
A sneak peek at your next *WOOD.*


22


60


SKIL SAW
BRAKE SAW
32

50
PILLARS OF THE ALMIGHTY

56
woodmagazine.com

There are two types of woodworkers. Which are you? The hand-powered Neanderthal or the tech-obsessed geek? The purveyor of tradition or the bleeding-edge early adopter? The defender of the old school or the admirer of novelties? We strain this false dichotomy to bring you...

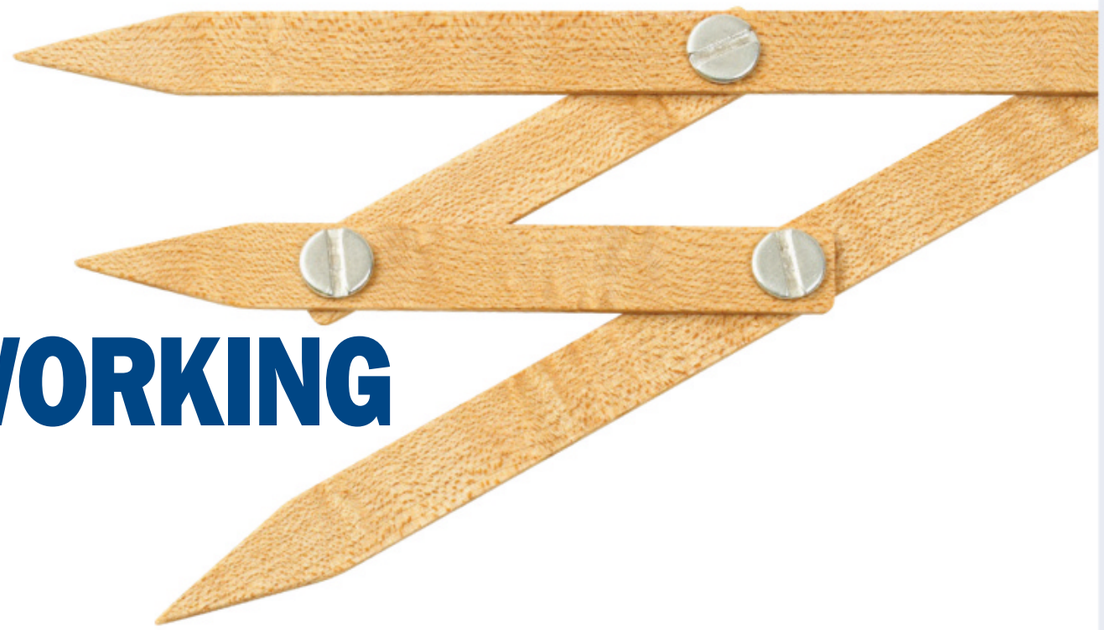

WOODWORKING PAST

The Past: Math, Measurement, Mechanisms

Fibonacci Gauge: woodmagazine.com/fibonacci
Measuring and Marking Accuracy: woodmagazine.com/accuracy
Must-have Router Jigs: woodmagazine.com/routerjigs

VS

WOODWORKING FUTURE

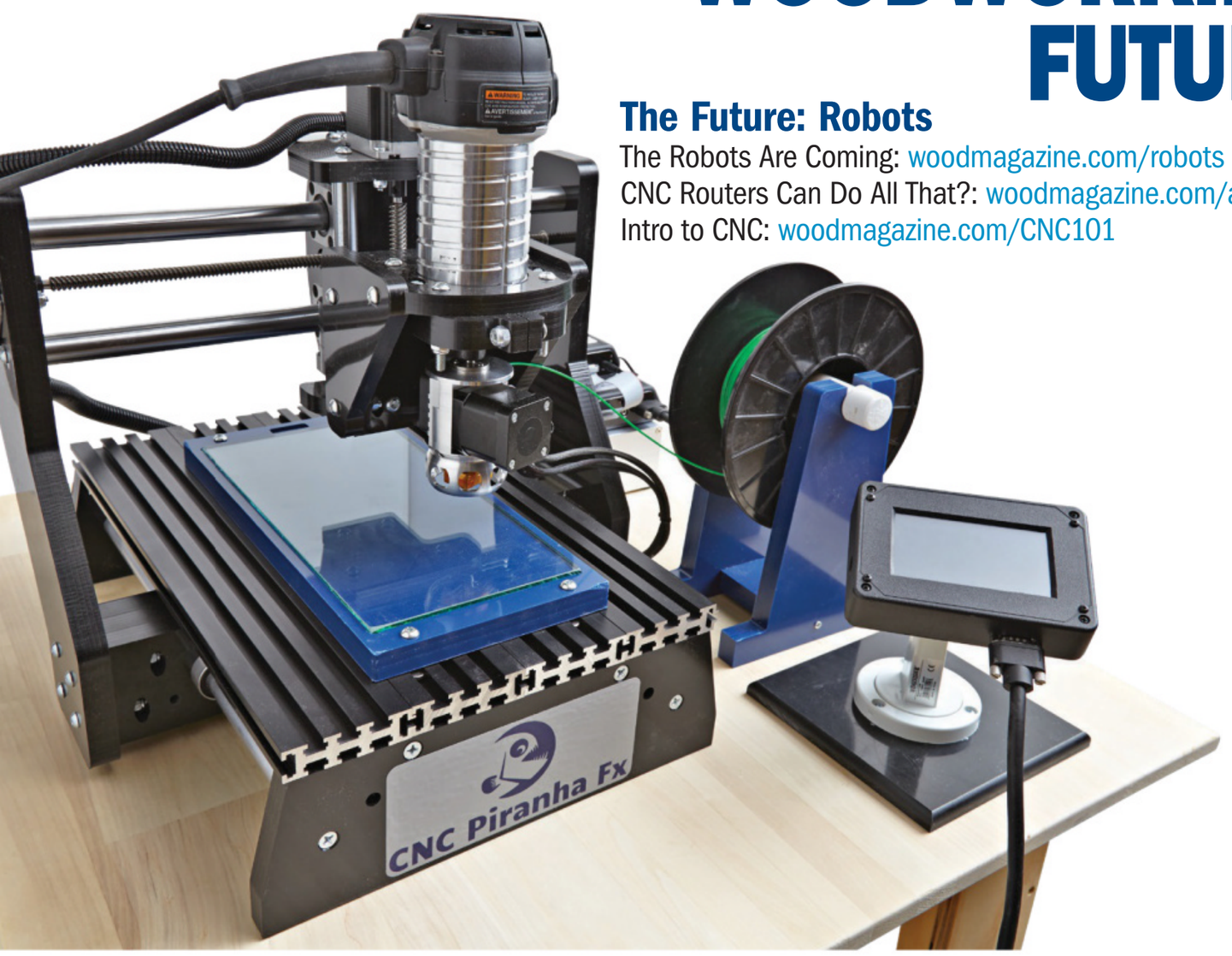

The Future: Robots

The Robots Are Coming: woodmagazine.com/robots
CNC Routers Can Do All That?: woodmagazine.com/allthatCNC
Intro to CNC: woodmagazine.com/CNC101

The Past: Cordless

Five Problem-solving Hand Tools: woodmagazine.com/5handtools
Prep Stock by Hand: woodmagazine.com/handprep
Three Essential Hand Planes: woodmagazine.com/3planes



The Future: Also Cordless

Cordless Circ Saws Compared: woodmagazine.com/cordlesssaw
The Mostly Cordless Workshop: woodmagazine.com/cordlessworkshop
Cordless Jigsaws Reviewed: woodmagazine.com/cordlessjigsaws



WOOD-WIDE WEB

WOODMAGAZINE.COM



The Past: Deep Roots

Walnut: woodmagazine.com/walnut
Bald Cypress: woodmagazine.com/cypress
Hickory: woodmagazine.com/hickory



The Future: The Final Frontier

Lunar Lumber: woodmagazine.com/moonwood
Telescoping Router Table: woodmagazine.com/telescope
Spalting. Aliens, Probably: woodmagazine.com/aliens

UPDATED WITH EVERY 2020 ISSUE!

272 issues of WOOD®
at your fingertips.



The WOOD® Archive on USB

Complete. Searchable. Compact. $149.95

Get yours today at **woodstore.net/272issues** or call **888-636-4478**

BONUS: Now includes all 52 issues of the classic Weekend Woodworking Projects magazine!



Sounding Board

YOUR VOICE

Life-size figures honor larger-than-life heroes

My brother is a 20-year Air Force veteran who spent 6 years overseas, and I have been a woodworker for as long as I can remember. Our vocations collided when I was invited to the 10-year reunion of his first tour. There, one of his comrades told the harrowing story of a mission where their unit was ambushed and fought with everything they had for more than 13 hours, yet every member made it back, exhausted, but safe.

Amazed, I asked how that was possible, and at his reply—"Because of our training, it almost becomes mechanical"—I instantly pictured a soldier standing out, ready-built, in mechanical form. That conversation inspired me to build this series of life-size wood figures I call Some Give All.

As I built the first figure, I decided it needed a K9 companion, and The Handler *(*below left*) was born. With those figures complete, though, I felt incomplete. So, inspired by the stories of other veterans, more figures started to take shape in my mind: one badly wounded and another reaching to help a fallen comrade (*Selfless*),* below right*; another figure crawling and, with his dying breath, holding out his heart (*Sacrifice*); and— my favorite—a bowed figure with one arm outstretched on a grave marker (*Never Forget*).*

Some Give All *has been shown at several galleries and won many awards at art shows. I'm just honored to use my woodworking skills to open people's eyes as to what those in uniform (and their families) go through, and what they are willing to do for one another.*

—Daniel Kaminski
Mio, Mich.

See all of the pieces in *Some Give All*, including a video of Daniel's work, at woodmagazine.com/somegiveall, or by pointing your smartphone's camera at this code.



Score twice for the win

Regarding your article about cutting acrylics and plastics in issue 274 ("Ask WOOD," May 2021), I've had good luck cutting plastics on the tablesaw—chip-free—with this procedure: Raise the blade just barely above the table surface and make a shallow cut. This flattens the blade's cutting angle and scores clean edges on the cutline. Flip the sheet over and repeat the scoring cut on the other side, as shown at right. *Finally, raise the blade just high enough to complete the cut and make one last pass. I enjoy your magazine!*

—Jim Graves
Asheville, N.C.

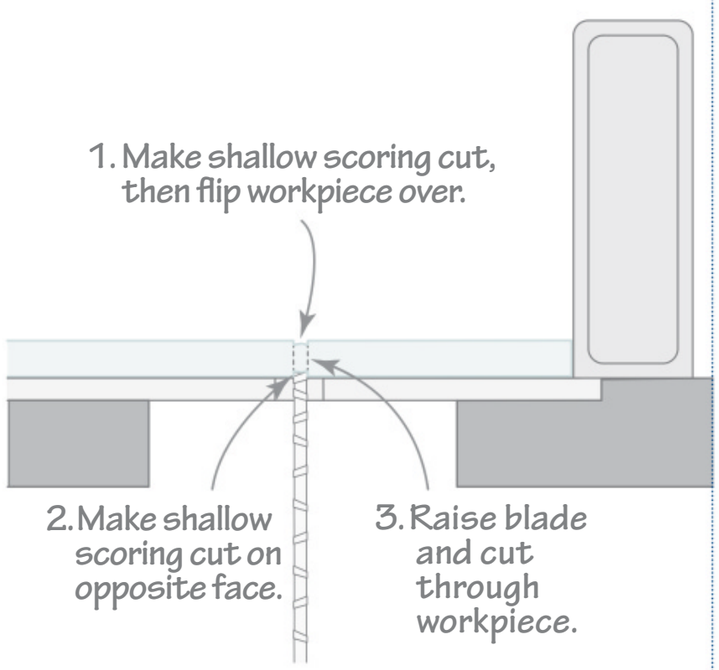

continued on page 8

Connect with us

facebook.com/woodmagazine
twitter.com/WOOD_magazine
pinterest.com/woodmagazine
instagram.com/woodmagazine

E-mail **woodmail@woodmagazine.com**; or write to *WOOD* magazine, 1716 Locust St., LS-253, Des Moines, IA 50309; or call 800-374-9663, option 2.

***WOOD*® magazine** never uses outside parties to solicit subscription renewals. The safest, easiest way to renew your subscription is with a credit card online at woodmagazine.com/myaccount. If you have questions about a renewal offer you've received, please call our customer service line at 800-374-9663, and select option 1.
We're happy to help.

CASTLE TSM-12 Pocket Cutter

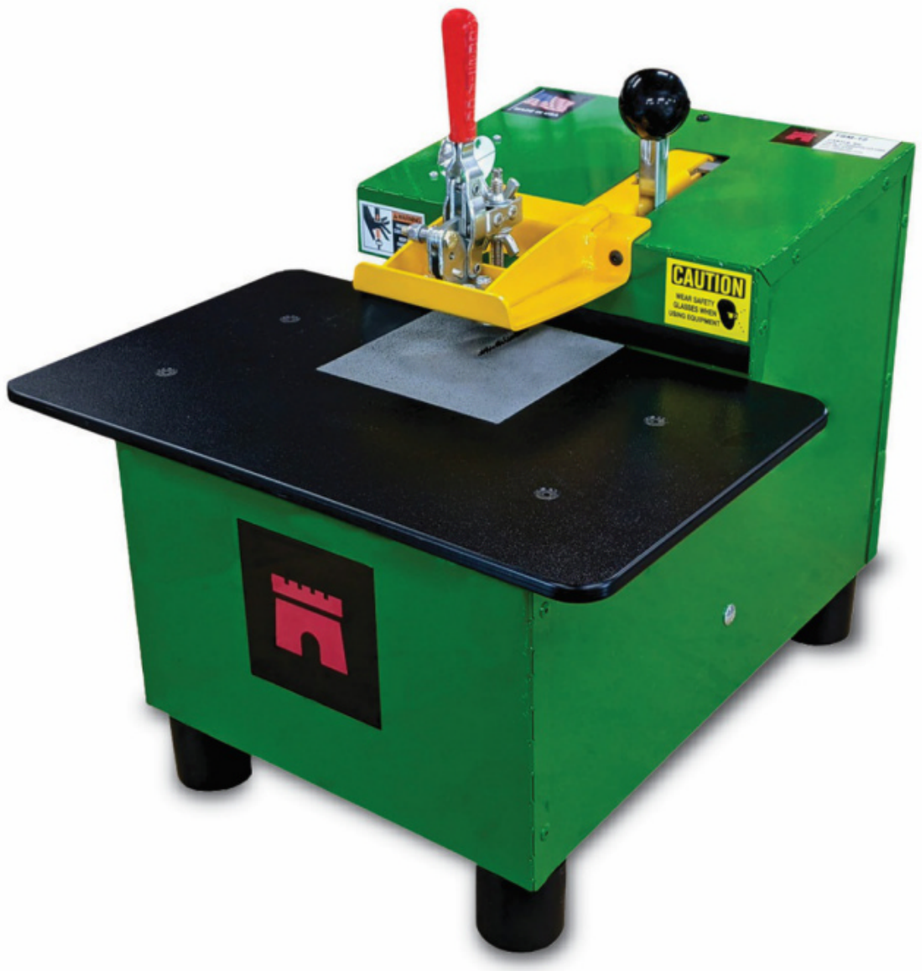

Professional pockets with pilot holes... in seconds.

The TSM-12 benchtop pocket cutter machine routs the 6 degree, low-angle Castle Pocket with the pilot hole in less than 2 seconds. Pockets are clean with no tear out. The superior low screw angle minimizes joint shift while providing strong, stable joints. Features include:

- Bosch 1617 Router with a 3/8” three-flute solid carbide router bit
- Bosch Colt Router with a 9/64” premium drill bit
- Low-angle pockets minimize clamping needs for assembly
- Material thickness range from 1/2” to 1-1/2"
- Pockets with pilot holes are created with one simple clamp/pocket lever motion.

www.CastleUSA.com



systemthree.com

SYSTEMTHREE®

WA MADE IN LACEY, WASHINGTON 98516





Sounding Board

YOUR VOICE



FOR THE PRO IN YOU

Expect professional results. Choose Titebond wood glues.







Titebond wood glues are preferred by pros more than 7 to 1. Whatever your project, you can trust us to help you achieve the best results each and every time.

Titebond®

titebond.com | 1-800-347-4583

01105_5488TF

It's about time

I read the rather nasty comments by Mike Gaule in issue 273 (March 2021 "Sounding Board") regarding the Entryway Catchall made by Bob Palmer. Mr. Palmer stated he was a new woodworker, and as a community of people interested in a common pastime, we should encourage new interest in the craft. Mr. Gaule's comments, I believe, will have the opposite effect.

We all need to remember that none of us started as skilled project builders. We got better through training, teaching, practice, and—above all—encouragement. Mr. Palmer, your Entryway Catchall is a good example of someone learning a new craft and taking pride in the end result. Good for you, and keep practicing and learning new techniques.

—Mitchell Schell
via email

We didn't interrupt you, Mitchell, because you were on a roll (and frankly, we were inspired by your message). But Mike was voicing his displeasure with the *design* of the Entryway Catchall, not Bob's execution of it. In our instant-response, social-media world, it's sometimes hard to remember that you can't respond to a photo printed in a magazine right below the photo itself. (It's a time-travel thing.) But we do want to run right out and mentor someone after reading your letter, Mitchell! So, thanks!

Sounding Board

YOUR VOICE

No glue, no problem

I really enjoyed Matt Kenney's article, "Crafting a Kumiko Panel" and the accompanying Tea Box project in issue 275 (July 2021). It arrived shortly after I completed my own kumiko coffee table, shown below. *Just as with Matt's project and technique, I assembled the* asa-no-ha *pattern with no glue—each piece is friction-fit. I used Japanese spruce for the light pieces; the dark pieces are mahogany. A glass top (removed for the photo) protects the panels.*

—Juliana Shei
Niskayuna, N.Y.



Uncle J.T. leaves a legacy

Some 15 years ago, I began woodworking thanks to mentoring and encouragement from my uncle J.T., who was a master woodworker. Since he passed away recently, I have been helping my aunt dispose of some of his things, including items in his shop.

That's where I found several stacks of woodworking magazines, each 18–24" tall, containing mostly issues of WOOD® *magazine dating back to the 1980s. They reminded me of the many times he would sit in his shop and flip through back issues. I have been bringing those issues home by the armload and as I go through them, it makes me cherish even more the many items he made.*

Even without J.T., I plan to continue woodworking, hoping to get better at it with your help. I feel that the number of WOOD *magazines he accumulated and used is a testament to the quality of your publication. Keep up the good work.*

—Danny Nixon
Bremen, Ga.



Can someone please explain?

I do not understand the proclivity of woodworking magazines to waste pages showing readers how to build a workbench or a shelf for their shop. It would seem to me that if you cannot design and build something this simple, you cannot call yourself a woodworker.

—Craig Henry
Waukesha, Wis.

continued on page 10

Oneida® Air Systems
The Industry Leader in Dust Collection

SUPER DUST DEPUTY®

Turns your single stage dust collector into a cyclonic super collector!

For 1HP - 3HP Single Stage Dust Collectors



- Pre-separates 99% of dust & debris before it reaches your collector
- Maintains continuously high airflow to your tools
- Saves money on replacement filters
- Eliminates downtime needed for filter and bag cleanings

DUST DEPUTY® DELUXE

Turns any wet/dry vacuum into a cyclonic super vacuum!



- Now 20% more efficient with Neutral Vane Technology
- Pre-separates 99% of dust & debris from the airstream
- Eliminates clogged filters and suction loss
- Saves time & money on expensive replacement filters & bags

U.S. Pat. 6833016 RE40048, 7282074 Dust Deputy TM US Trademark Reg. 4599918

Many styles to choose from!

oneida-air.com
MADE IN THE USA SINCE 1993

Sounding Board

YOUR PROJECTS

*Although he doesn't play marimba, **Wyatt Scheibner**, of East Wenatchee, Wash., wanted to see if he could make one. So he did, out of ash with padauk bars, each of which Wyatt meticulously tuned by gradually removing material from their bottoms.*



*The "Anniversary Vase," crafted by **Dan Guerra**, of Sister Bay, Wis., incorporates 16 segments in each of its 16 layers. Hardwoods include red and white oak, zebrawood, purpleheart, rosewood, yellowheart, wenge, maple and spalted maple, bubinga, padauk, and walnut.*



***Fred Eblin**, of Rancho Santa Margarita, Calif., designed and built this whimsical 12" veneered keepsake box. The lid features a marquetry fox that appears to chase the marquetry rabbit around the box's circumference.*

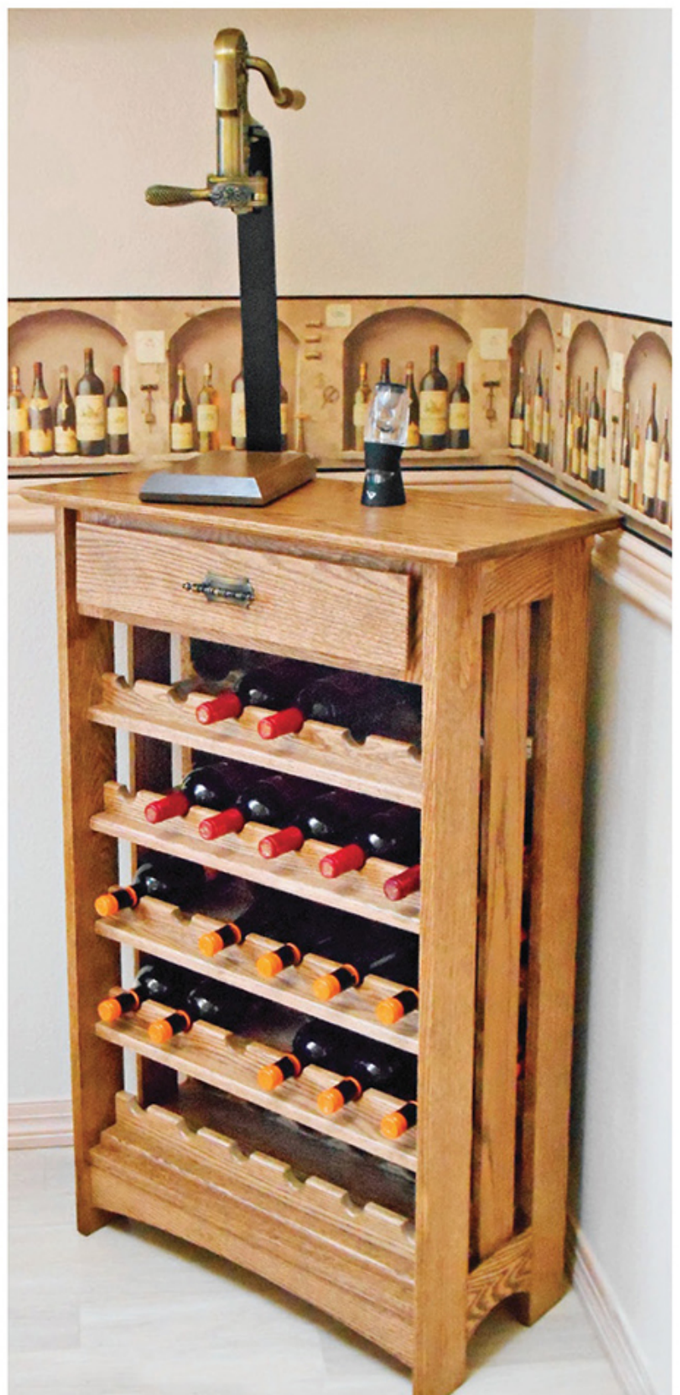

***Jim Allen**, of Lakeside, Ore., combined plans for the Wine Rack in issue 216 (Dec/Jan 2012/2013) with pictures of another wine rack his wife liked, and came up with this handsome version of his own. The added drawer stores wine accessories.*

Sounding Board

YOUR PROJECTS



*Thanks to too many small kitchen appliances and not enough storage, **Dan Neyens**, of Bonney Lake, Wash., designed and built this Northwest-themed utility cart from white oak trimmed with leopardwood details. The scrollsawn cutouts include walnut, myrtle, and bocote pieces.*



*For each of his grandchildren, **Rick Percy**, of Lewis Center, Ohio, builds a dresser. This one, made from curly cherry with ambrosia maple panels, is Rick's third, for his newest grandson, Ryder.*

SHAPER

UPGRADE YOUR WORKSHOP

Precision Cutting Simplified

Shaper Origin is an easy-to-use handheld CNC router that brings digital precision to the craft of woodworking. With Shaper Origin + Workstation, you can create perfect box joints, mortise and tenon joinery, and more with ease and accuracy.

shapertools.com

Tools, Toys, and Two Cars

In front of his parked cars, Daniel utilizes the space for a bench and racks for lumber storage.

Daniel Webb developed his love of woodworking spending time with his grandfather, a master craftsman. But he had to wait decades before having the space to pursue his own dream workshop.

When Daniel and his family, with three young children, moved into their new home, he saw his opportunity to build out his shop in the attached two-car garage. A third car-size work bay provides room for bicycles, toys, and lawn-care equipment, but has also become part of Daniel's woodworking haven.

First, Daniel maximized the walls for storage. Pegboard above his workbench keeps hand tools readily available, and two racks above an adjacent bench separate lumber

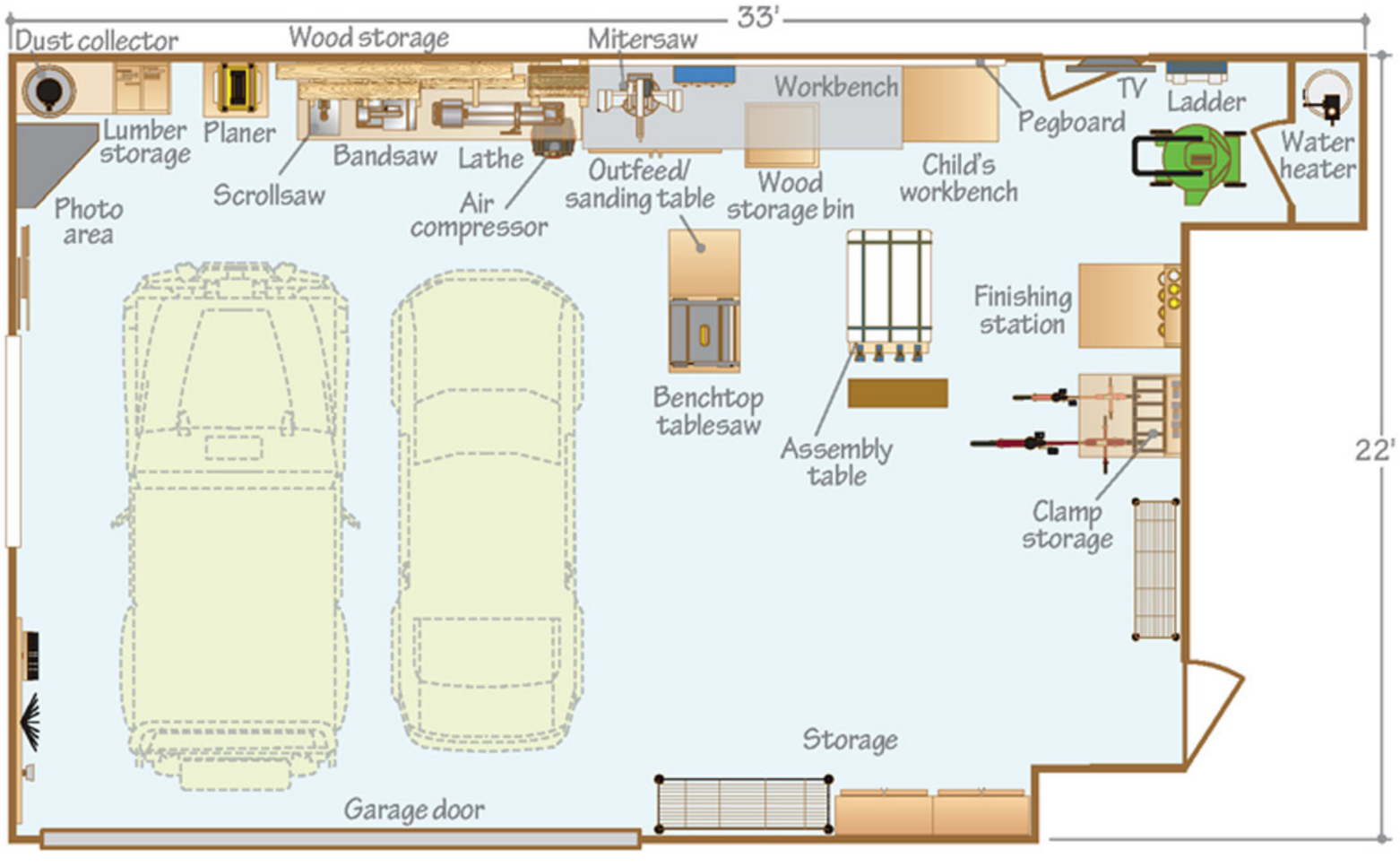

continued on page 14

NEW Editors' Choice

Shop Super Bundle

20 of our favorite downloadable shop plans — only $25

woodstore.net/shopfavorites



For easy access, Daniel's tablesaw rests on a cabinet that also serves as a sanding table and outfeed support.



Daniel upcycled a pair of commercial diaper-changing stations into ideal work centers that close up to both save space and conceal the contents from kids.



Daniel set up this simple photo booth with hanging LED lights for shooting photos of his projects to sell.

from turning blanks. A pair of space-saving drop-front finishing and assembly cabinets provide additional workspace when needed.

Because Daniel prefers working on smaller projects, benchtop power tools, such as his tablesaw, planer, bandsaw, and lathe, serve his needs just fine. A compact miter-saw saves bench space.

To aid in gluing and clamping projects, Daniel relies on a freestanding assembly table, with T-track for adding clamps and fixtures. Drawers below and clamp racks on the ends of the cabinet provide storage, as does a cabinet under his main workbench.

Daniel mounted his dust-collector's motor and blower on the wall near the ceiling inside a plywood surround that helps reduce noise. The system draws dust through a cyclone separator on a steel drum. He ran the dust-collection ductwork along the back wall of the garage. He says it fulfills the goal of keeping the dust off his wife's car.

Daniel has been able to use his passion and efficient space to start a side business, Webb Wood Designs, making craft items. To help sell his projects, he created a table-top-sized photo booth illuminated by a pair of 4' strip lights, as shown in the photo *above*. He changes the angle of the lighting by adjusting the length of the chains.

Daniel says spending time in the workshop provides a spiritual retreat that gives him time for quiet and reflection. When it comes to spending money on tools and supplies, he smiles and says, "I have a wonderfully supportive spouse who encourages me in my hobby."



Daniel spends his daytime hours as a church business administrator. He looks forward to his time in the workshop, where he can relax and express his creativity.

Show us your shop

Send high-resolution digital photos of your shop to woodmail@woodmagazine.com *and we may showcase it in the magazine!*

Super-secret Super Bundle

These downloadable plans have something to hide.









20 plans for $25

woodstore.net/secrets



ENGRAVE | CUT | INLAY

- Laser engrave & cut wood at the touch of a button
- Customize woodworking projects for added value
- Laser systems ranging from 16" × 12" – 40" × 28"
- Wattage configurations up to 120
- USA made

888.437.4564 | SALES@EPILOGLASER.COM | EPILOGLASER.COM/BHG-WOOD

EpilogLaser



Ask Wood
YOUR QUESTIONS

Q Which route to take for mitered profiles?

When routing a profile on mitered or beveled workpieces, is it better to rout the profile first and then cut the pieces, or vice versa?

—George Wu, Newton, Mass.

A

Like so many questions in life, George, the answer is: It depends. The size of the pieces, shape of the profile, and overall design of the project all factor into the decision.

In most cases, you get more consistency by first routing the profile on long blanks at the router table, then mitering and attaching each piece individually, making any adjustments to the fit as you go.

For small, delicate workpieces, such as narrow moldings, rout the profile on a wider blank first, then rip the molding from the edge of the blank [**Photo A**] and miter the pieces to length. The wider blank keeps your hands safely away from the router bit and prevents blowout of the delicate piece.

Some profiles, such as round or bullnose edges, or exceptionally wide or deep moldings, require more than one pass to complete, using the router-table fence as a bearing surface for the workpiece to ride against. Here, you often have little choice but to rout the profile first. The same holds true for moldings impossible to access after assembly, such as the beading around a drawer front, or a decorative molding around a panel.

On the other hand, it sometimes makes sense to rout the profile after cutting and attaching the pieces—for example, when constructing a mitered base or frame around a panel or tabletop. After mitering the pieces and gluing them together, sand the surfaces flush and then rout the profile as the last step [**Photo B**]. Routing after sanding ensures a uniform profile all the way around the project.

Finally, rout the pieces after cutting and assembly when the profile presents a clamping issue, such as a rounded or thin edge that may crush easily under clamping pressure. Or an odd profile that doesn't allow the clamps to gain a good grip.



Have a question? Drop us an e-mail. askwood@woodmagazine.com

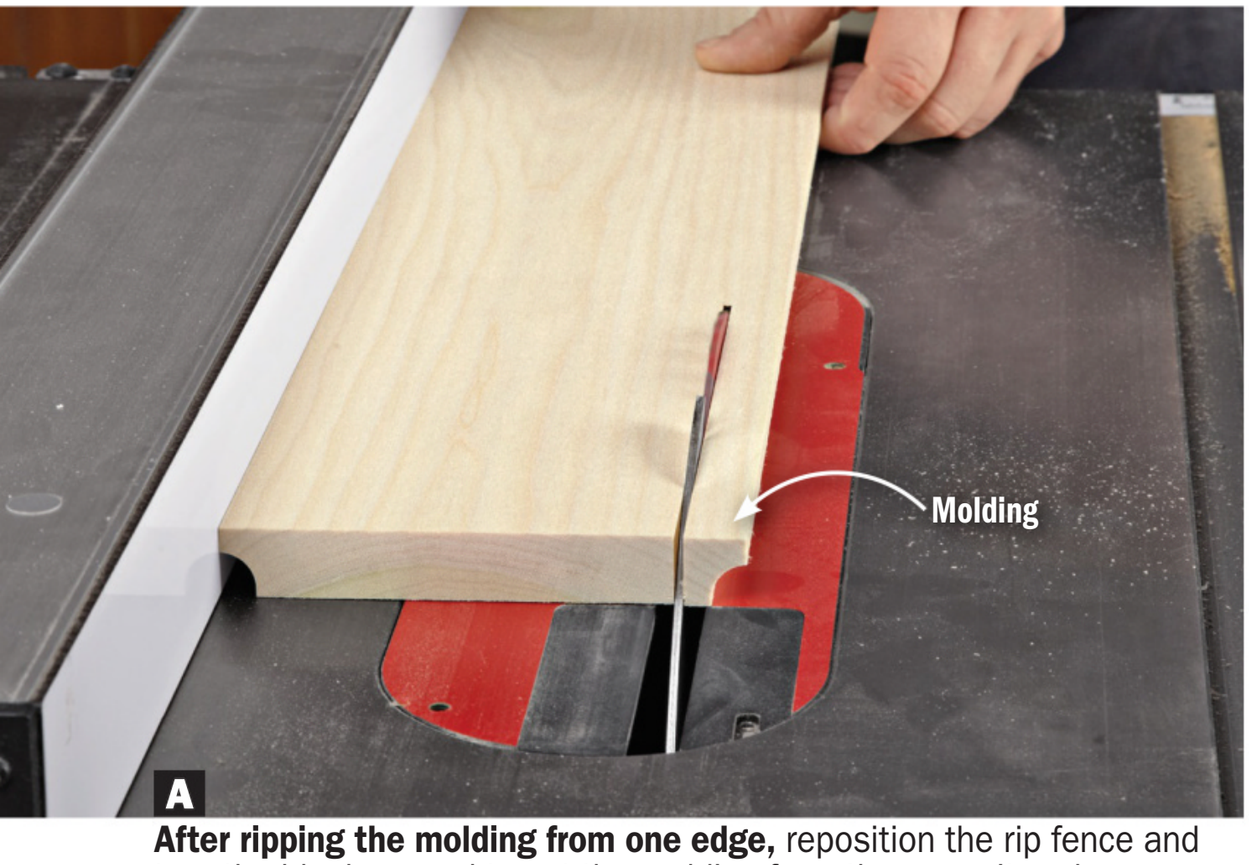

After ripping the molding from one edge, reposition the rip fence and turn the blank around to cut the molding from the opposite edge.

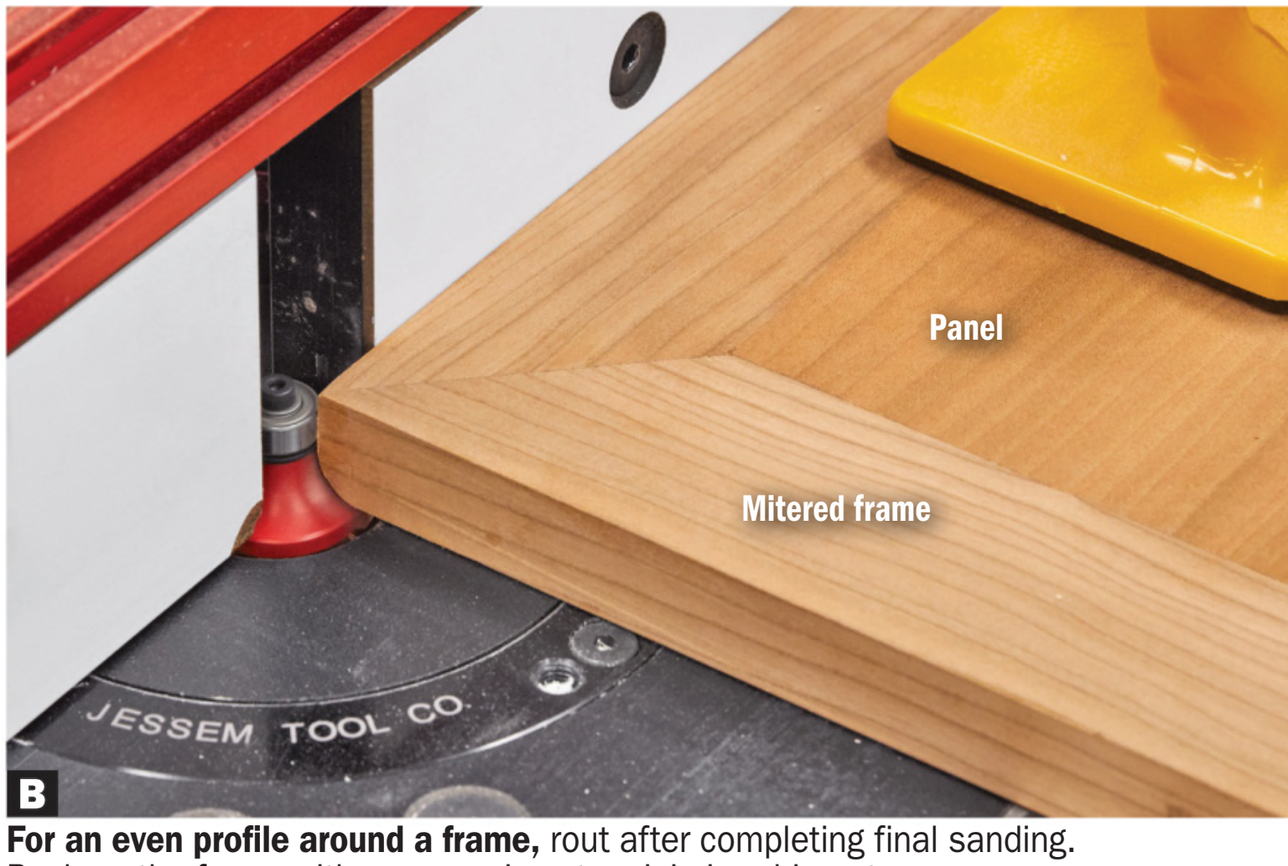

For an even profile around a frame, rout after completing final sanding. Back up the frame with a scrap piece to minimize chip-out.

INCREDIBLY STRONG

GORILLA®

WOOD GLUE

TOUGH

100% WATERPROOF

No Foam, Dries Natural Color

GLUE



100% WATER PROOF
Type I

OPEN TIME UP TO 15 MINUTES
Extended Working Time

ALL-WEATHER
Our Most Durable Wood Glue

www.gorillatough.com

©2021 The Gorilla Glue Company

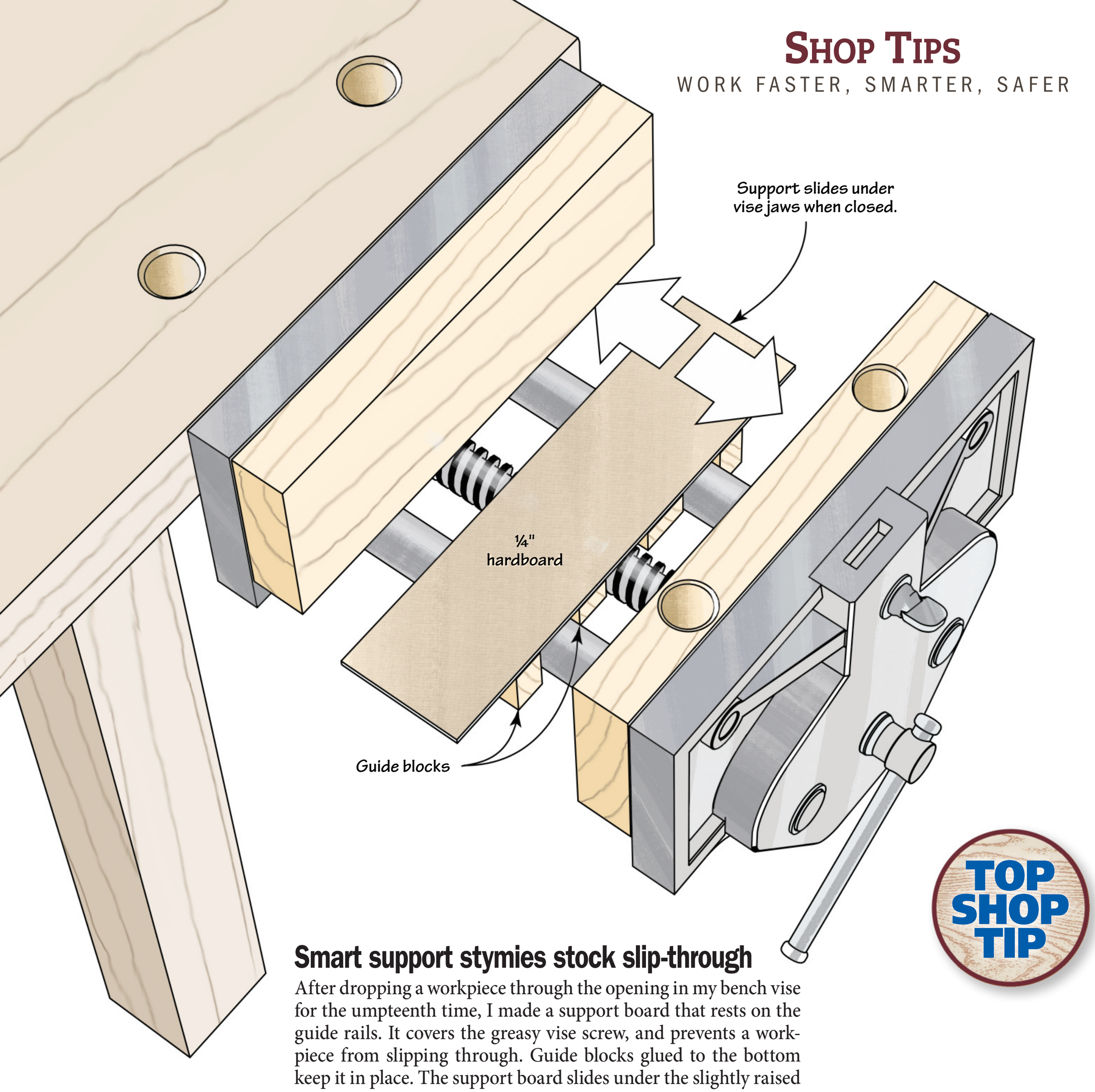

TOP SHOP TIP

Smart support stymies stock slip-through

After dropping a workpiece through the opening in my bench vise for the umpteenth time, I made a support board that rests on the guide rails. It covers the greasy vise screw, and prevents a workpiece from slipping through. Guide blocks glued to the bottom keep it in place. The support board slides under the slightly raised wood jaws and I cut it narrow enough to allow the vise to completely close. That way I can just leave it in place.

— Gene Heimerman, Perry, Iowa

Tips earn up to $150.

If your tip is the best of the issue, it wins **Top Shop Tip** honors, and you receive a **tool prize** worth at least **$300**.

Send your tip, photos or drawings, and contact info to **shoptips@woodmagazine.com**

Because we try to publish original tips, please send yours only to *WOOD*® magazine.



For sending this issue's Top Shop Tip, Gene receives a Fuji Spray Mini-Mite 3 HVLP system worth $650.



Holey solution for organized drawer storage

Using pegboard for drawer bottoms makes it a cinch to add dividers for easier organization of the drawer contents. Secure hardwood dividers to the pegboard from below with #8 flathead woodscrews, which perfectly fit the 9/32" holes.

—Michael Garrett, Paradise Valley, Ariz.

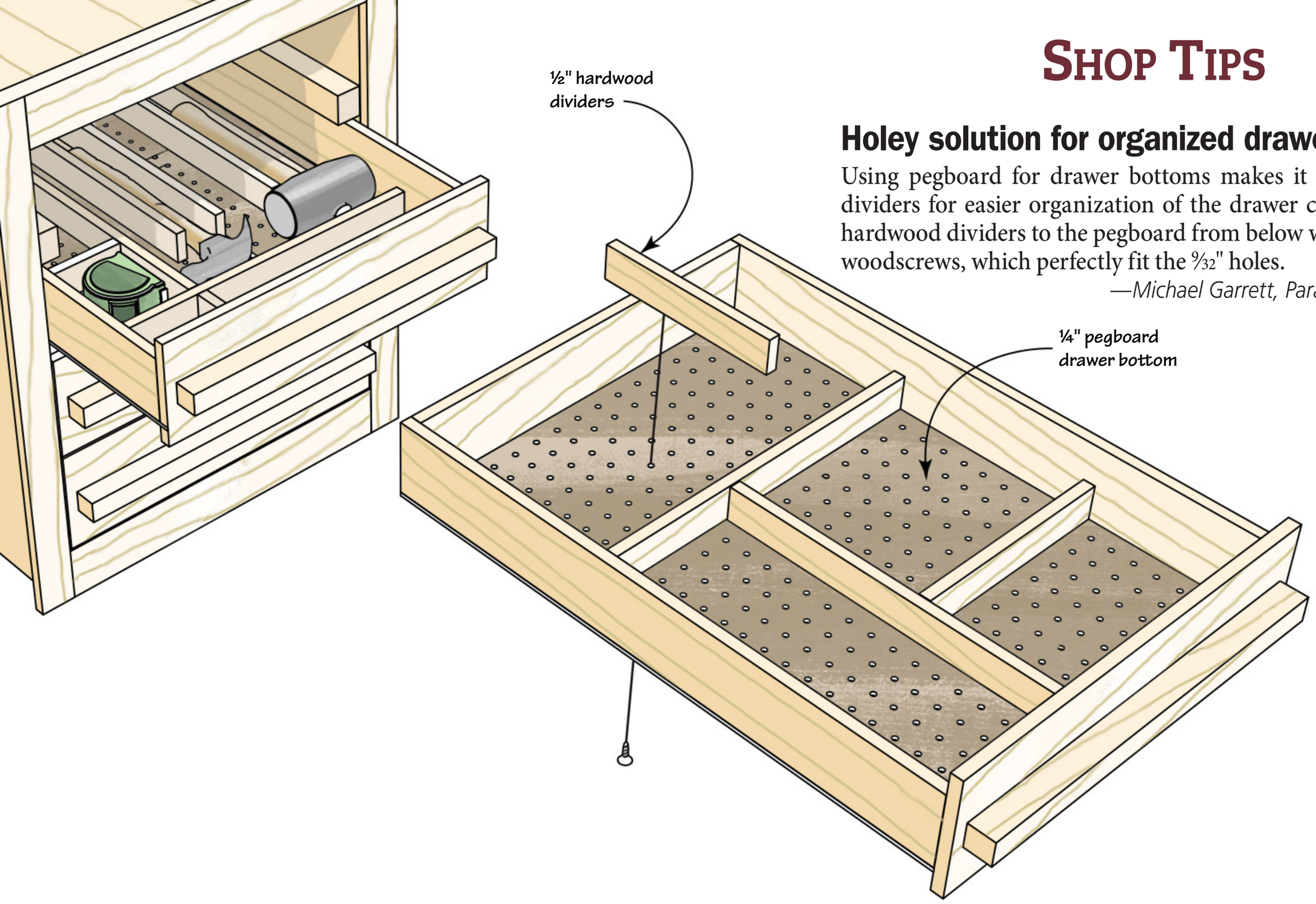

Tile saw becomes a model citizen

In my modelmaking, I've found a full-size tablesaw to be more tool than the job needs. So I adapted a 7" portable wet tile saw to better and more safely cut small parts.

I replaced the saw's diamond blade with a 7¼" circular saw blade. I also made a zero-clearance MDF tabletop with a fence and miter-gauge slot to make clean, accurate cuts. Four flathead machine screws secure the MDF top to the saw's steel top. I don't use the tilt feature of the table and the blade height is fixed, but it works great.

—Gaetan Allard, Rotonda West, Fla.

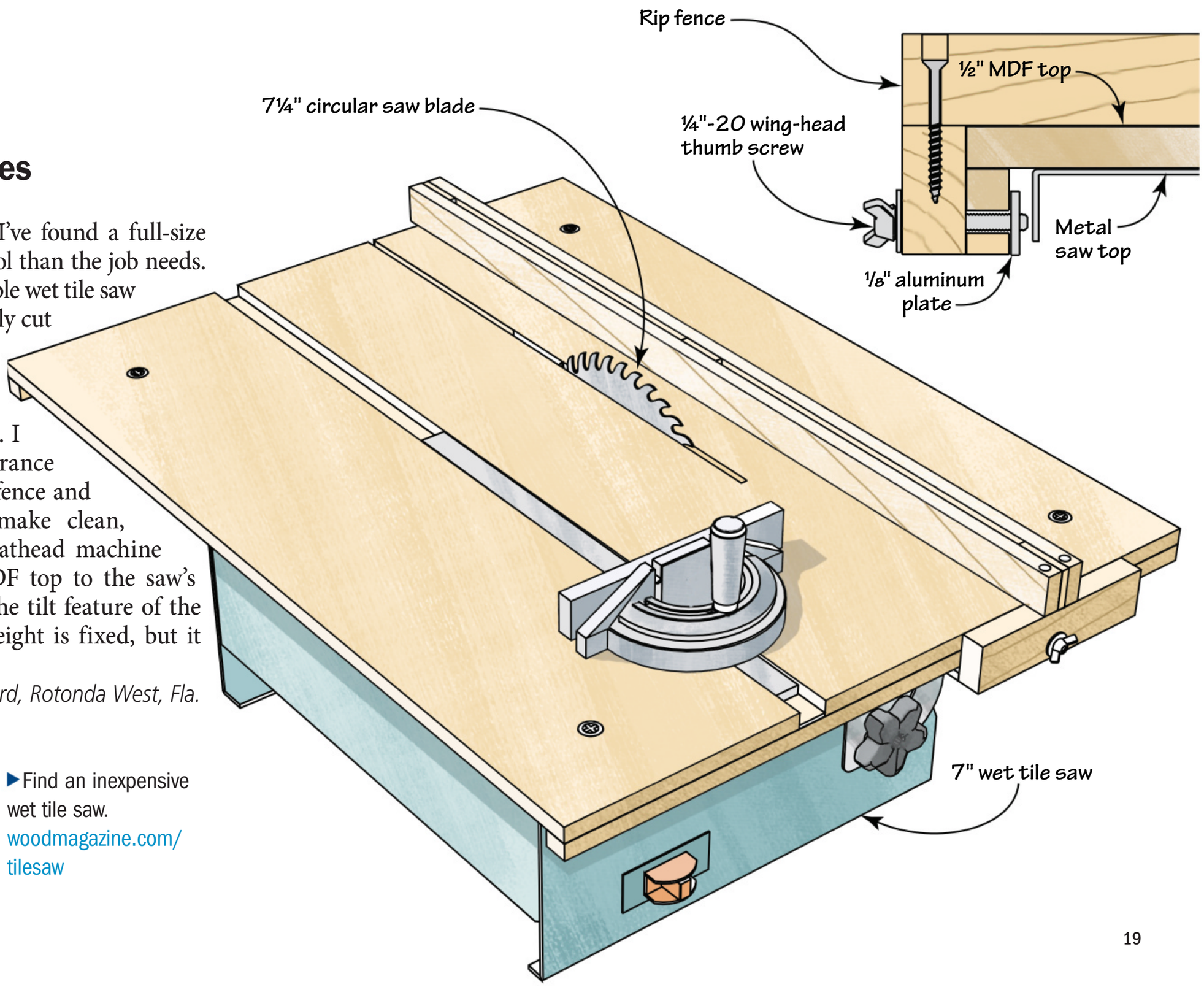

▶ Find an inexpensive wet tile saw. woodmagazine.com/tilesaw

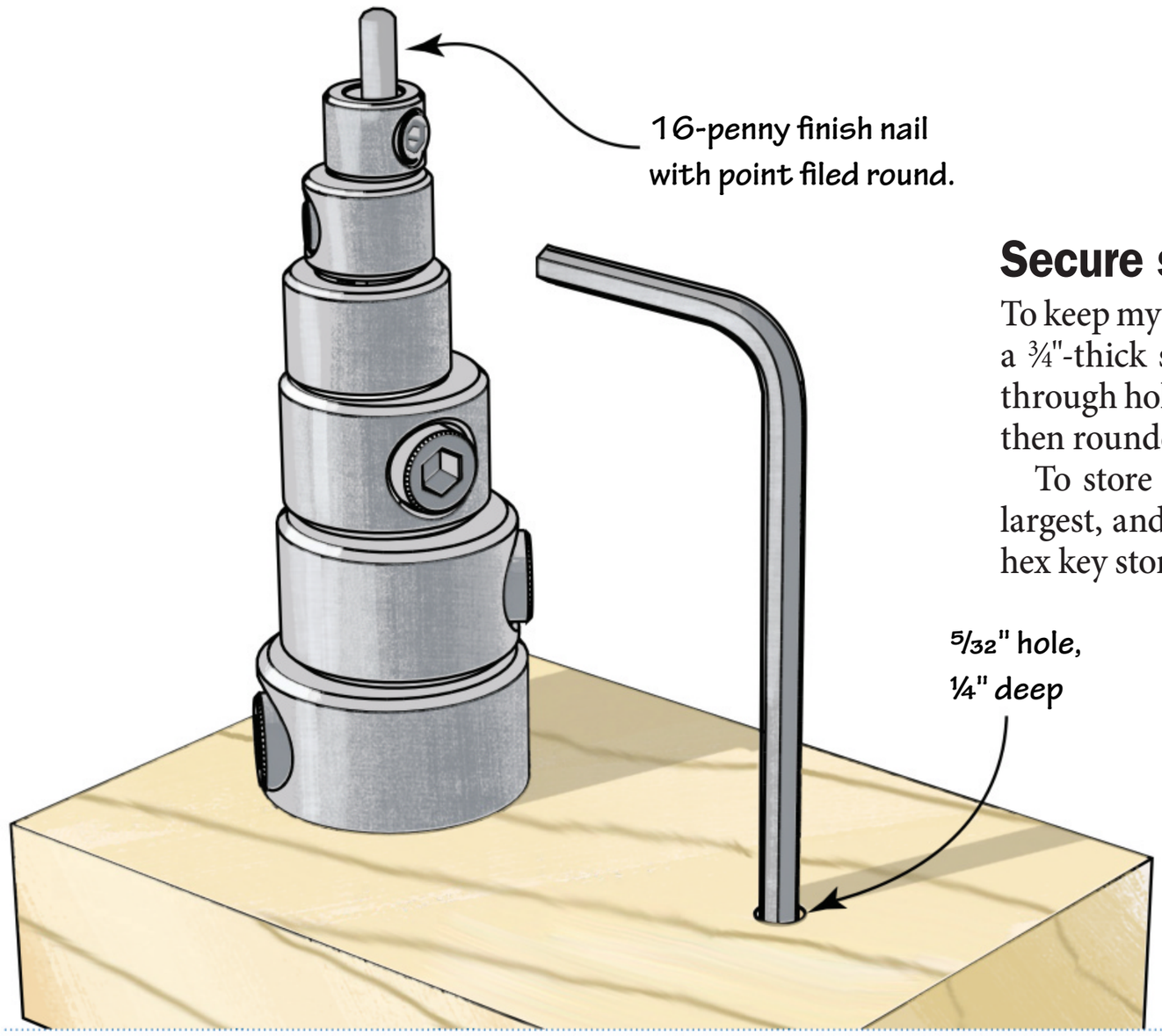

Secure stacking storage for stops

To keep my drill-bit stop collars organized, I drilled two 5/32" holes in a ¾"-thick scrap wood block, one of them only ½" deep. Into the through hole, I drove a 16-penny finishing nail from the bottom up, then rounded its point with a file.

To store the collars, I slip them over the nail starting with the largest, and secure them using the set screw on the top collar. The hex key stores in the stopped hole.

—Jeff Watson, Seattle, Wash.

Turn the tables on finishing

I needed a large turntable for applying finish to furniture projects, so I made one using inexpensive, commonly available materials.

Start by cutting the turntable top and base from scrap pieces of ¾" plywood. Cut the turntable round using a trammel base and router. Adjust the trammel to a smaller radius to rout matching circular grooves on the mating surfaces.

Next comes the fun part. For the "ball bearings," I used three golf balls. They roll smooth enough and the dimples provide just enough resistance to keep the table from spinning freely. In the groove, sandwich the balls between the base and table. Measure the gap between the base and table. Add spacers and washers at the center to fill in the gap.

Enlarge the centerpoints in the top and bottom to accept a bolt and assemble as shown with the lock nut tightened just enough to hold everything in place but still allowing the table to turn.

—Brian Bustin, Camano Island, Wash.

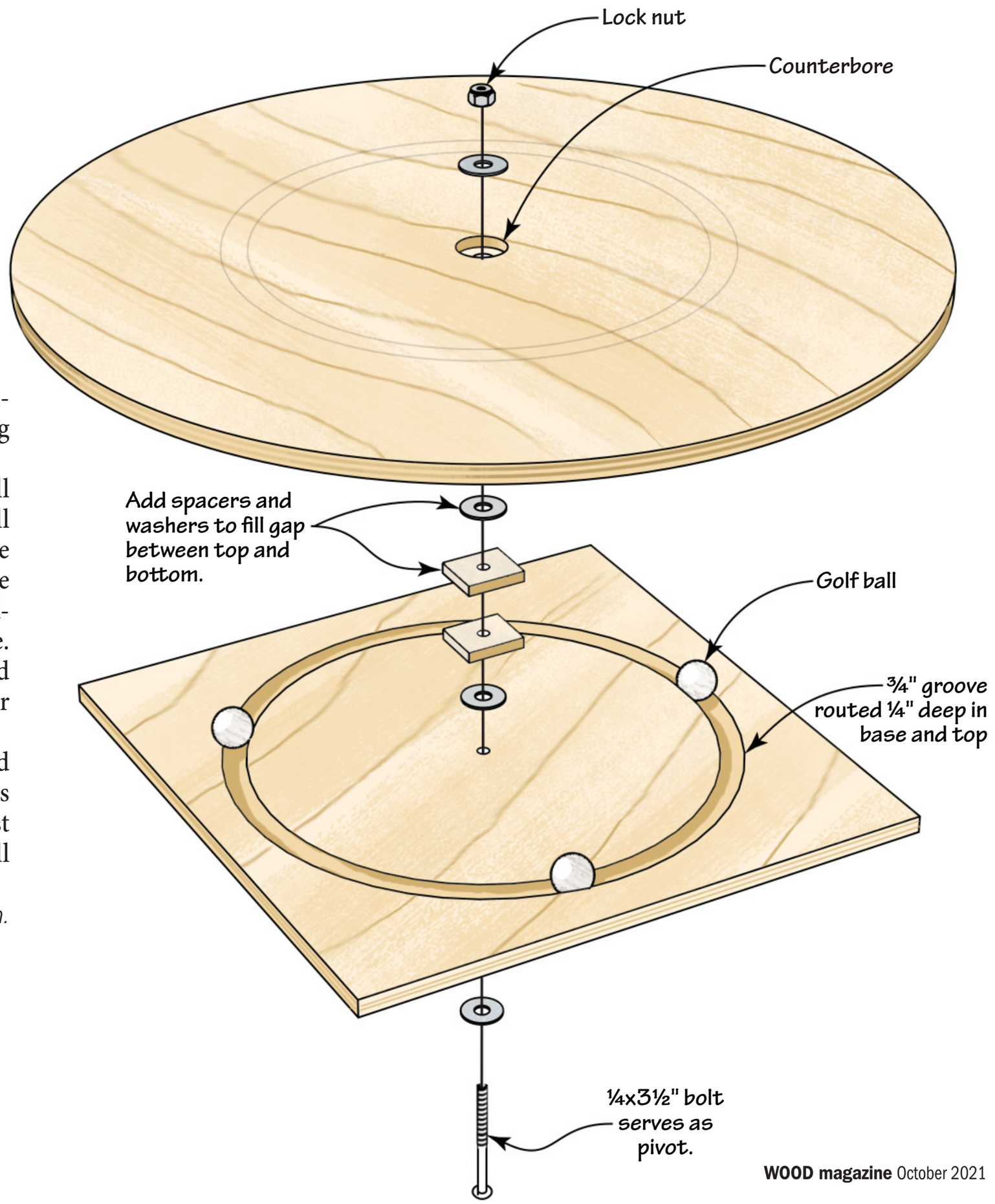

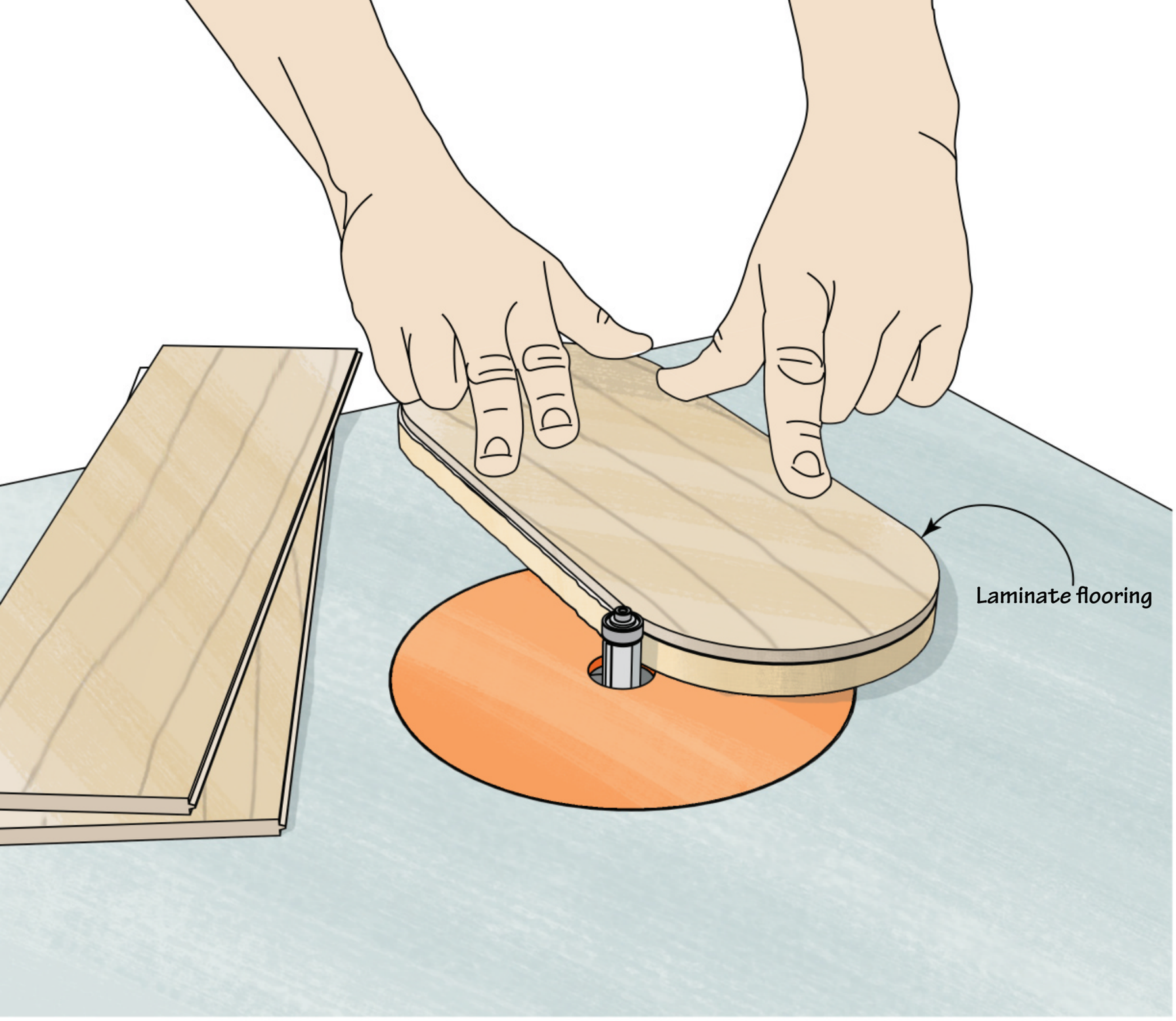

I need a new template—and step on it!

After installing laminate flooring in my house, I discovered that the leftover scraps make great blanks for router templates. They're flat, stable, and the perfect thickness to use with bearing bits. And for wider templates, I simply click together two pieces side-by-side with glue in the joint.

When my leftover supply ran dry, I started buying affordable sample laminate boards at the home center for the same purpose. I've found the inexpensive stuff with no back and little or no surface texture works great.

—Kent Merkley, Everett, Wash.



Midcentury Headboard

This wall-mounted panel works with nearly all bed-frame types.

Note: *This three-piece suite works beautifully in a main or guest bedroom. Find plans for the nightstand on* page 26 *and the dresser in the previous issue (276, September 2021).*



DIMENSIONS:
62" W × 3" D × 48¾" H

Approximate materials cost:
$325

The average person spends
33
years of their life in bed

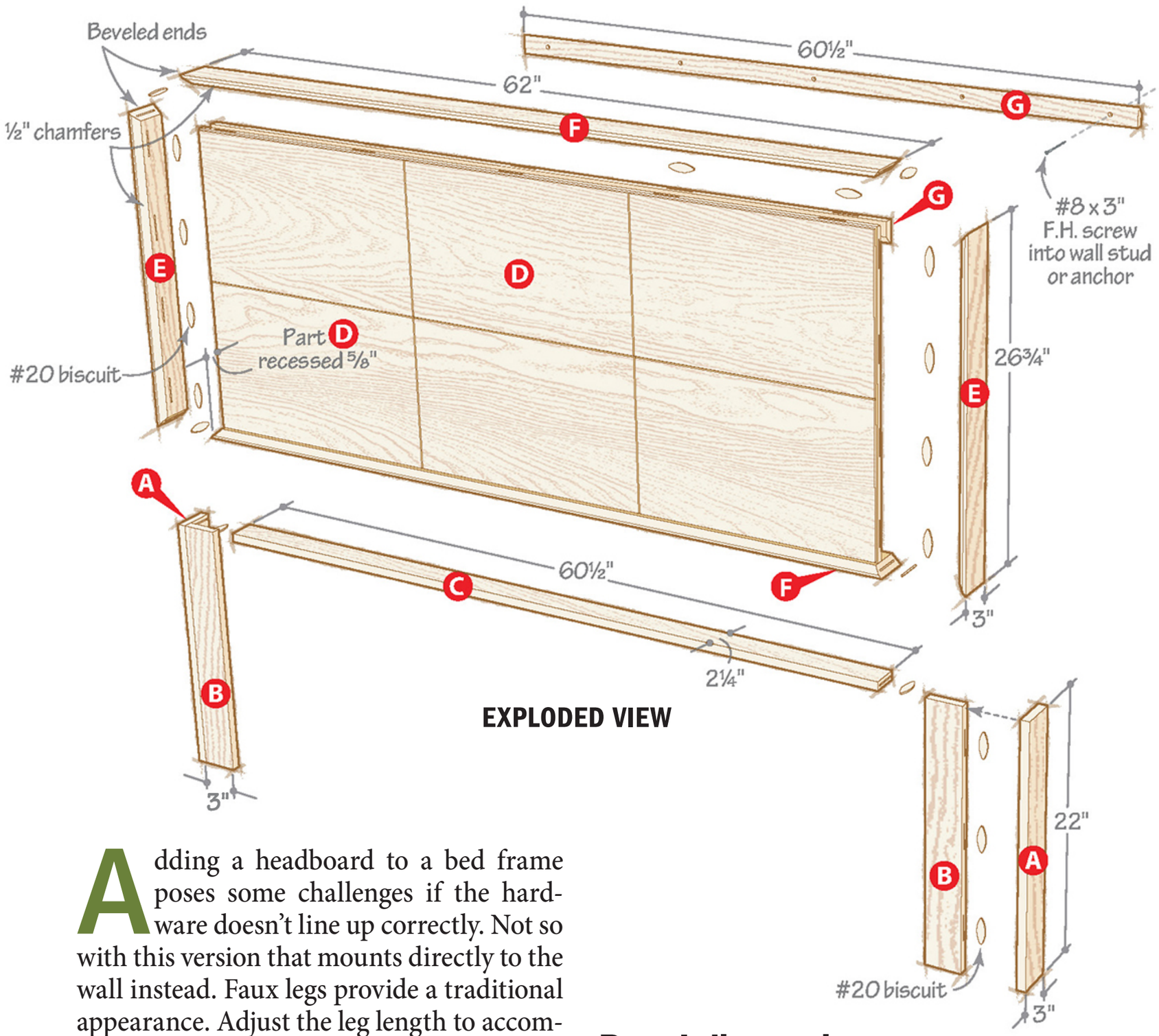

EXPLODED VIEW

Adding a headboard to a bed frame poses some challenges if the hardware doesn't line up correctly. Not so with this version that mounts directly to the wall instead. Faux legs provide a traditional appearance. Adjust the leg length to accommodate a thicker mattress or box spring.

We sized our headboard for a queen-size mattress, but adjust the length and kerf spacing as needed to suit a different mattress size. For more pieces in the same style, see the nightstand on *page 26* and the dresser in issue 276 (September 2021).

Note: *If mounting the headboard to a wall with baseboard trim, notch the leg sides (A) to fit around the trim.*

▶Clamps too short? Try this tip: woodmagazine.com/extendclampreach

Start with leg lifts

1 Machine the leg parts (A–C) to size [**Materials List**]. Cut the biscuit slots [**Exploded View**] and glue up the sides (A) and fronts (B), creating a right and left leg.

2 Glue and clamp the rail (C) between the two leg assemblies. With the glue dry, finish-sand the base assembly.

Panel discussion

1 Cut the panel (D) from ¾" plywood and cut the kerfs and rabbets [**Drawing 1, Photo A**]. Finish-sand the panel.

Tip! *If you don't own a tracksaw, use a circular saw and a straightedge.*

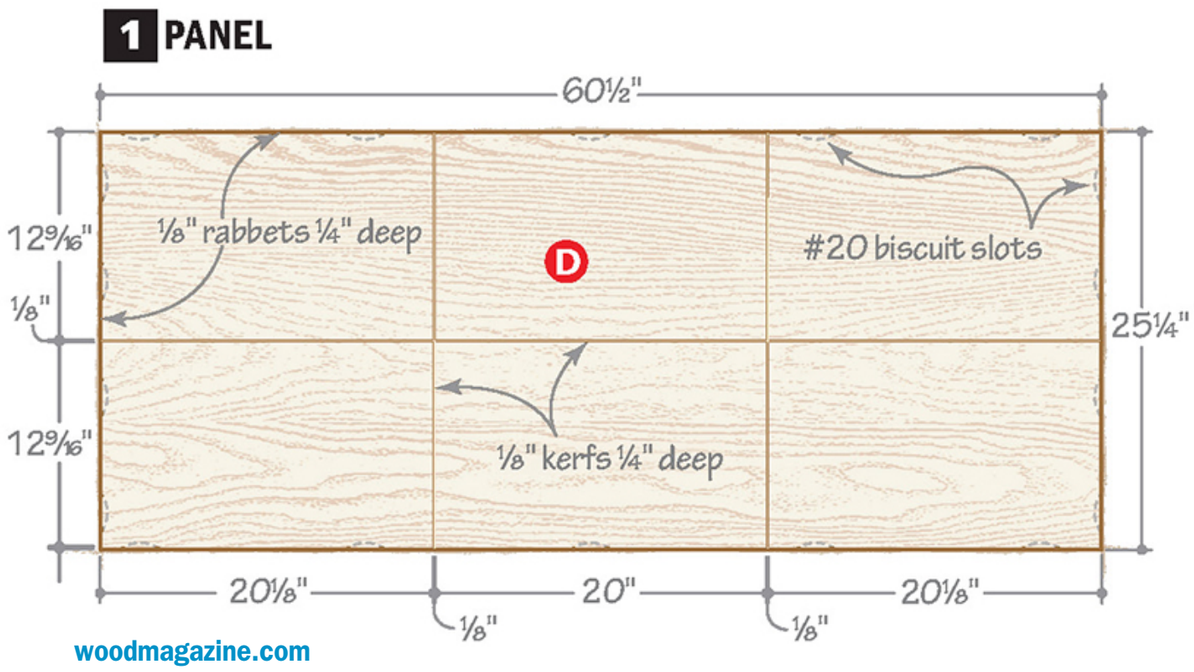

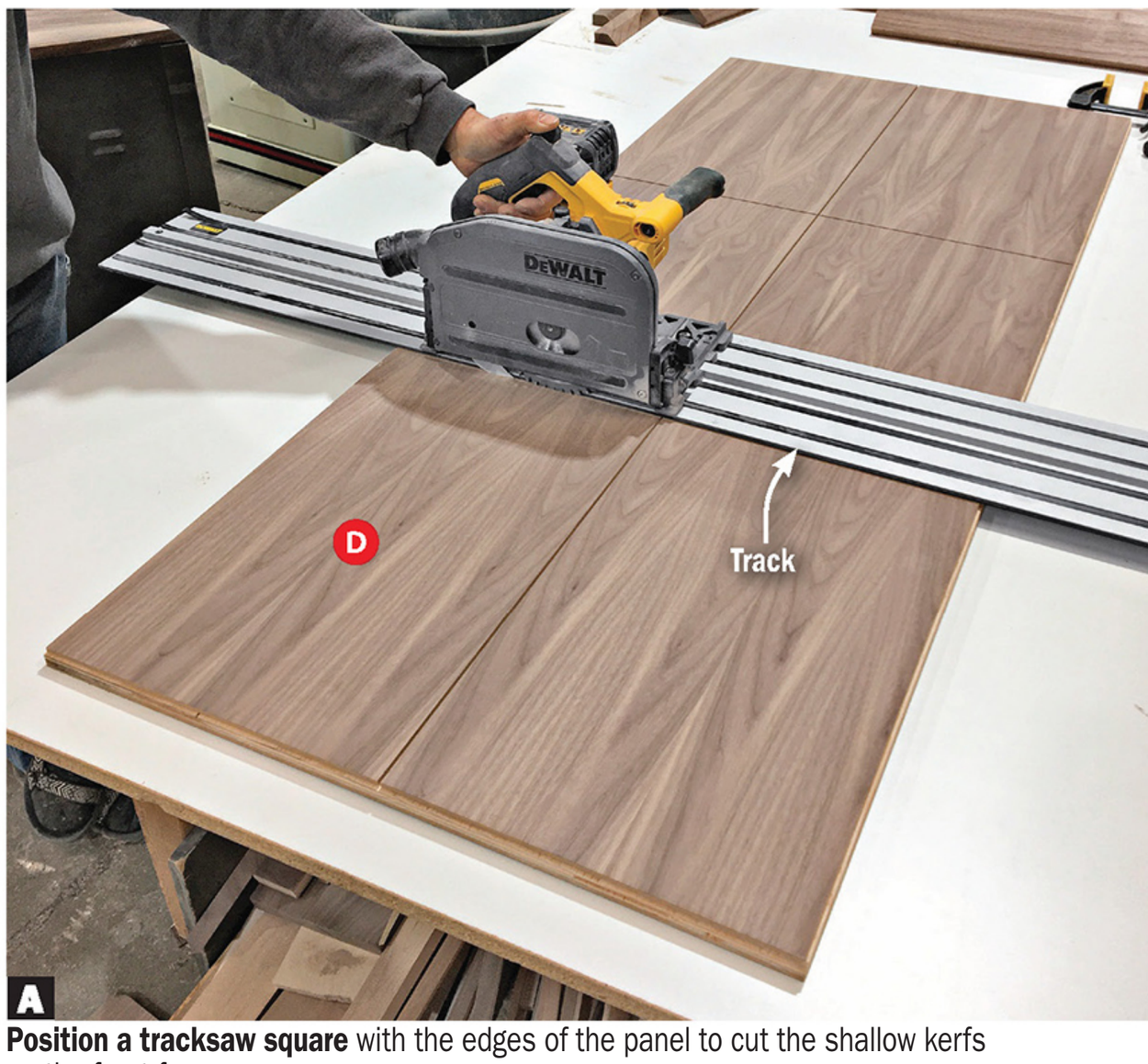

Position a tracksaw square with the edges of the panel to cut the shallow kerfs on the front face.

2 From ¾" stock, cut the frame ends, top, and bottom (E, F) to width, but 1" longer than shown. Chamfer the front edge of each piece [**Exploded View**].

3 Bevel-cut the ends of the frame pieces (E, F) at 45° to fit around the panel. Finish-sand the inside faces and chamfered edges.

4 Cut biscuit slots in the frame pieces and the panel [**Exploded View**]. Dry-assemble the pieces to ensure the joints fit tightly.

5 Using biscuits to keep the pieces aligned, glue and clamp the frame-and-panel assembly [**Photo B**].

6 Cut the cleats (G) to size and bevel-rip one edge. Glue one of the cleats to the underside of the frame top (F) flush with the back edge [**Drawing 2**]. Set the other cleat aside for now. Finish-sand the outside of the frame.

7 Screw the panel assembly to the base assembly with the ends and front flush. Apply a finish to the entire headboard. (We used a satin-sheen lacquer.)

8 Retrieve the extra cleat and position it on the wall so with the headboard mounted over the cleat, the legs touch the floor. Screw the cleat to the wall.

9 Move your bed in position in front of the headboard and look forward to a good night's sleep.

Tip! *Use double-faced tape to temporarily attach the cleat to the wall while determining the ideal mounting height.*

Produced by **Vince Ancona** with **Kevin Boyle** and **Brian Bergstrom**
Project design: **Kevin Boyle**
Illustrations: **Roxanne LeMoine, Lorna Johnson**

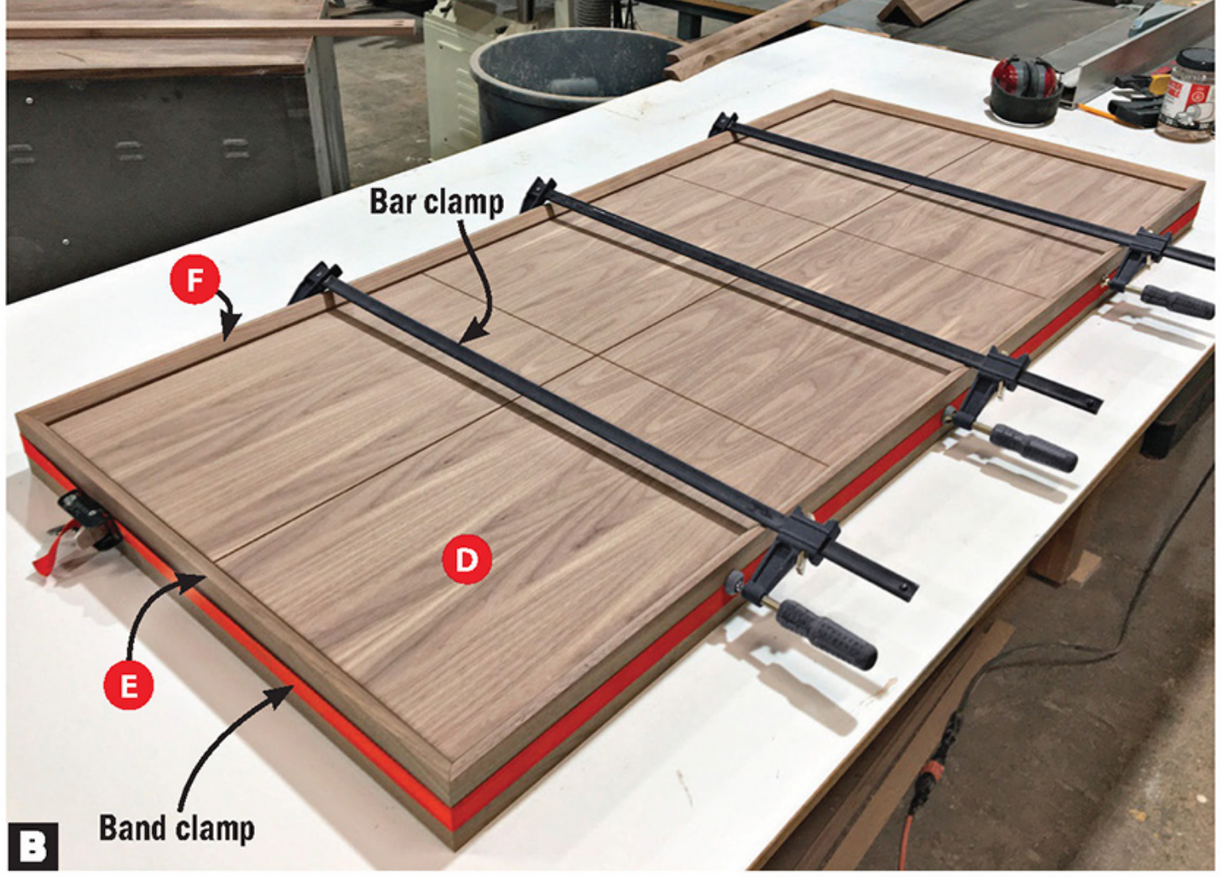

Apply a band clamp and as many bar clamps as necessary to close the beveled corners and pull the frame tight to the panel.

2 PANEL SECTION VIEW

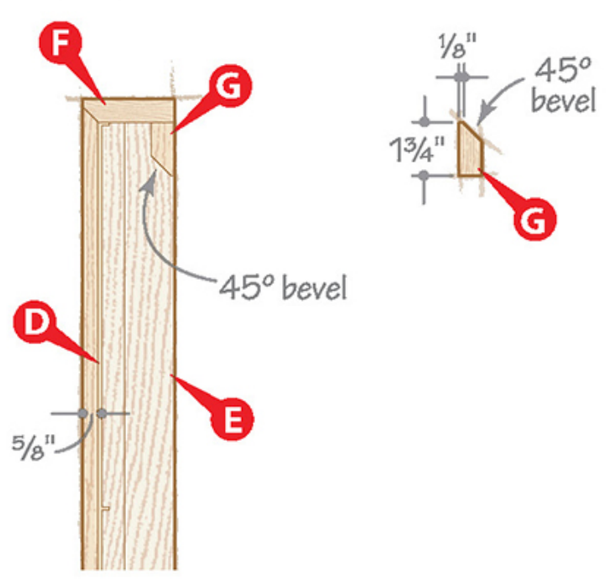

Cutting Diagram

This project requires 12 board feet of 4/4 walnut.

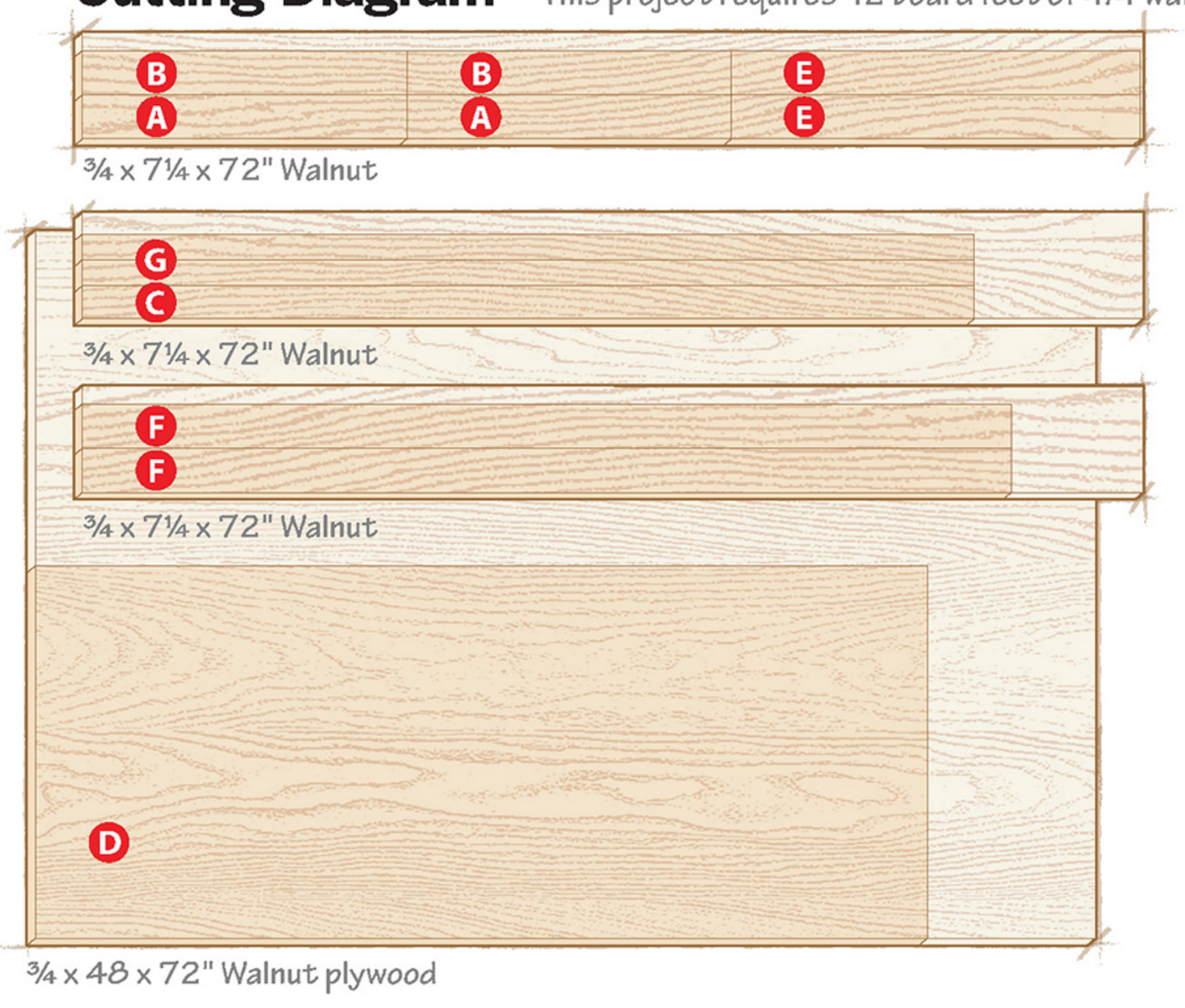

Materials List

Part		FINISHED SIZE T	W	L	Matl.	Qty.
A	leg sides	¾"	3"	22"	W	2
B	leg fronts	¾"	3"	22"	W	2
C	rail	¾"	2¼"	60½"	W	1
D	panel	¾"	25¼"	60½"	WP	1
E*	frame ends	¾"	3"	26¾"	W	2
F*	frame top/bottom	¾"	3"	62"	W	2
G	cleats	¾"	1¾"	60½"	W	2

*Parts initially cut oversize. See the instructions.
Materials key: W-walnut, WP-walnut plywood.
Supplies: #20 biscuits, #8×3" flathead screws.
Bit: 45° chamfer bit.
Opening photo: Better Homes & Gardens, 28" Black Metal Round Mirror, $58.00; Claren Planter, 10" $14.97, 12" $19.97, or 15" $26.97; Colton Bench, $104.00; Faux Leather and Linen Reversible Pillow, $14.88. Find these items exclusively at Walmart stores or walmart.com.

I USE A WAGNER MOISTURE METER BECAUSE:

I care about my work



80% of all problems in wood projects are caused by moisture content issues. A quick and simple, non-damaging moisture meter reading can save you from angry customer calls, unnecessary repair time, and a bad reputation. Call today and learn why Wagner's industry-leading Orion meters may just be the most important tool for your shop.



800-795-9916 | WagnerMeters.com

FOR THE LOVE OF WOOD



Natural Edge Walnut Dining Table Milled and Made by Rickey Coffey, Alabama, USA.

SAW YOUR OWN LOGS INTO LUMBER



***NEW** 2021 Product Brochure!*

15 Sawmill Models
starting with the LX25 at $3,295*

LiVE the wood life™



© 2021 Wood-Mizer LLC
*Price subject to change without notice.

BUILT IN THE USA

866.366.0546 | woodmizer.com

Wood-Mizer
from forest to final form®

Nuclear-age Nightstand

This bedside table combines functionality with midcentury style.

DIMENSIONS:
19" W × 22" D × 26" H

Approximate materials cost:
$300
Lumber and hardware

80 million
Bibles placed in hotel nightstands each year

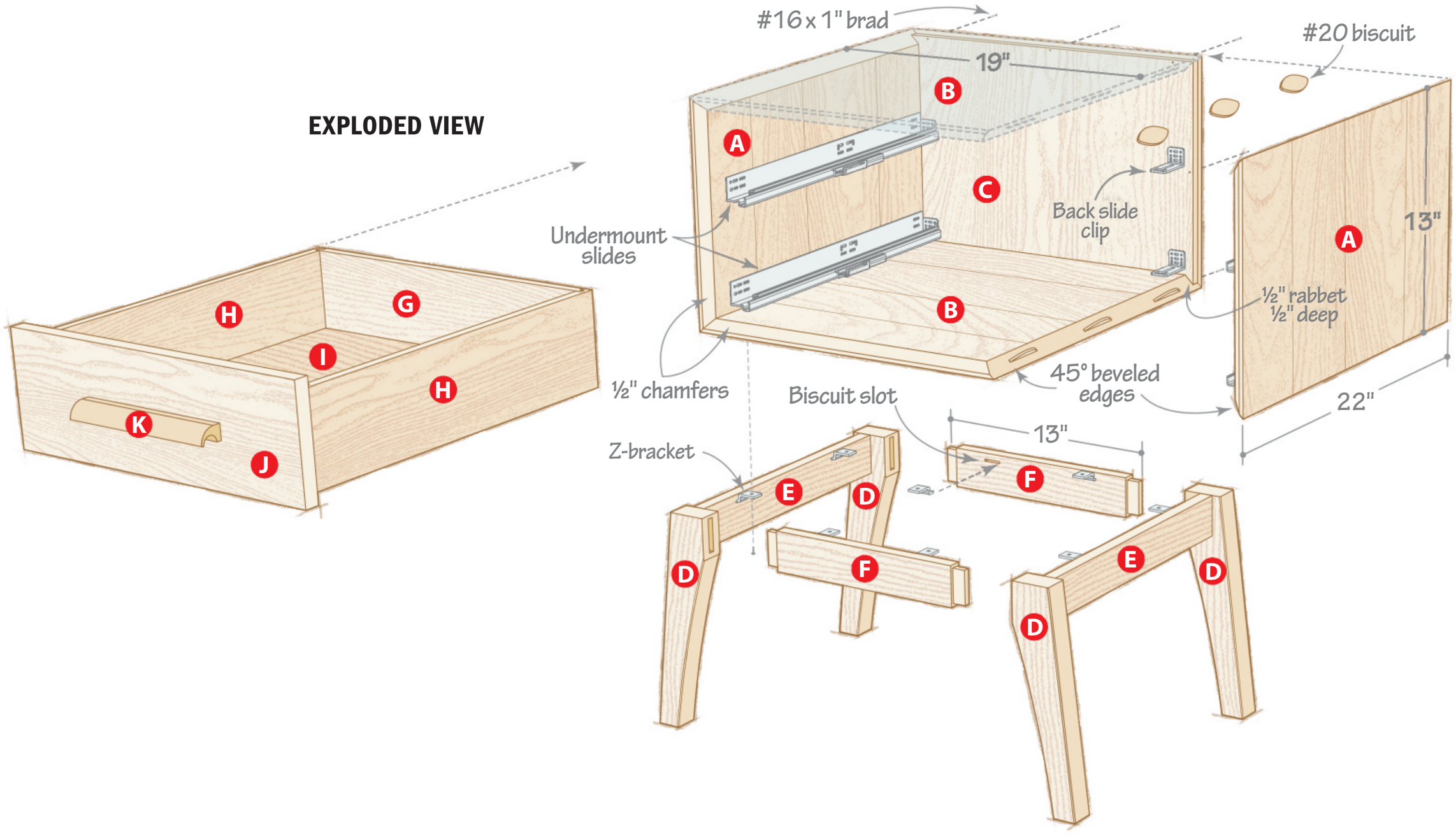

Not too long ago, nightstands provided a convenient spot to set a book or an alarm clock. Today, you're more likely to find a cell phone and charger, but the need for the nightstand remains. Build this version, or a pair of them, to round out your bedroom suite.

If you've already completed the dresser from issue 276 (September 2021), you may experience a case of *déjà vu* when building this nightstand. The two projects share much of the same DNA. And they both complement the headboard you'll also find in this issue.

Go with the flow

1 To get a continuous grain pattern along both sides (A) and the top (B), glue up a 22×68" panel for these parts from ¾" stock.

2 Lay out the sides and top at one end of the panel, with the top between the two sides. Bevel-cut parts in the following order: the top to finished length; the just-cut ends of the sides, removing as little material as possible; and then the opposite ends of the sides to length [**Materials List, Exploded View**]. From the remainder of the panel, bevel-cut the bottom (B) to match the length of the top.

3 Cut biscuit slots in the miters [**Exploded View**]. Rabbet the back edges of the parts and chamfer the front edges. Finish-sand the inside faces.

4 Glue and clamp the case together, using biscuits to align the pieces [**Photo A**]. From ½" plywood, cut a panel for the back (C) and set it aside.

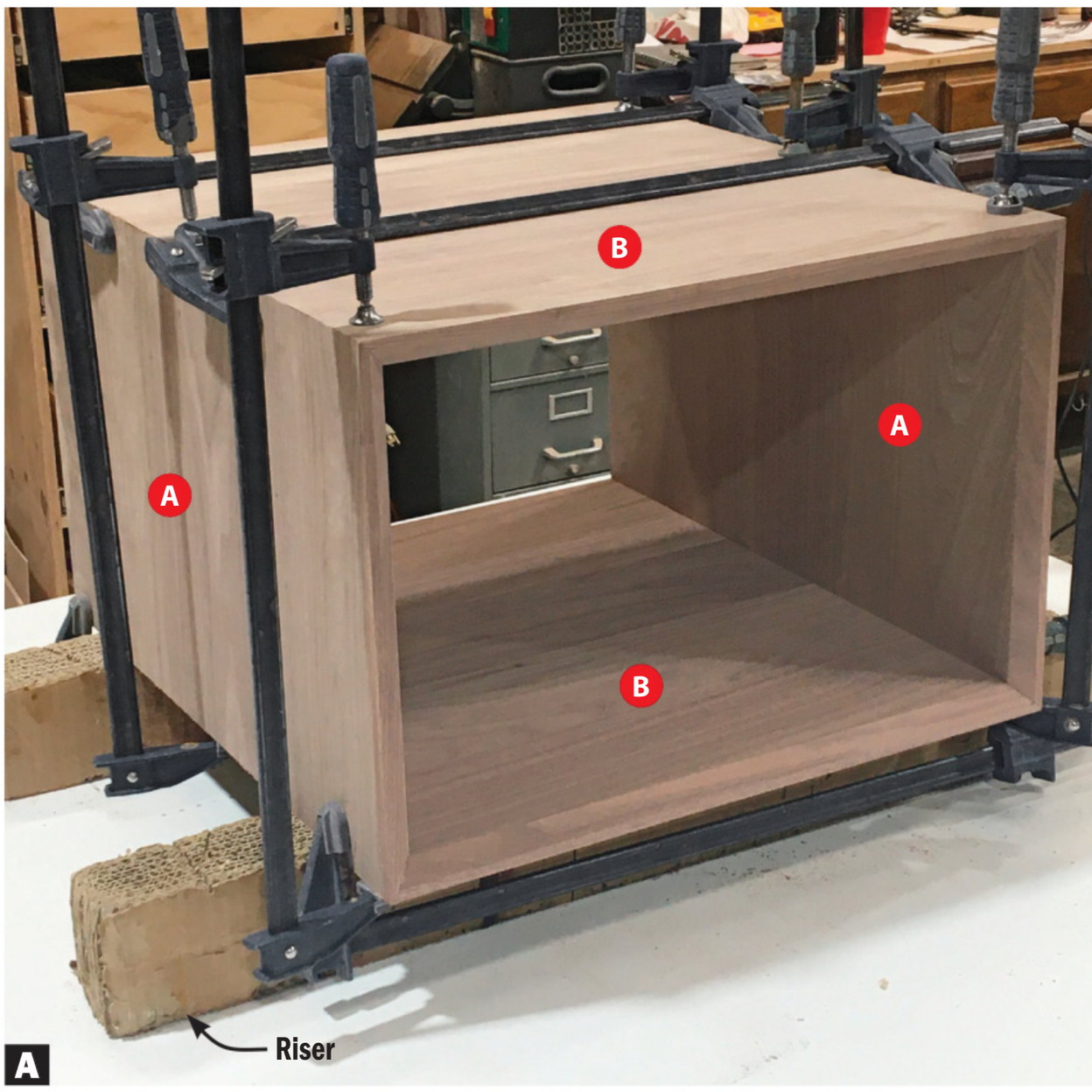

Place the case on risers to provide clearance for the clamps during assembly.

Give it a solid footing

1 Cut to size the blanks for the legs (D) [**Materials List, Drawing 1**]. Mark the location of each leg on top of the blanks, then form the mortises [**Drawing 1a**].

2 Make a hardboard template of the leg profile [**Drawing 1b**] and trace the profile onto each leg blank. Bandsaw the curves and sand them smooth. Soften the edges by sanding a slight round-over and finish-sand the surfaces.

3 From ¾" stock, cut the stretchers (E, F) to size. Cut tenons on their ends [**Drawing 1c**] and biscuit slots on the inside face of each stretcher for the Z-brackets [**Exploded View, Drawing 1**].

4 Finish-sand the stretchers and glue up the base [**Photo B**].

Tip! *Save the waste pieces from cutting the legs to use as clamping blocks during assembly.*

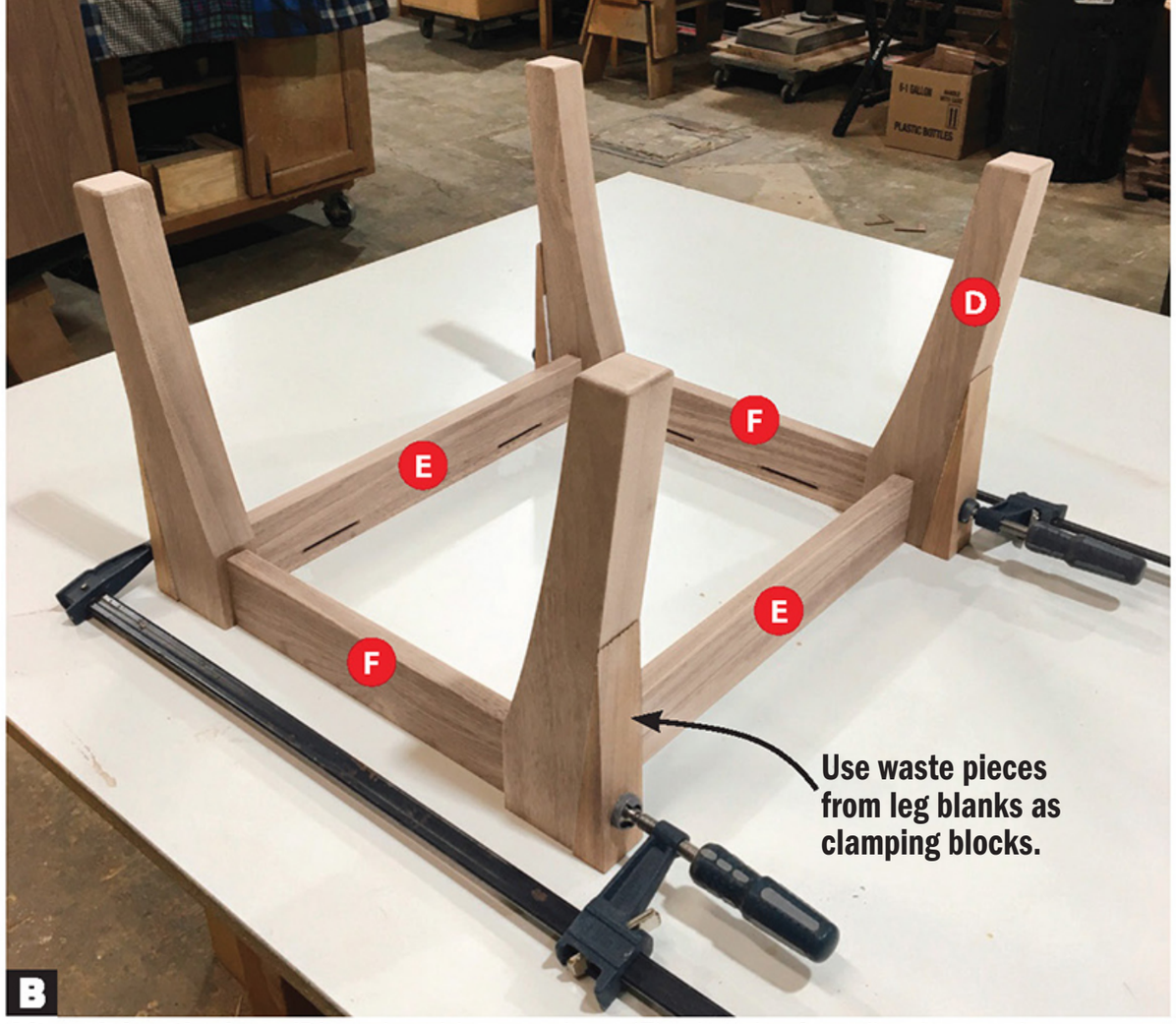

After gluing the legs (D) to the side stretchers (E), glue the front/back stretchers (F) between the two assemblies.

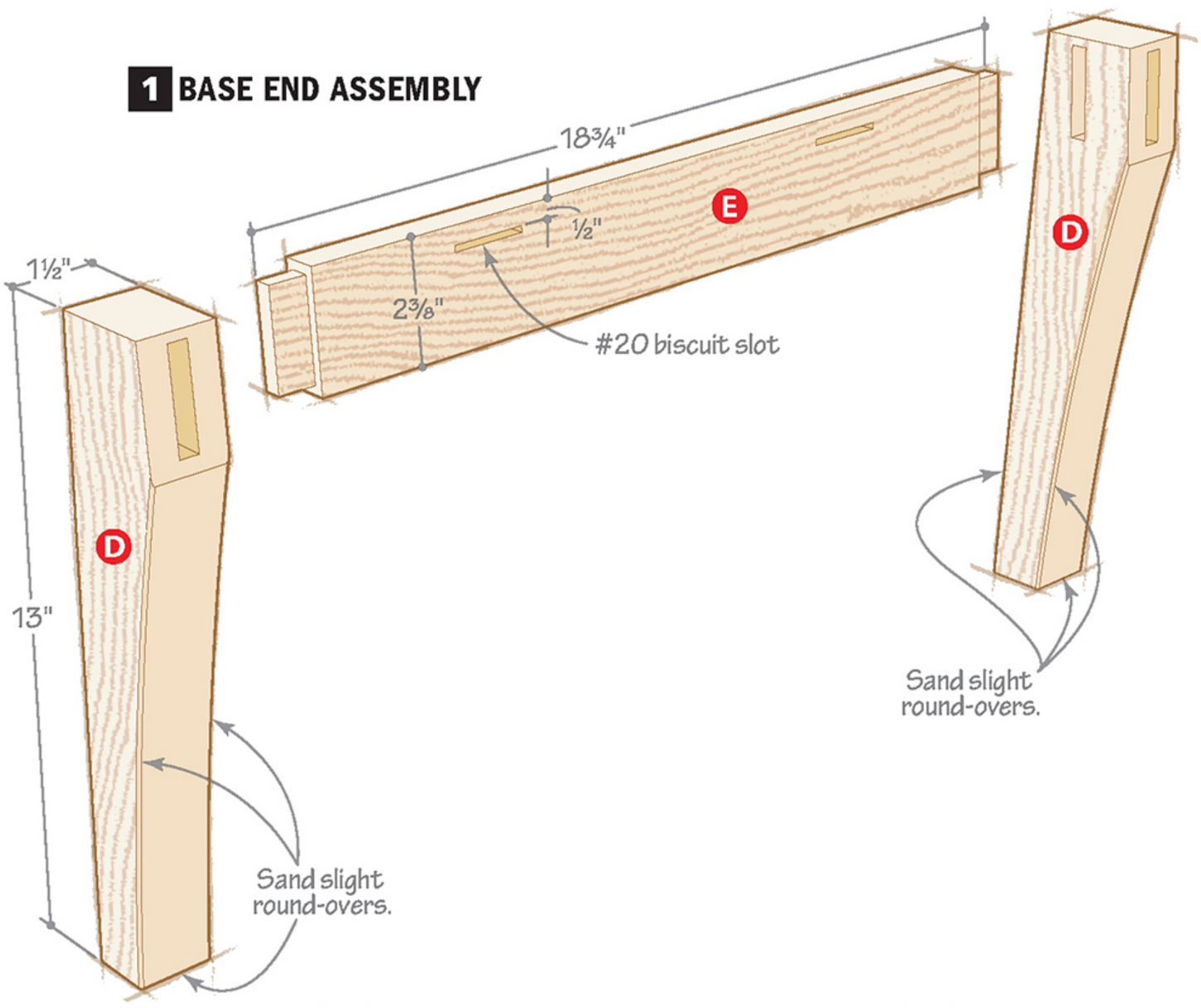

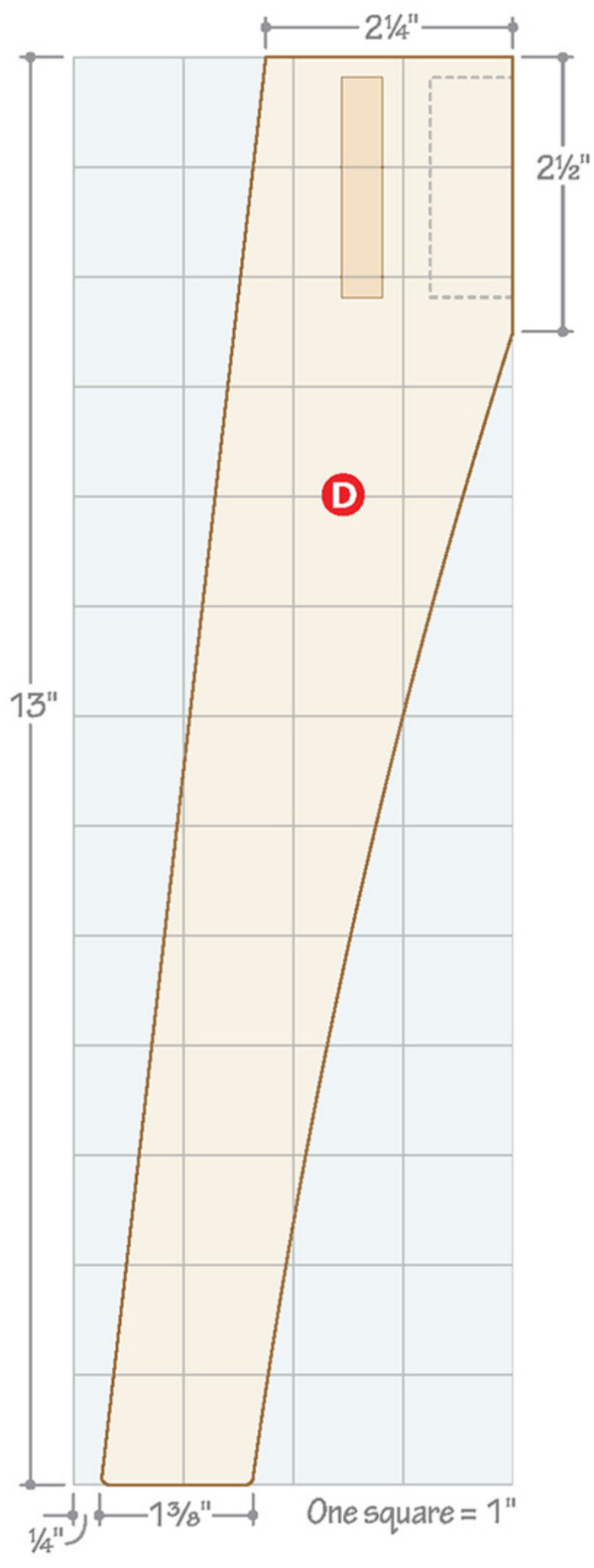

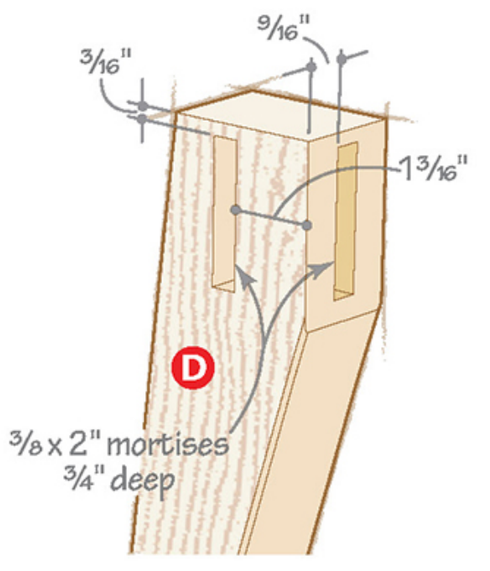

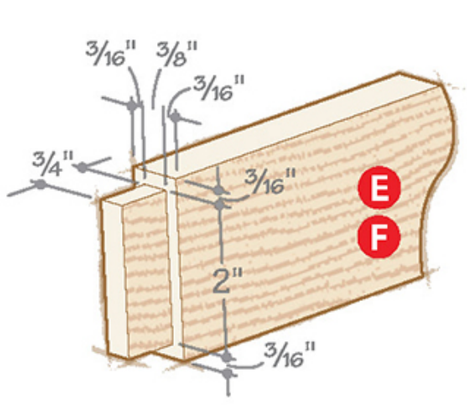

Add some storage

1 Cut to size the drawer fronts, backs, and sides (G, H). Cut dadoes near the ends of the sides [**Drawing 2**]. Rabbet the ends of the front and back to form tongues that fit in the dadoes.

2 Groove the inside face of the drawer parts for the drawer bottom (I) [**Drawing 2**]. Cut the drawer bottoms to size.

3 Finish-sand the inside faces of the drawer parts and glue up the drawers, checking for square. Set them aside to dry.

4 With the glue dry, use a handsaw and chisel to notch the drawer backs for the drawer slides [**Drawing 2a**]. Drill locating holes in the backs for the slides. Finish-sand the outside of the drawer boxes.

5 Cut to size the false fronts (J). Finish-sand these and set them aside. Make the drawer pulls (K) [**Do the drawer pull two-step**].

2 DRAWER

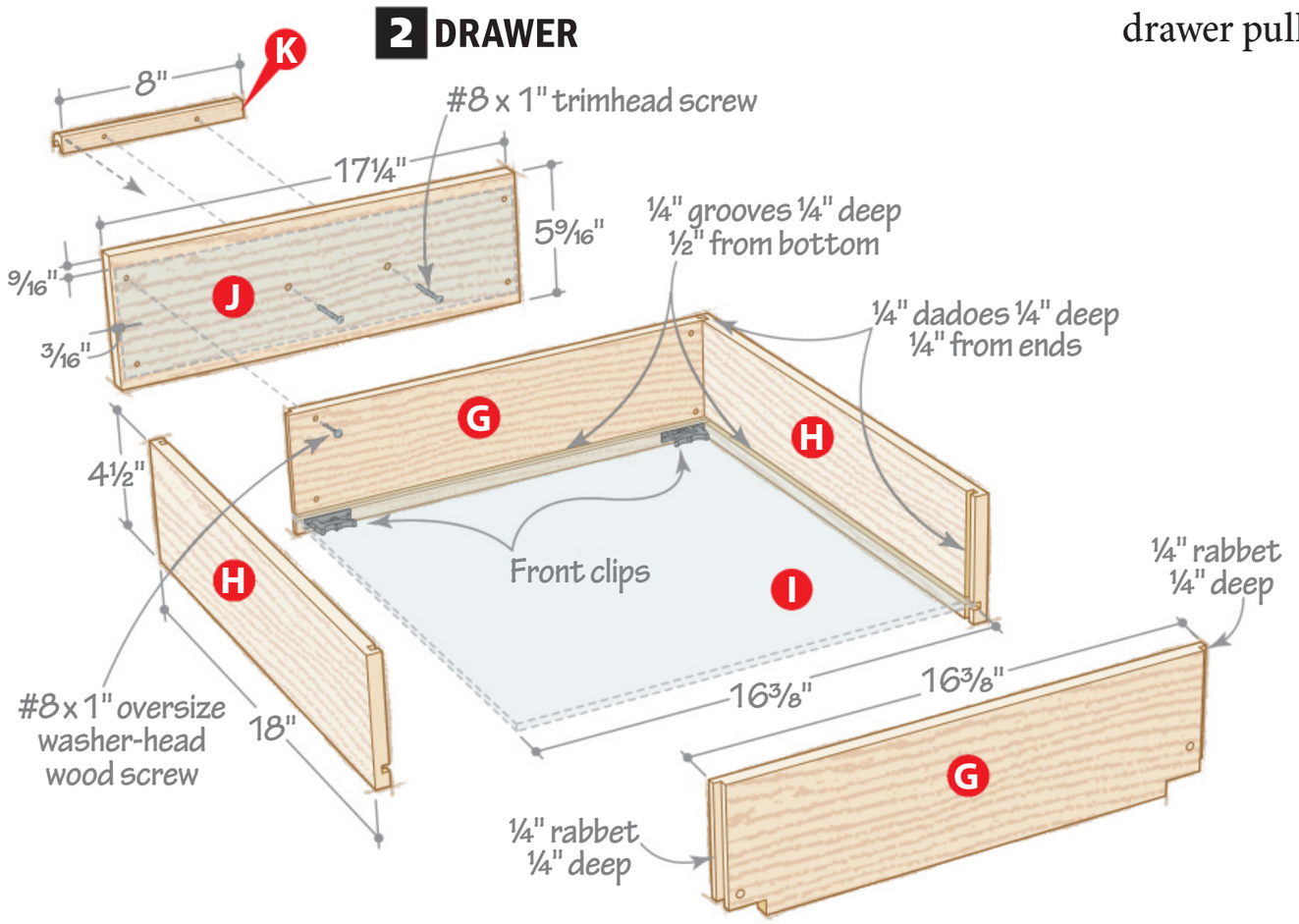

2a DRAWER BACK DETAIL

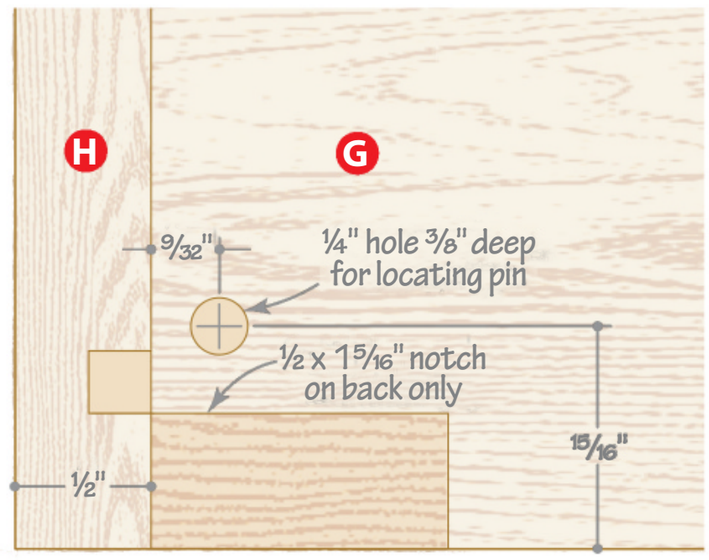

Do the drawer pull two-step

Sashay your way to custom drawer pulls using just two common router bits. Start by cutting a ¾ × 2⅜ × 12½" blank. Rout a pair of flutes in the blank using a core-box bit [**Photo C**]. After swapping the core-box bit for a ¾" round-over bit, rout the opposite edges of the blank [**Photo D**]. Rip the blank into two equal-width pulls and finish-sand all the surfaces, sanding a slight round-over on the front edges of the pulls.

DRAWER PULL DETAIL

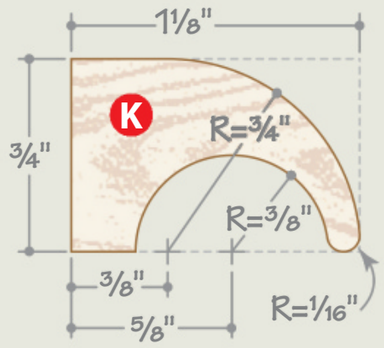

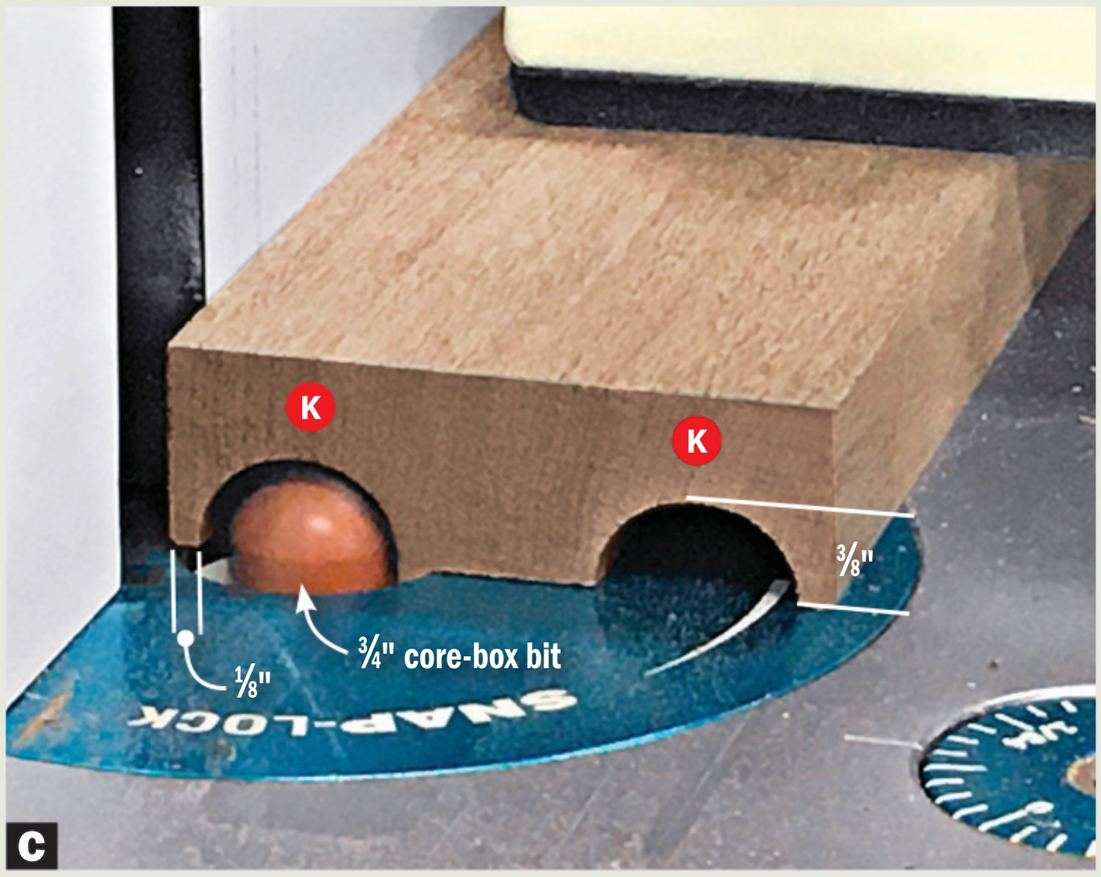

Rout a flute near each edge of the drawer-pull blank.

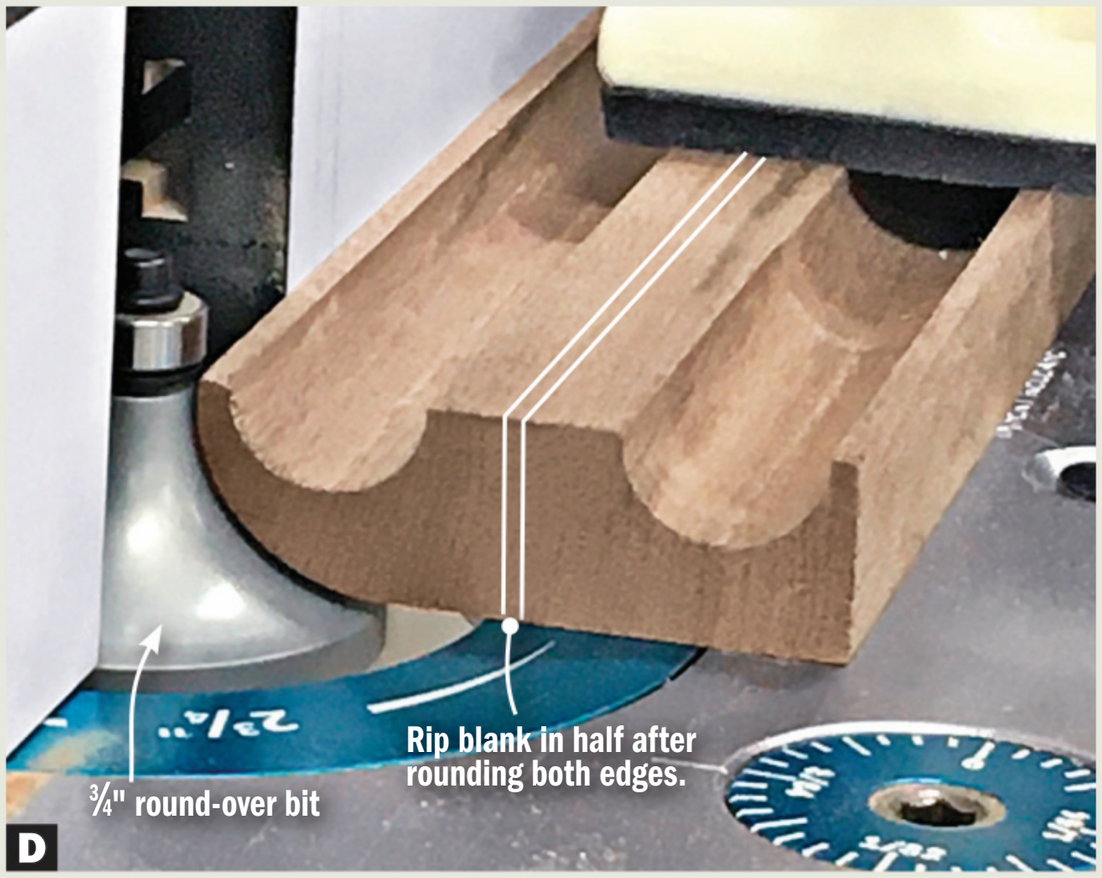

Flip the blank over and round over both edges.

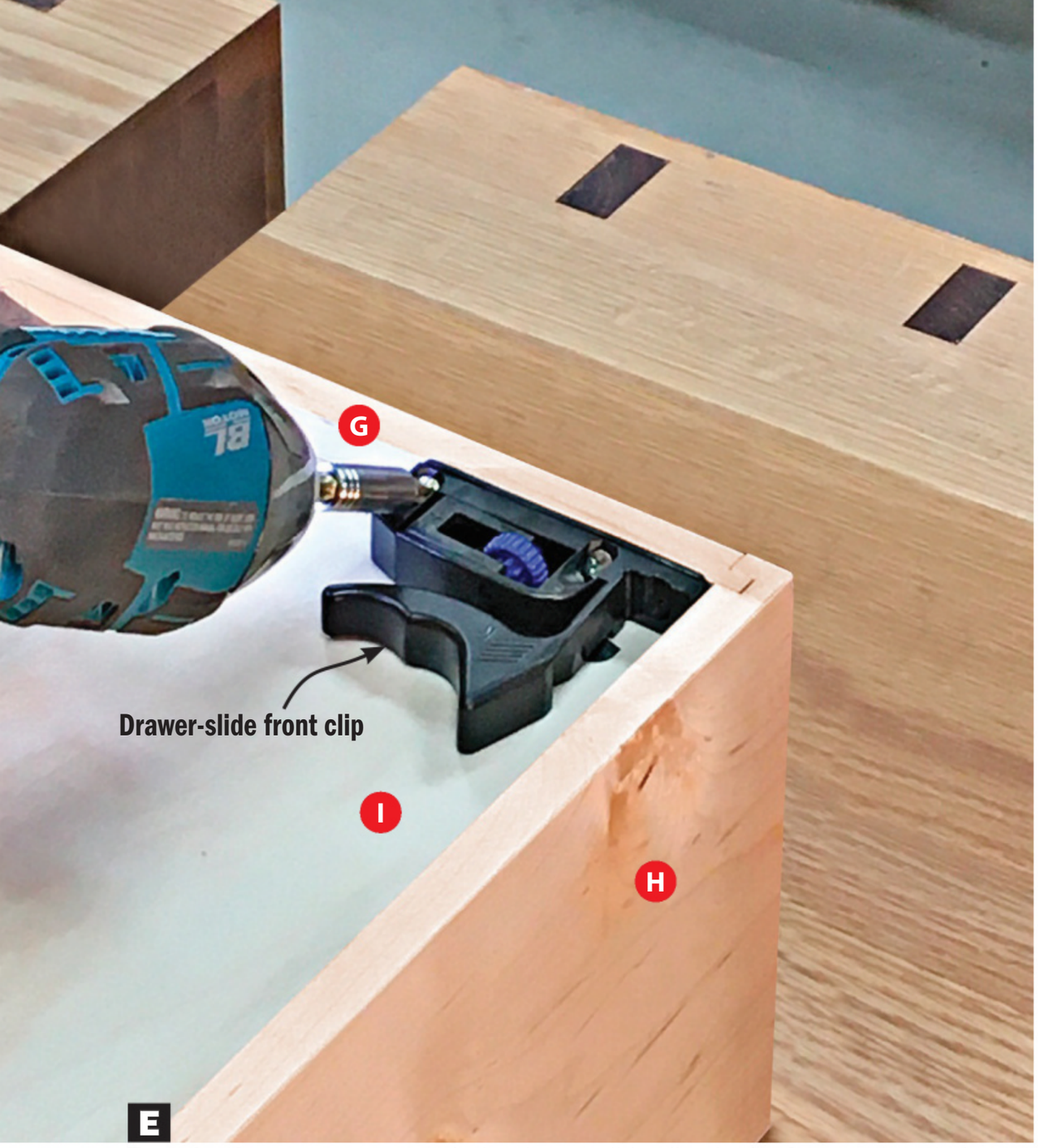

Turn the drawer over to attach the drawer-slide clips in the front corners below the drawer bottom.



Trim the protruding edge of the rear clips by standing them on end on the bandsaw.

Bring it all together

1 Apply a finish to all the parts and assemblies. (We sprayed on a satin-sheen lacquer.)

2 Attach the base to the bottom of the case with Z-brackets [**Exploded View**]. Retrieve the back (C) and secure it to the case with brads.

3 Attach the front clips for the drawer slides to the bottom of the drawer boxes [**Photo E**].

4 To allow the drawer slides to fit flush against the sides of the case, bandsaw away part of the rear clips [**Photo F**]. Trim two each of left- and right-side brackets.

5 Insert the rear clips onto the drawer slides and screw the slides to the case, starting with the upper drawer [**Exploded View, Photo G**]. The slides for the lower drawer rest on the bottom of the case.

6 Center the pulls on the false fronts and drive trimhead screws into the pulls from the back.

7 Install the drawers in the case and the false fronts on the drawers [**Photo H**]. Drive screws into the false fronts from inside the drawers.

8 Move the nightstand into position next to the bed. It's time to put this project to rest.

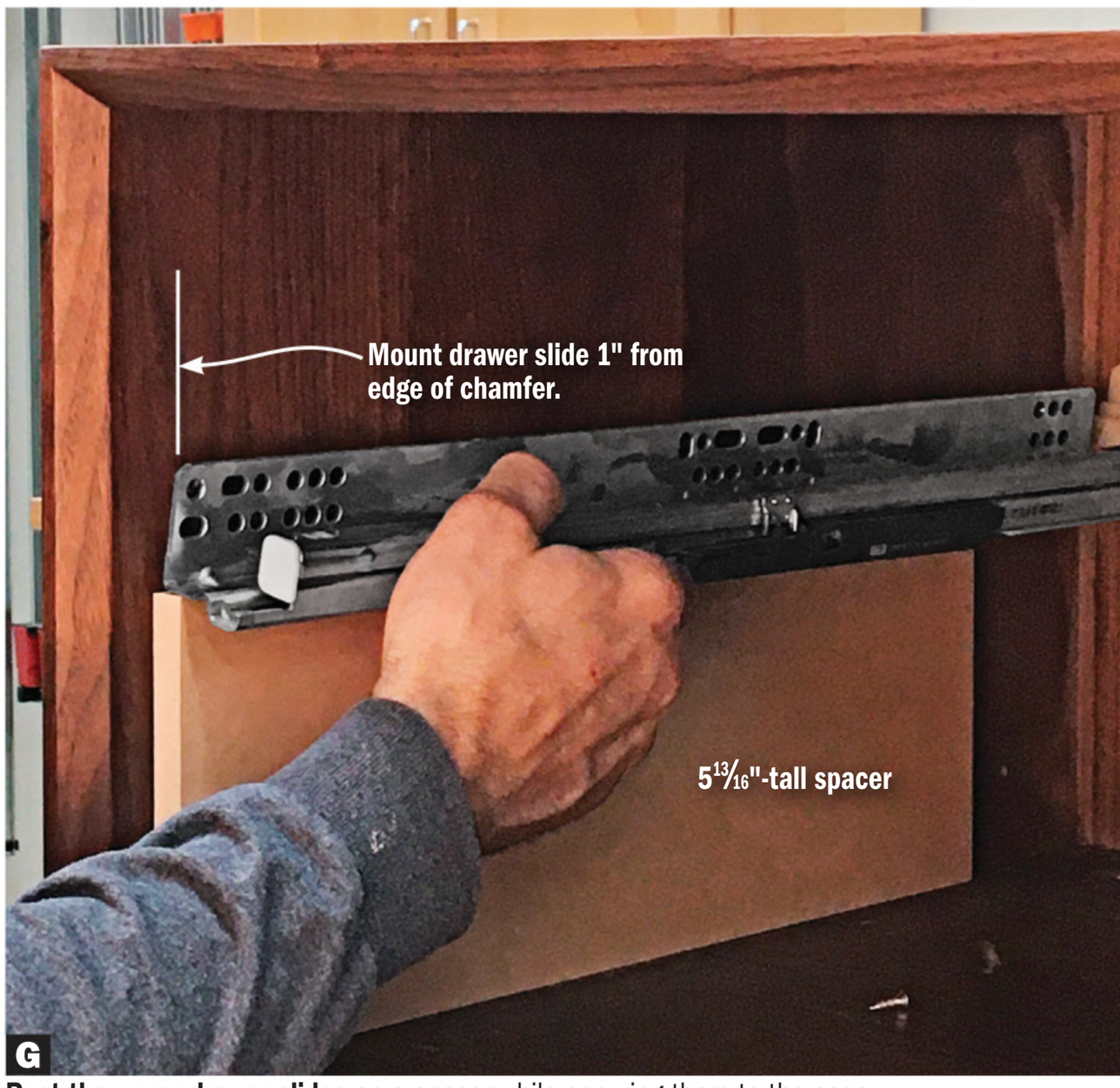

Rest the upper drawer slides on a spacer while securing them to the case.



Apply double-faced tape to the front of the drawer box. Rest each false front on spacers and press them against the drawers.

Materials List

Part		FINISHED SIZE T	W	L	Matl.	Qty.
A*	case sides	¾"	22"	13"	W	2
B*	case top/bottom	¾"	22"	19"	W	2
C	case back	½"	18½"	12½"	WP	1
D	legs	1½"	3¾"	13"	W	4
E	side stretchers	¾"	2⅜"	18¾"	W	2
F	front/back stretchers	¾"	2⅜"	13"	W	2
G	drawer fronts/backs	½"	4½"	16⅜"	M	4
H	drawer sides	½"	4½"	18"	M	4
I	drawer bottoms	¼"	17½"	16⅜"	MP	2
J	drawer false fronts	¾"	5⁹⁄₁₆"	17¼"	W	2
K*	drawer pulls	¾"	1⅛"	8"	W	2

*Parts initially cut oversize. See the instructions.

Materials key: W-walnut, WP-walnut plywood, M-maple, MP-maple plywood.

Supplies: #20 biscuits, #16×1" brads, #8×1" oversize washer-head screws, #8×1" trimhead screws.

Blade and bits: Dado set, 45° chamfer bit, ¾" core-box bit, ¾" round-over bit.

Source: Tabletop fasteners (8) no. KV0324 STL, $0.64; 18" drawer slides (2 pr.) no. HT9134339, $19.89; front clips (4) no. HT9140416, $2.02; plastic rear brackets (4) no. HT1135181, $1.87, Woodworker's Hardware, wwhardware.com.

Produced by **Vince Ancona** with **Kevin Boyle** and **Brian Bergstrom**
Project design: **Kevin Boyle**
Illustrations: **Roxanne LeMoine, Lorna Johnson**

Cutting Diagram

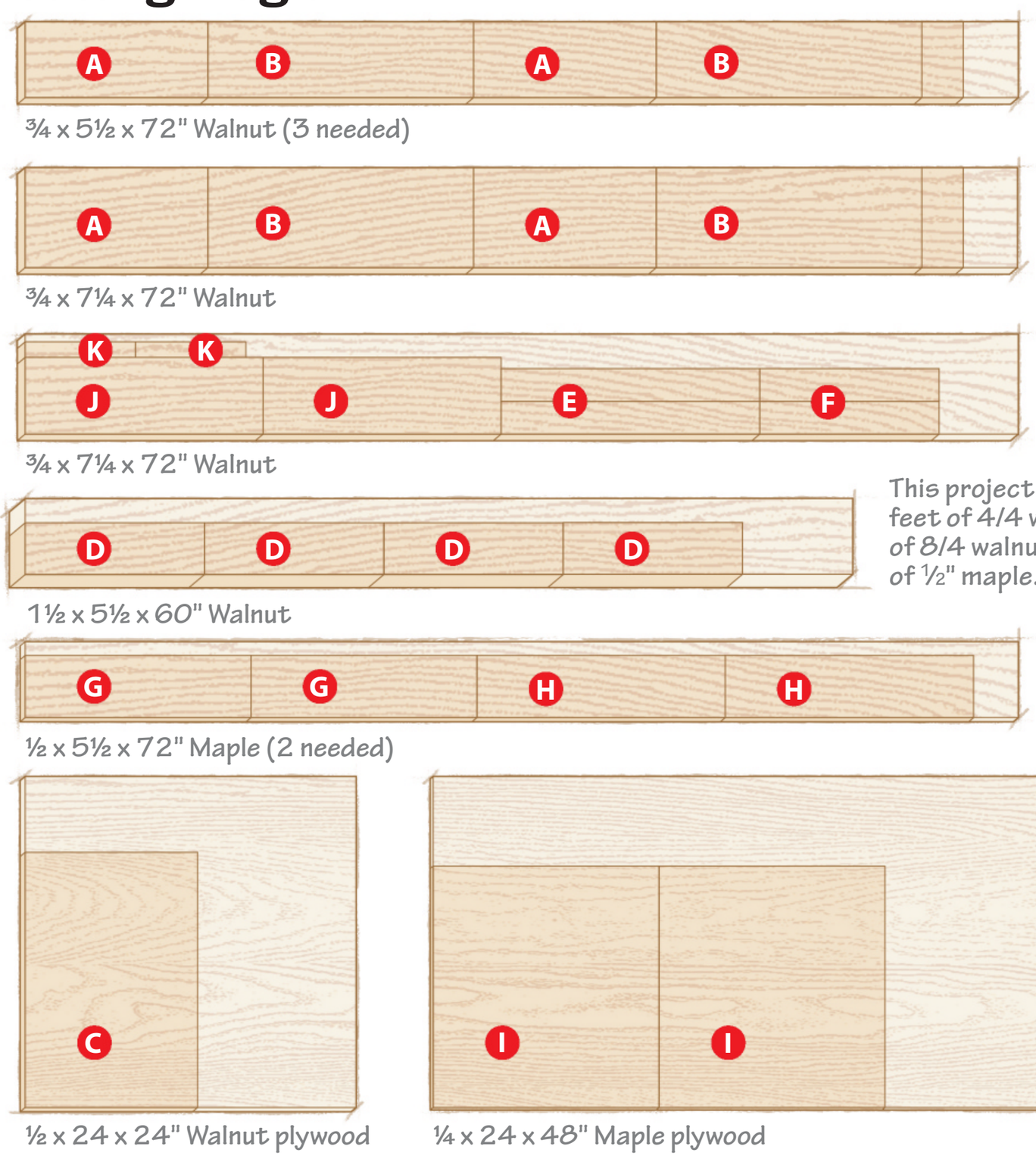

This project requires 17 board feet of 4/4 walnut, 5 board feet of 8/4 walnut, and 6 square feet of ½" maple.

Best Bang-For-The-Buck Tools

These woodworking products outperform their price tags.

According to the old adage, "When you buy an expensive tool, you only cry once, but a cheap tool will make you cry every time you use it." Well, whoever first uttered that axiom never got their hands on these top-value tools and accessories—hand-picked by the *WOOD*® magazine editors—that perform so well you'll do far more buying than crying.

Skil Sidewinder 7¼" circular saw

no. SPT67WM-22, $90

Where to buy: Acme Tools, 877-345-2263, acmetools.com

Priced in the middle of the pack for corded sidewinder-style circular saws, this saw cuts with impressive power, provides great sightlines whether used right- or left-handed, and handles and adjusts well despite its nearly 11-pound weight.

Portable and prudent



DeWalt 5" random orbit sander

no. DWE6423K, $70

Where to buy: Lowes, 800-445-6937, lowes.com

Sanding aggressiveness can often be the enemy of a high-quality final finish, which is usually more important. This dependable sander might not be as aggressive as some, but it delivers smooth, scratch-free surfaces without excessive vibration. It's good at collecting dust, especially when connected to a shop vacuum—its port provides mounts for two common sizes of vacuum hoses, a feature not found on most sanders. Plus, you get a 3-year warranty.



Ryobi 18-volt drill/driver

no. P215K, $79

Where to buy: Home Depot, 800-466-3337, homedepot.com

It many not have the bells and whistles of costlier cordless drills, but the P215K simply gets the job done with enough torque and runtime to handle almost any workshop task. To keep this drill affordable, Ryobi sells it with only one 1.5-amp-hour battery pack and a basic charger (no storage case or bag). But, any Ryobi 18-volt battery pack will work with this drill; you can add one for as little as $50. And even at this price, you still get a 3-year warranty.



Metabo HPT midsize router combo kit

no. KM12VC, $200

Where to buy: Acme Tools, 877-345-2263, acmetools.com

For about what you'd spend on a typical mid-size fixed- and plunge-base 2¼-hp router combo, this kit—a good all-around performer, with ¼" and ½" collets—also comes with three interchangeable subbases, a guide-bushing adapter, seven guide bushings, a centering pin, and a plastic case that holds it all. Need a little peace of mind? The 5-year warranty ranks best among routers.

Modest-priced machines

Ridgid benchtop belt/spindle sander

no. EB4424, $300

Ridgid, 866-539-1710, ridgidpowertools.com



Most combination tools compromise performance for mutifunctionality, but the EB4424 combo sander defies that axiom by excelling as both a spindle sander and belt sander. It comes with a 4×24" 100-grit belt and spindles in ½", ¾", 1", 1½", and 2" diameters with 80-grit abrasive sleeves. Changing from one mode to the other takes less than a minute.





Grizzly 14" bandsaw

no. G0555, $700

Where to buy: Grizzly Industrial, 800-523-4777, grizzly.com

This saw, though priced near the bottom of the 14" bandsaw category, routinely outperforms models selling for higher prices. Its ball-bearing blade guides hold blades steady for excellent curve cutting, and the 1-hp motor provides sufficient power. It comes with a rip fence and miter gauge. An optional riser block kit (no. H3051, $111) extends its resaw capacity from 6" to 12".

Delta contractor tablesaw

no. 36-725T2, $649

Where to buy: Lowes, 800-445-6937, lowes.com

Affordable enough to be your first floor-standing tablesaw, the 36-725T2 packs enough power and precision to be your last. With a respectable-power induction motor, cast-iron top, reliable rip fence, quality miter gauge, good dust collection, and built-in casters for easy mobility, the 5-year warranty is just icing on the cake.



Grizzly 1-hp dust collector

no. G8027, $280

Where to buy: Grizzly Industrial, 800-523-4777, grizzly.com

We may all dream of a ducted dust-collection system, but in reality, most of us really only need a more affordable portable single-stage collector we can wheel from machine to machine as needed. The G8027 produces sufficient airflow to suck dust and chips effectively from almost any machine when connected with 10' or less of flexible hose. And its 2.5-micron filter bag traps nearly all dust, even the fine stuff. At this price, you can buy a second one to minimize hooking and unhooking a single one, and you still won't break your tool fund.



Benchwork on a budget



Irwin Marples bench chisel set

no. M444SB6N, $70

Where to buy: Lowes, 800-445-6937, lowes.com

You could save money by buying chisels one at a time as you need them. Or you could pick up this boxed six-piece Irwin kit with widths of ¼", ⅜", ½", ⅝", ¾", and 1" and be done with it. The carbon-steel blades sharpen easily, and the plastic handles grip well enough you'll get along nicely.



Veritas gent's saws, $107

pair of gent's saws, no. 05T1008

rip saw, 20 tpi, no. 05T1001

crosscut saw, 22 tpi, no. 05T1005

Where to buy: Lee Vallley, 800-871-8158, leevalley.com

For quick, clean, and quiet cuts, these affordable, sharp saws work great for cutting joinery and other precision cutting tasks. Each is a steal at $59, but save even more buying them by the pair.



WoodRiver 7" bench vise

no. 162794, $155

Where to buy: Woodcraft, 800-225-1153, woodcraft.com

Rather than spend hundreds on a fancy vise that takes hours (or days!) to install, this WoodRiver vise simply bolts to your workbench and should handle 80 percent of your workholding chores without breaking your budget. It opens to 7¾", and with quick-release jaws, you won't have to spin the handle all the way; you add the wood jaw faces.



Lie-Nielsen low-angle block plane

no. 1-102, $140

Where to buy: Lie-Nielsen, 800-327-2520, lie-nielsen.com

You can't beat a low-angle block plane when you need to trim or shave a little off a workpiece, and this U.S.-made model performs so well you'll kick yourself for not getting one sooner. Yes, you will find cheaper block planes, but you won't find one that performs as well or needs as little setup work to use, and a fussy plane might make you want to give up hand-tool work. The hardened-steel blade stays sharp for a long time, and the adjuster helps you easily fine-tune the cutting depth.

Affordable accessories



Incra miter gauge

no. V120, $90

Where to buy: Incra Precision Tools, 972-242-9975, incra.com

Some tablesaw blades cost more than this miter gauge, but even the best blade can't produce accurate crosscuts unless you hold workpieces at precise angles. Replace your underperforming miter gauge with this Incra model that features 120 laser-cut notches for precise angles in 1° increments plus a 22.5° setting on each side. The miter-bar adjusters let you tweak the fit in your saw's miter slot, and you can easily attach an auxiliary fence for better workpiece support and tear-out protection.





Oshlun stacked dado set

6", no. SDS-0630, $91; 8", no. SDS-0842, $120

Where to buy: Rockler, 800-279-4441, rockler.com

For a little more than the cost of a low-end dado set, Oshlun's 6" 30-tooth outer blades and five-tooth full-body chippers (four ⅛", one 3⁄32", and one 1⁄16") deliver perfect smooth-bottom dadoes, grooves, and rabbets with no tear-out. It even comes with eight shims to help you dial in precise widths easily. The 8" set features 42-tooth outer blades and six-tooth chippers.

Nova Pro-Tek G3 4-jaw lathe chuck

direct-thread chuck, no. 48291, $150

spindle adapters $40

insert chuck, no. 48290, $140

all inserts $29

Where to buy: Rockler, 800-279-4441, rockler.com

Recommended for lathes with 10–16" of swing, the G3 chuck comes with one set of 50mm jaws, a screw center for mounting workpieces, and a T-handle wrench, with the ability to add different-size jaws (sold separately). The G3 sells in two versions. Although the direct-thread version fits 1" spindles (or a 1¼" or M33 spindle with the optional adapter), we recommend the insert version that requires you to buy a threaded insert to fit your lathe. With this one, you can upgrade to a larger lathe in the future without having to buy a new chuck. The 6-year warranty sweetens the deal even more.





Kreg pocket-hole jig

no. 320, $40

Where to buy: Kreg Tool, 800-447-8638, kregtool.com

Pocket-hole joinery adds mechanical strength to simple butt joints, without adding much time. This jig enables you to drill pockets in stock from ½" to 1½" thick with a positive stop for each thickness. Simple, accurate, and low out-of-pocket cost—that's hard to beat.

Norton waterstone sharpening kit

no. 298, $165

Where to buy: Peachtree Woodworking, 888-512-9069, ptreeusa.com

Hand tools need regular sharpening to maximize their usefulness. But most sharpening stones and machines can be as pricey as they are mysterious. We like this value-priced set of stones because it sharpens any chisel or plane iron to an ultrafine edge using two 3×8" double-sided stones (220/1,000 and 4,000/8,000). Plus, it comes with a flattening stone to true up the waterstones after they become dished from use. Each stone comes in a rugged plastic storage case.

▶ Build this sharpening station for your shop.
woodmagazine.com/sharpstation





Bench Dog Ultra Push Bloc

no. 42790, $10 each

Where to buy: Rockler, 800-279-4441, rockler.com

Better and safer than scrapwood blocks (and costing little more), these blocks have curiously strong-gripping rubber pads that seem impervious to dust. And the large handle makes them easy to grip for use on a jointer, bandsaw, or tablesaw.

Pittsburgh aluminum bar clamps

24" no. 60541, 38183, $11
36" no. 60539, 38184, $12
48" no. 60540, 38185, $15
60" no. 60594, 38225, $17

Where to buy: Harbor Freight, 800-444-3353, harborfreight.com

We'd all like more clamps, if we could afford them. With these low-cost models (priced less than half the cost of most other brands), you can afford to fill up a wall with clamps that will handle almost any assembly.

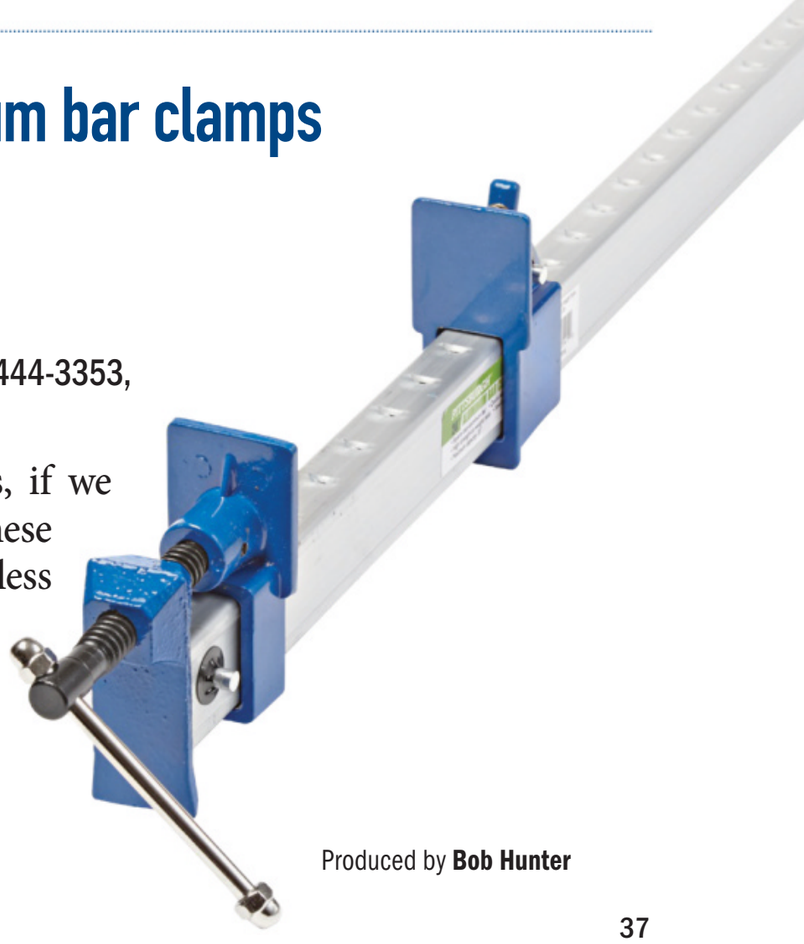

Produced by **Bob Hunter**

Rock 'n' Roll Maze Game

Try not to lose your marbles.

If your friends refuse to play any game lacking a joystick, challenge them to a speed run on this exciting maze game as you maneuver the ball from corner to corner, avoiding the pitfall holes.

The maze insert simply drops into the frame, so you can remove it and rotate it to change up gameplay, or build additional boards for endless options.



DIMENSIONS:
8½" W × 14½" D × 10¾" H

Approximate materials cost:
$50
Including hardware

14
holes to avoid as you navigate the maze

EXPLODED VIEW

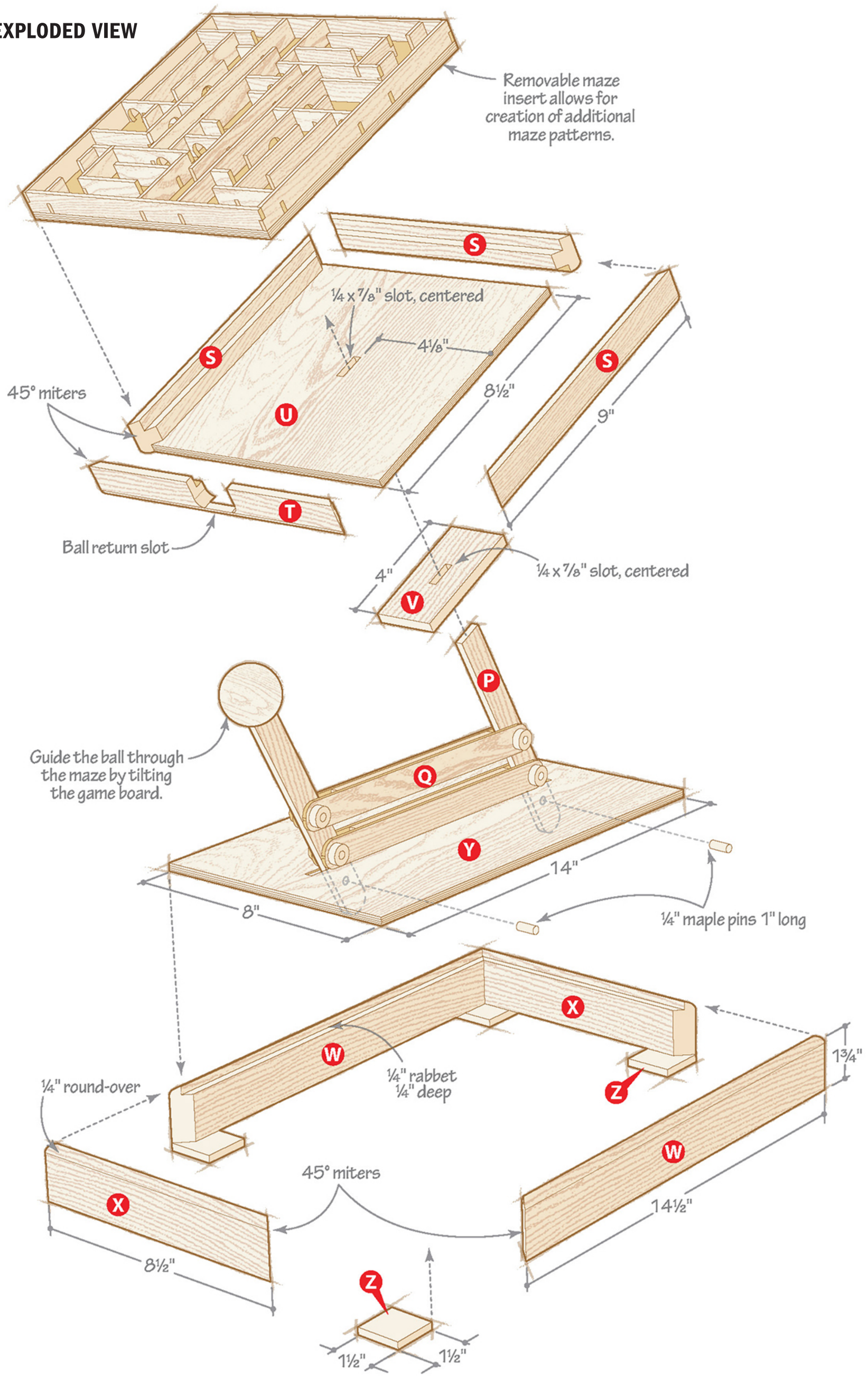

▶ Learn how to safely cut thin strips on a tablesaw. woodmagazine.com/thinrips

Make a maze

1 Cut to size the maze walls (A–N) [**Materials List**]. Notch the ends of the walls [**Photo A, Drawing 1**], then cut the center notches [**Photo B**].

2 Drill the doorway holes in parts F, G, J, and N [**Drawing 1, Photo C**].

3 Glue together the four outside walls (A), then the five interior subassemblies: BBCDDEFGH (×2), BIJKLL (×2), and BBMMNN (×1) [**Drawing 2, Skill Builder**].

1 MAZE WALLS

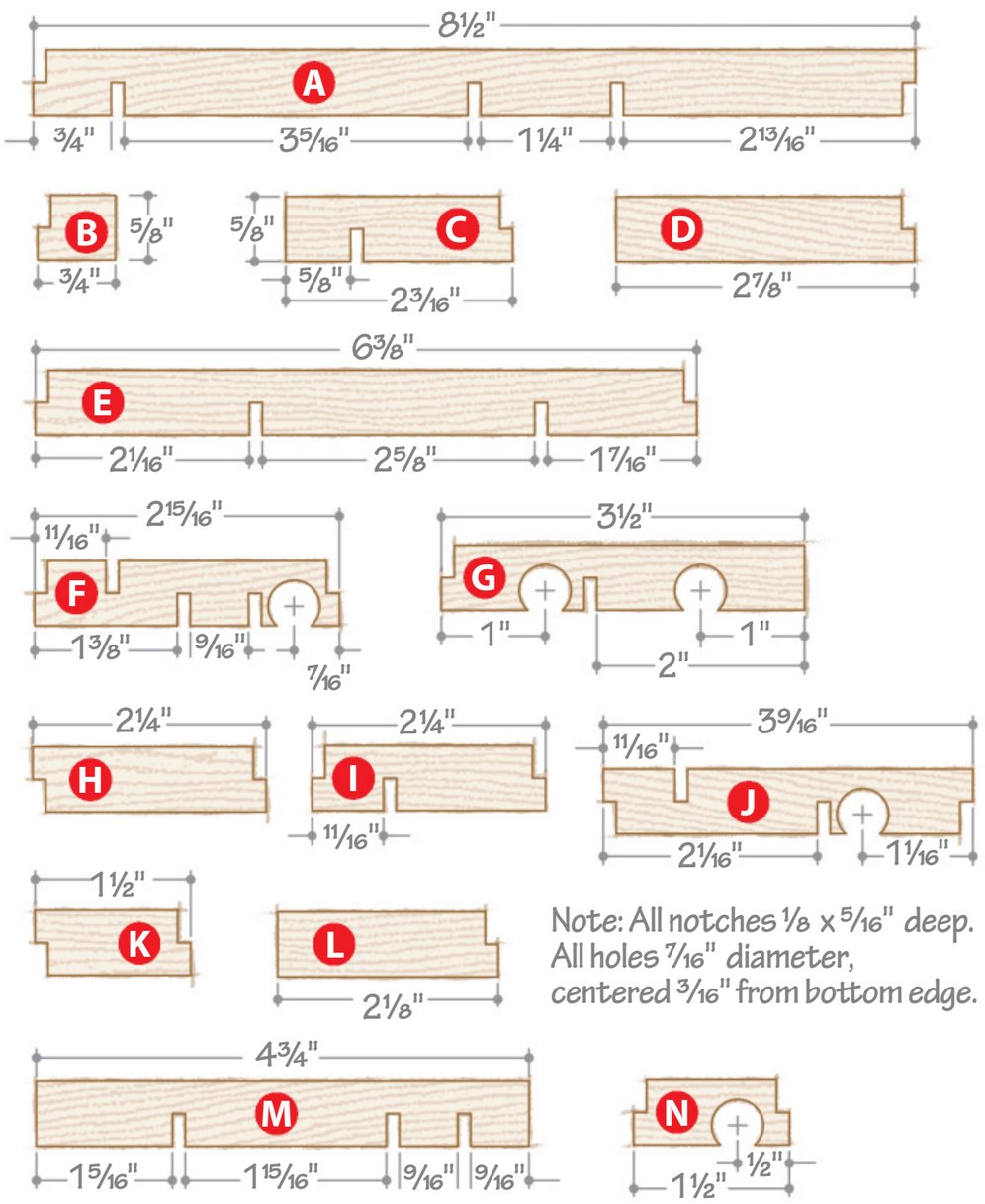

2 MAZE ASSEMBLY

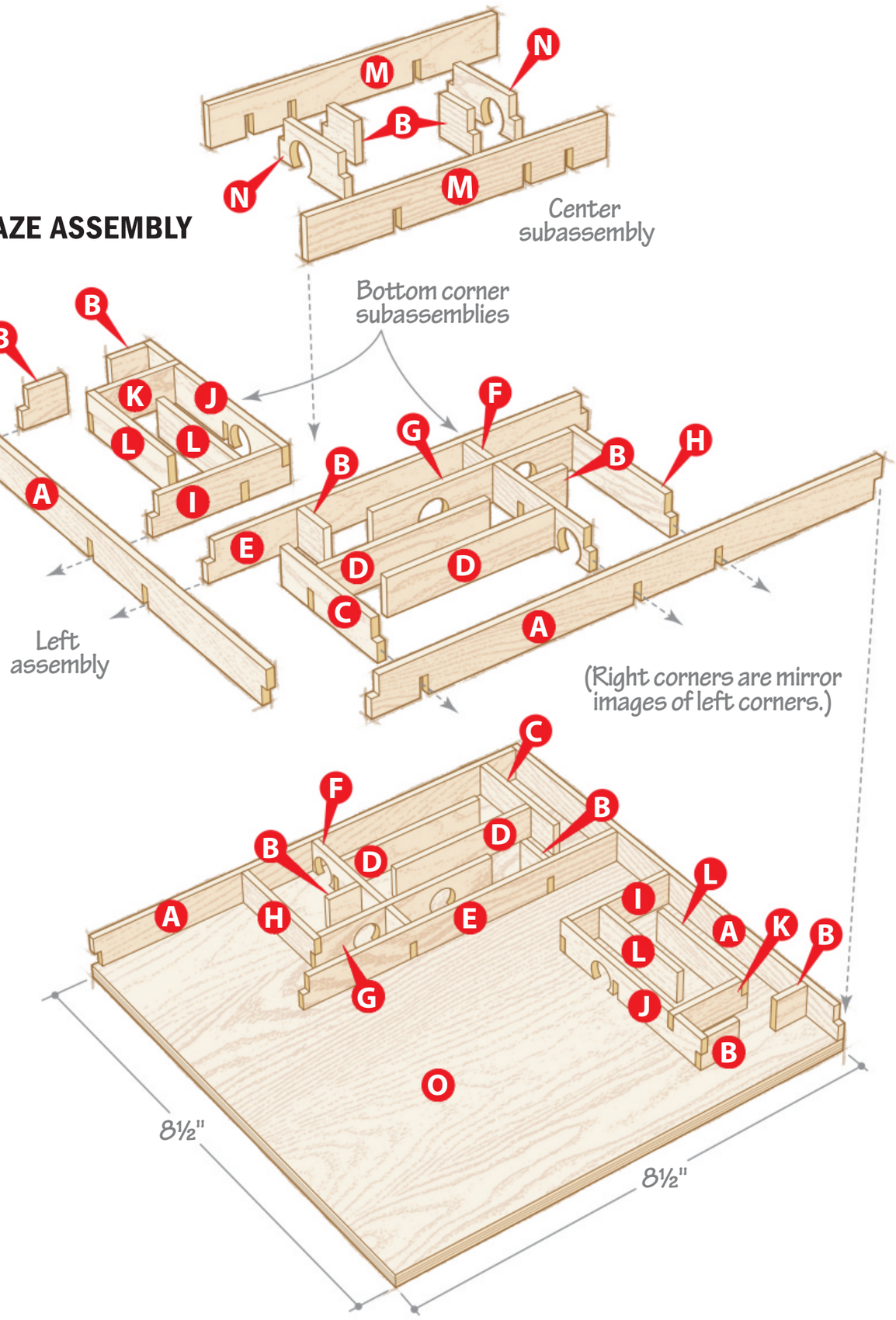

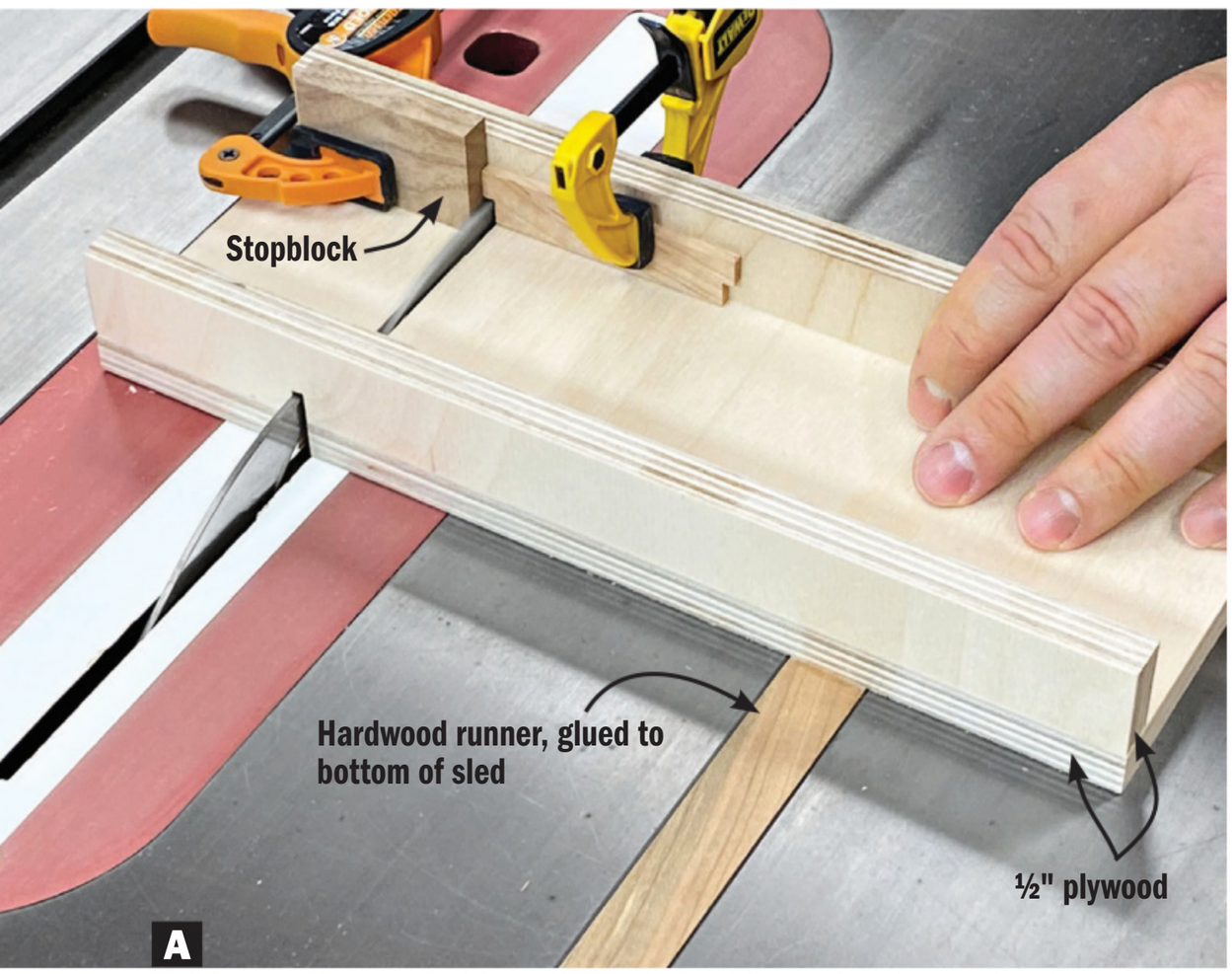

Build a small-parts sled from scrap plywood for cutting the notches in the walls. To accurately cut the end rabbets, clamp a stopblock next to the blade kerf and use another clamp to hold the workpiece.



Lay out the interior notches on the walls, then cut each notch, aligning the layout marks with the kerf cut on the sled. Again, secure the workpiece with a small clamp, keeping your fingers clear of the blade as you make each cut.

4 Glue the four corner subassemblies to the outside maze walls (A), then glue in the remaining two walls (B) [**Drawings 2, 3**].

5 Cut to size the maze bottom (O). Glue the maze wall assembly to the maze bottom, then glue the center subassembly to the maze bottom [**Drawing 2**].

6 Mark the pitfall hole locations in the bottom panel (O) [**Drawing 3, Photo D**], then drill the holes.

SKILL BUILDER

A sticky solution

It can be a challenge when gluing small parts to apply only a small amount of glue, only in the spot where you want it, and not glue your fingers together in the process. When assembling the maze walls, or making a repair on the fly, consider pairing an applicator tip with your adhesive of choice. Some CA glue bottles are designed for precision, others include replaceable needle-point tips. For PVA glue, small, refillable applicator bottles provide a great amount of control.



Source: Gorilla micro precise super glue, $6; Starbond EM-150 with applicator tips, $11.49; Precision tip applicator bottles [pack of 12], $9, woodmagazine.com/stickysolution.





3 MAZE BOTTOM

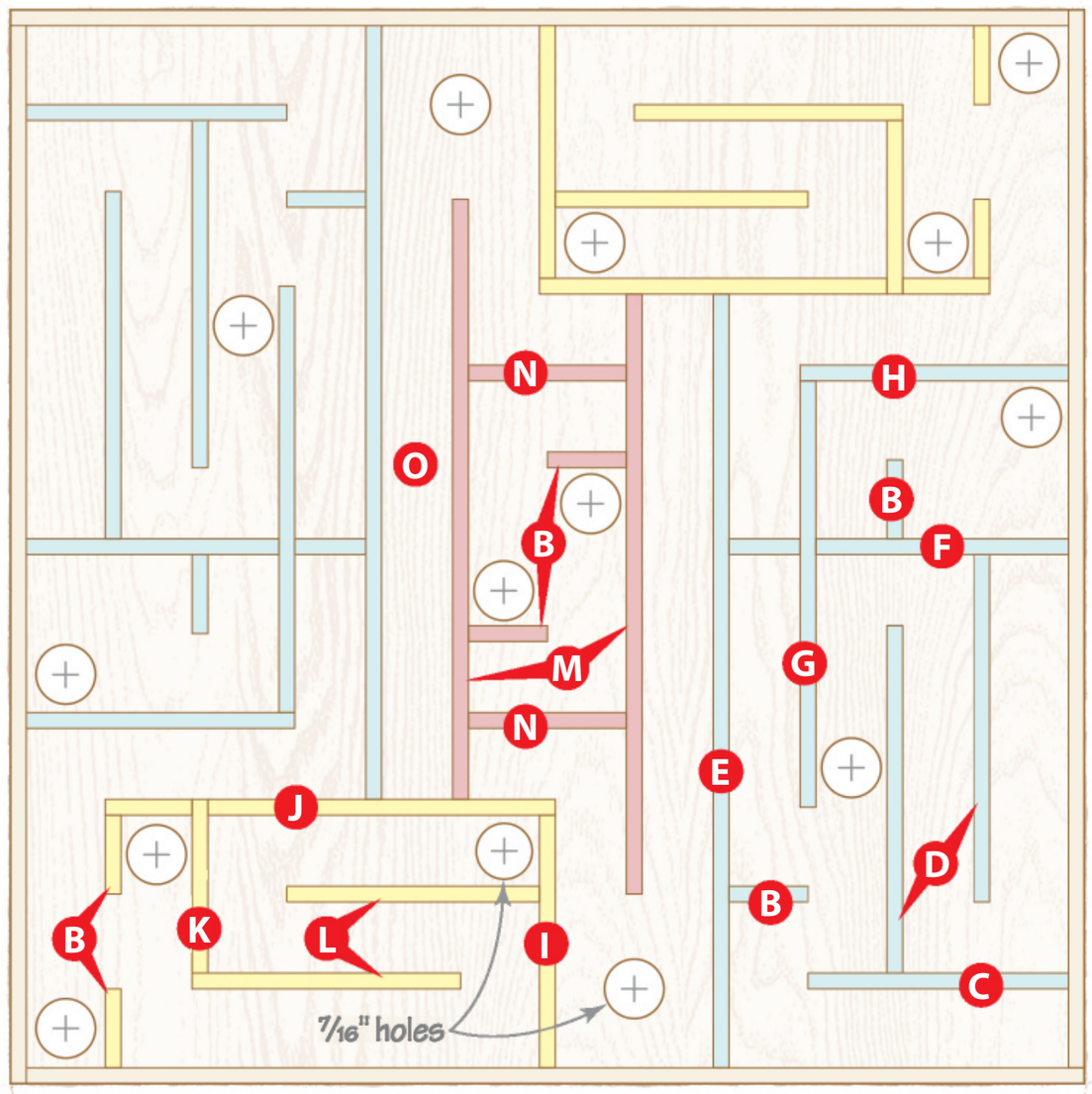

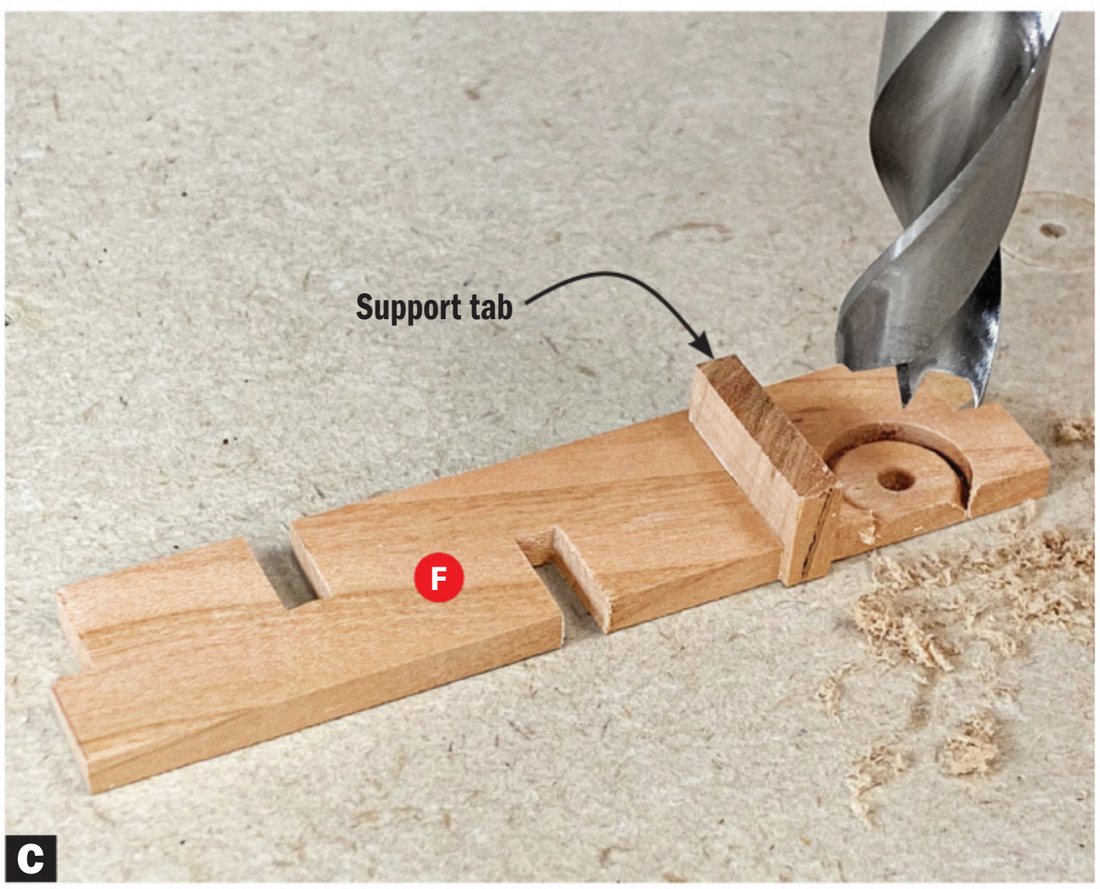

C

Use a sharp brad-point bit to drill the doorway holes. Insert a scrapwood support tab in the notch next to the hole to prevent the fragile part from breaking.



D

Press the flutes of a 9/16" brad-point bit against adjacent walls to mark the centers of each hole in the maze bottom (O). Then drill the holes with a 7/16" bit, leaving 1/16" between the edges of the holes and the walls.

Oh, the joystick

1 Cut to size the joystick components (P–R). Glue the arm fillers (R) between the arm connectors (Q), centered [**Drawing 4**].

2 Drill the holes in the arm connectors (Q) and the vertical arms (P), then radius the ends [**Drawings 4, 4a**].

3 Cut a mortise in a 1¾" cherry ball [**Photos E, F**], then glue the ball to a vertical arm (P) [**Drawing 4**].

4 Drill a ¼" hole centered in the end of a ⅝" cherry dowel, then crosscut the dowel to ¼"-long sections. Repeat until you have eight pin retainers [**Drawing 4**]. From a ¼" maple dowel, cut to length six 1"-long pins.

5 Slide the horizontal arms (Q/R) over the vertical arms (P) [**Drawing 4**]. Insert four of the pins, then glue the pin retainers to the ends of the pins.

4a VERTICAL ARM

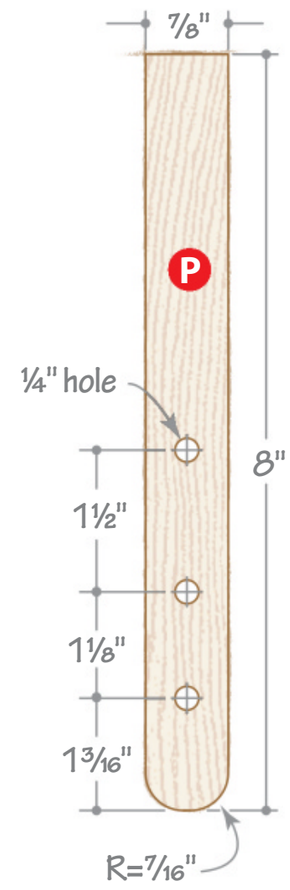

4 JOYSTICK ASSEMBLY

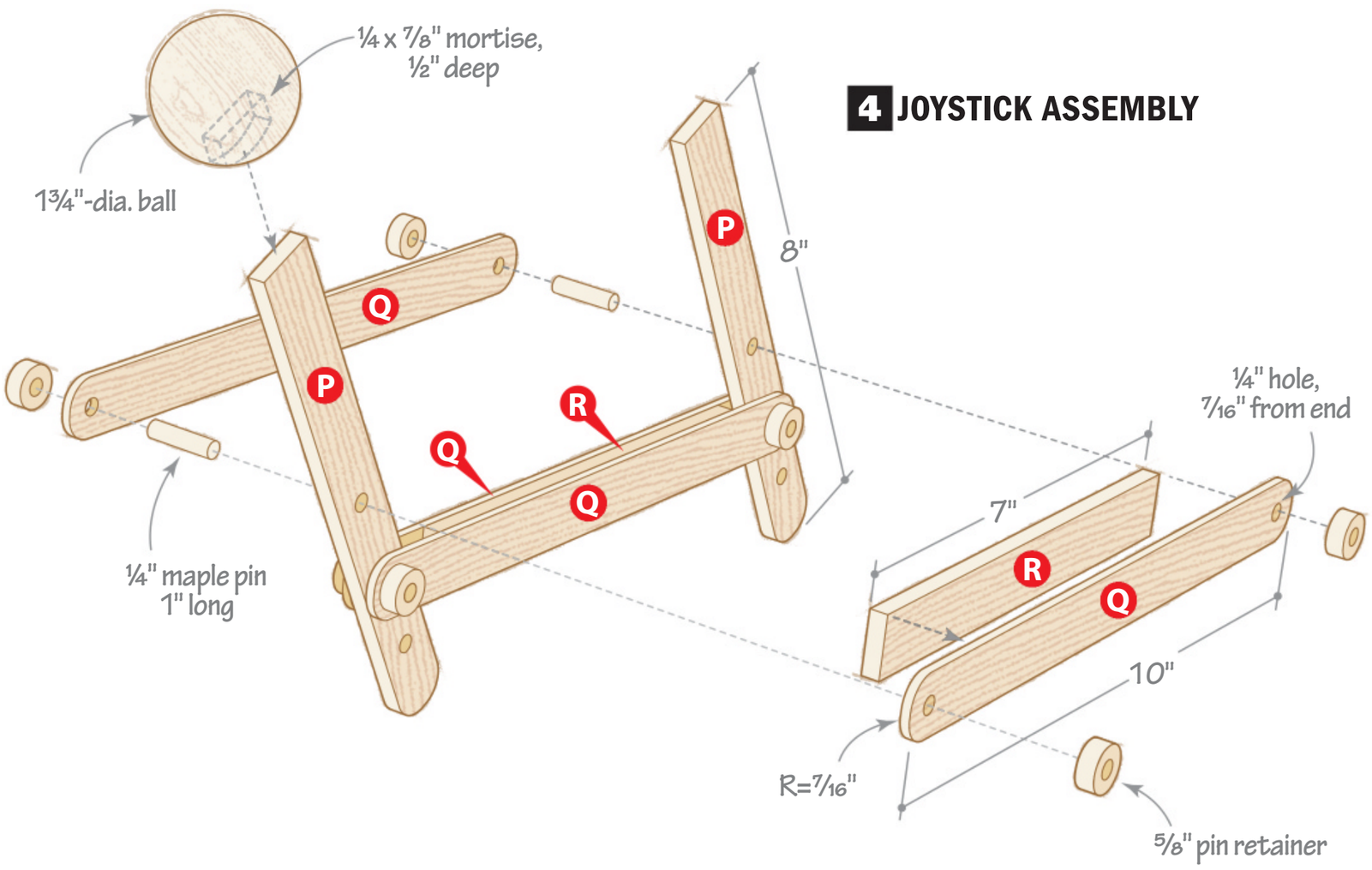



Hold the ball in a handscrew clamp and score the edges of the mortise with a chisel. Then, pare away the surface of the mortise, working from both ends and checking the fit of a vertical arm (P) as you go.



Transfer the ball to the drill press and use a ¼" bit to remove the bulk of the mortise and bring it to final depth. Clean up the walls and bottom with a chisel, again checking the fit of the vertical arm (P).

__Tip!__ Dry-fit the tray frame around the maze as you gradually increase the depth of the rabbets.

Contain the perimeter

1 Cut to size the tray frame parts (S, T), mitering the ends [**Exploded View**]. Cut both rabbets on the inside faces, then form the opening on the tray front (T) [**Drawing 5**].

2 Apply glue to the tray frame (S, T) miters and clamp them together [**Exploded View**]. Cut to size the tray bottom (U) and tray support plate (V). Glue the support plate to the tray bottom, centered, then glue the bottom to the tray assembly.

3 Round over the bottom edge of the tray [**Drawing 5**]. Form the slot in the support plate (V) and tray bottom (U), then glue the rear vertical arm (P) into the slot, flush with the top of the tray bottom [**Exploded View**].

Build a base for the chase

1 Cut to size the base sides (W) and front and back (X), mitering the ends [**Exploded View**]. Rabbet their top edges, then glue and clamp them together to form the base frame [**Exploded View**].

2 Cut to size the base top (Y). Cut the slots through the top, then file the bottom faces of the slots, allowing for side-to-side movement of the control arm [**Drawing 6**]. Glue the base top to the base frame assembly [**Exploded View**].

3 Cut to size the feet (Z). Glue the feet to the bottom of the base assembly, then round over the top edges of the base [**Exploded View**].

Ready to roll

1 Finish-sand the parts and apply a finish. We used a spray lacquer.

2 Insert the vertical arms (P) of the control arm assembly into the base slots, securing them with the remaining two maple pins [**Exploded View**].

3 Place the maze into the maze tray and attempt to get the ball from one corner to the opposite corner. Look out for pits!

***Note:** Play the game with any 11/32"-diameter marble or ball bearing.*

Produced by **Zach Brown** with **John Olson**
Project design: **John Olson**
Illustrations: **Roxanne LeMoine, Lorna Johnson**

5 TRAY FRONT

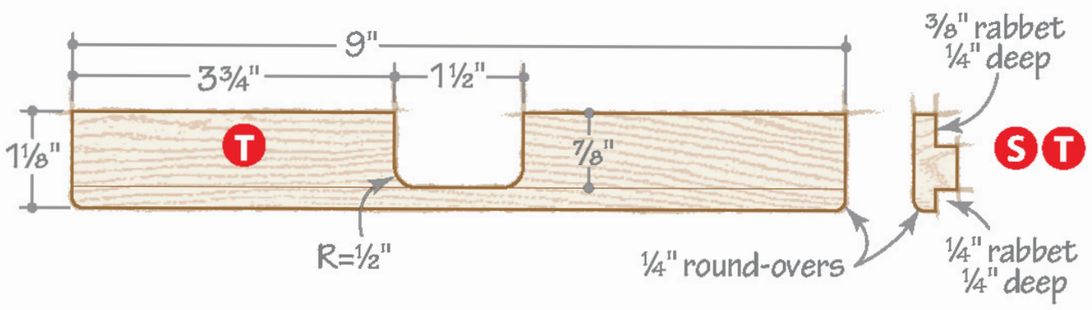

6 BASE TOP

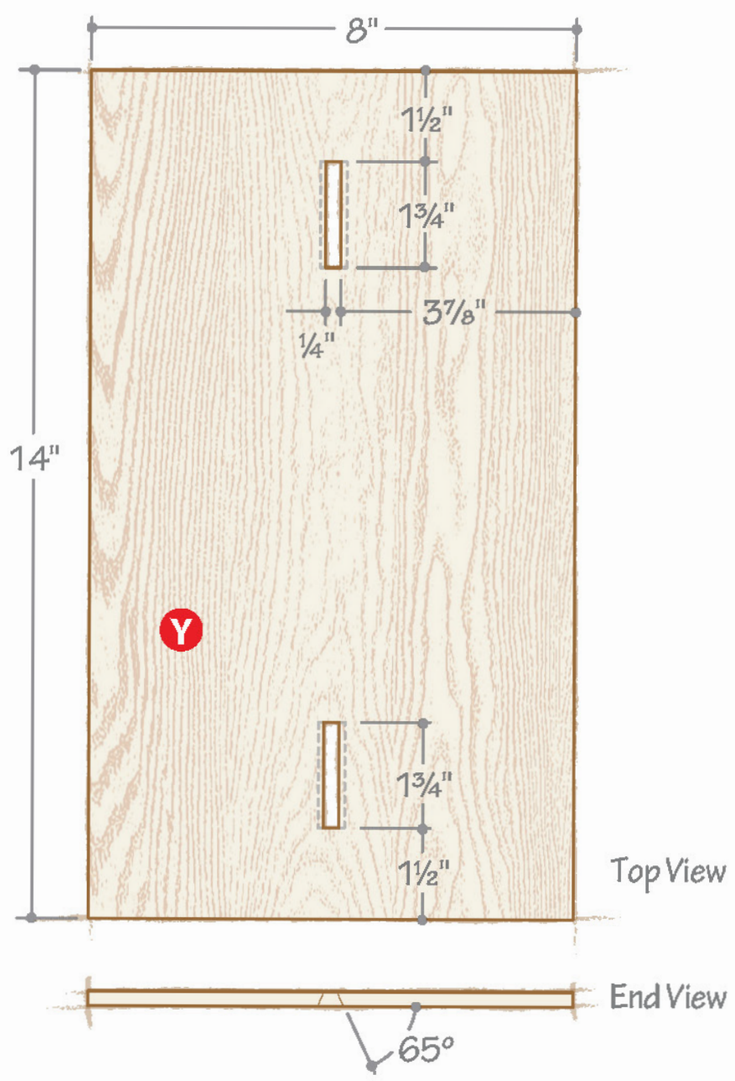

Materials List

Part		FINISHED SIZE T	W	L	Matl.	Qty.
A	outside maze walls	⅝"	⅛"	8½"	C	4
B	maze walls	⅝"	⅛"	¾"	C	10
C	maze walls	⅝"	⅛"	2 3/16"	C	2
D	maze walls	⅝"	⅛"	2⅞"	C	4
E	maze walls	⅝"	⅛"	6⅜"	C	2
F	maze walls	⅝"	⅛"	2 15/16"	C	2
G	maze walls	⅝"	⅛"	3½"	C	2
H	maze walls	⅝"	⅛"	2¼"	C	2
I	maze walls	⅝"	⅛"	2¼"	C	2
J	maze walls	⅝"	⅛"	3 9/16"	C	2
K	maze walls	⅝"	⅛"	1½"	C	2
L	maze walls	⅝"	⅛"	2⅛"	C	4
M	maze walls	⅝"	⅛"	4¾"	C	2
N	maze walls	⅝"	⅛"	1½"	C	2
O	maze bottom	¼"	8½"	8½"	BB	1
Joystick						
P	vertical arms	¼"	⅞"	8"	C	2
Q	arm connectors	⅛"	⅞"	10"	C	4
R	arm fillers	¼"	⅞"	7"	C	2
Tray						
S	tray sides/back	½"	1⅛"	9"	C	3
T	tray front	½"	1⅛"	9"	C	1
U	tray bottom	¼"	8½"	8½"	BB	1
V	tray support plate	½"	2"	4"	C	1
Base						
W	base sides	½"	1¾"	14½"	C	2
X	base front/back	½"	1¾"	8½"	C	2
Y	base top	¼"	8"	14"	BB	1
Z	feet	¼"	1½"	1½"	C	4

This project requires .25 board foot of ¾" cherry, .25 board foot of ½" cherry, and ⅛ sheet of ¼" Baltic birch plywood.

Materials key: C-cherry, BB-Baltic birch plywood.
Source: Brass balls 11/32" (4), 1¾" birch/maple ball, ⅝" cherry dowel, ¼" maple dowel, kit no. RS-01315, $19.95 plus shipping, 888-636-4478, woodstore.net/mazekit.

Getting Started with CNC

By Randy Johnson

Pull back the curtain of mystery around these increasingly affordable and infinitely useful tools.

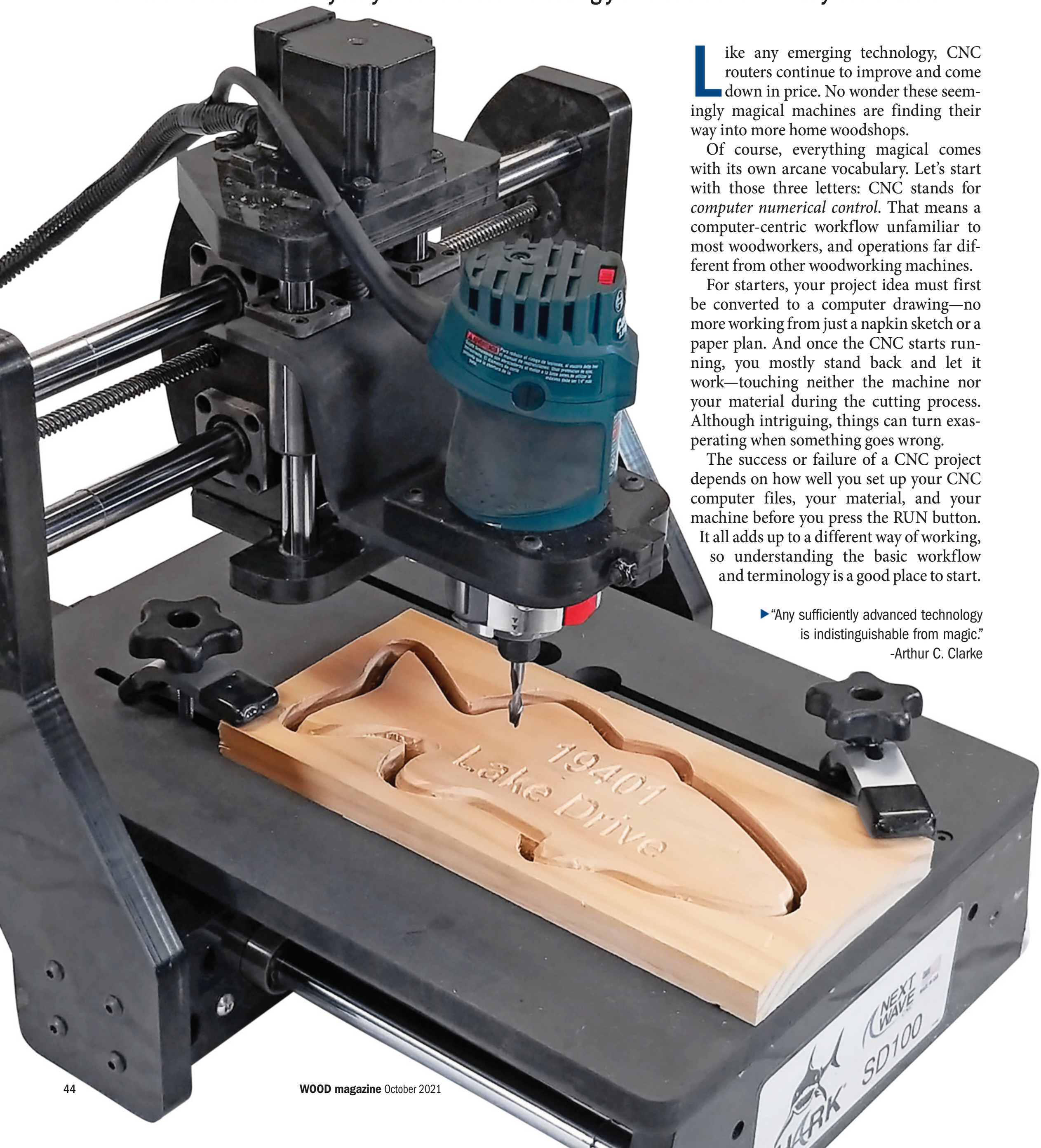

Like any emerging technology, CNC routers continue to improve and come down in price. No wonder these seemingly magical machines are finding their way into more home woodshops.

Of course, everything magical comes with its own arcane vocabulary. Let's start with those three letters: CNC stands for *computer numerical control*. That means a computer-centric workflow unfamiliar to most woodworkers, and operations far different from other woodworking machines.

For starters, your project idea must first be converted to a computer drawing—no more working from just a napkin sketch or a paper plan. And once the CNC starts running, you mostly stand back and let it work—touching neither the machine nor your material during the cutting process. Although intriguing, things can turn exasperating when something goes wrong.

The success or failure of a CNC project depends on how well you set up your CNC computer files, your material, and your machine before you press the RUN button. It all adds up to a different way of working, so understanding the basic workflow and terminology is a good place to start.

▶ "Any sufficiently advanced technology is indistinguishable from magic."
-Arthur C. Clarke

Go with the flow

CNC workflow breaks down into four primary steps, each involving software. These steps may appear complex at first, with lots of settings and details to remember, but after working through the process a few times (and making a few mistakes) it becomes routine—and the creative possibilities open up. With practice, you'll master the finer points of using a CNC and expand your skills and project accomplishments.

Step 1: Create a computer drawing

All CNC projects start at the same place—as a computer drawing. You can create this drawing from scratch, purchase one from a CNC plan provider, download from among many free online plans, or import a photo and trace over it.

Whether starting from scratch or other inspiration, such as a paper plan, you must convert your idea to a computer drawing using a *computer-aided drawing* (CAD) program. There are dozens of CAD programs ranging from basic to advanced and priced accordingly. Some common CAD programs used by CNC owners, in order of increasing complexity, include VCarve, SketchUp, and Fusion 360. Learning a CAD program requires time and a little patience, so take advantage of online or in-person training opportunities when and where available.

Although CAD programs differ in how they look and function, they share many similarities. First, they provide a set of drawing tools and a drawing area [**Photo A**] with which you create your design using lines and shapes. Plus, they have editing tools for modifying and customizing your design. Simply put, CAD drawing tools mimic what you do with a pencil, eraser, ruler, and protractor.

▶My two favorite CNC plan sources are vectric.com/vectric-community/free-projects and instructables.com/workshop/cnc/projects.

▶Watch me design this project at woodmagazine.com/cncvideos

▶Get the software:
VCarve ($349–$699)
vectric.com
Sketchup ($0–$299)
sketchup.com
Fusion360 ($495/year)
autodesk.com

A **Some manufacturers provide Vectric V-Carve** software, shown here, with the purchase of their CNC machines.

Step 2: Create the toolpath cutting files

After perfecting your CAD drawing, you create *toolpaths*, assigning router bits to the different parts or lines in your drawing (i.e., a ¼" V-bit to rout the letters on a sign, and a ¼" straight bit to cut the profile out of the blank) [**Photo B**]. At this point, you'll also program several settings that determine how fast and aggressively each bit cuts. These settings directly affect cutting time, cut quality, and bit wear. There are formulas for calculating these settings, but finding an approach that balances bit wear and cutting speeds, while maintaining a good edge quality, also comes with experience.

Creating toolpaths uses *computer-aided machining* (CAM) software [**Photo C**]. Some programs, such as VCarve and Fusion 360, combine both CAD and CAM into one program. SketchUp can only create CAD files, but VCarve or Fabber can import those CAD files to create the CAM file.

▶ Fabber (toolpathing for Sketchup) ($25–$50/month) fabber.app

After selecting and setting up your router bit(s) comes *post-processing*, which uses a small program or app called a *post processor*, included with most CAM programs. Post-processing converts the router-bit toolpath information to a *g-code file* that tells the CNC where and how to move. Post processors are specific to a CNC machine, so you must select from the menu the one made for your machine.

▶ G-code files are also referred to as cutting files, or by their file extension name such as TAP, TXT, or NC file.



B **A toolpath shows where the bit will cut,** projected onto the blank. The blue lines show the bit in the material, the red lines show the paths the bit travels above the material. This allows you to check the placement of the project, clearances for hold-downs, etc.

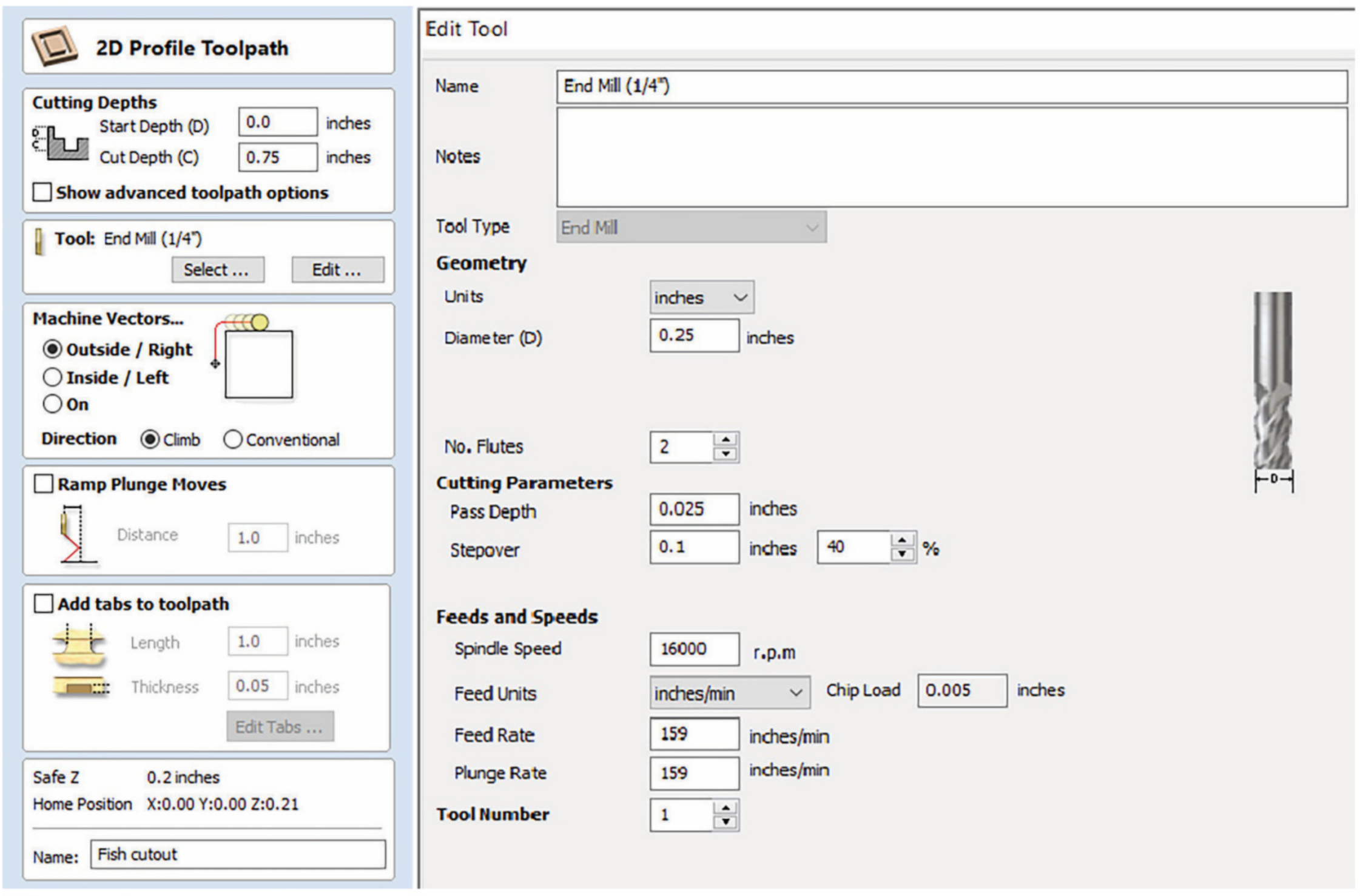

C **In the toolpath window,** you tell the CNC what size and type of bit to cut with, how deep, how fast to move the bit, and whether to cut outside the line, inside the line, or centered on the line.

Step 3: Load toolpath files to the controller

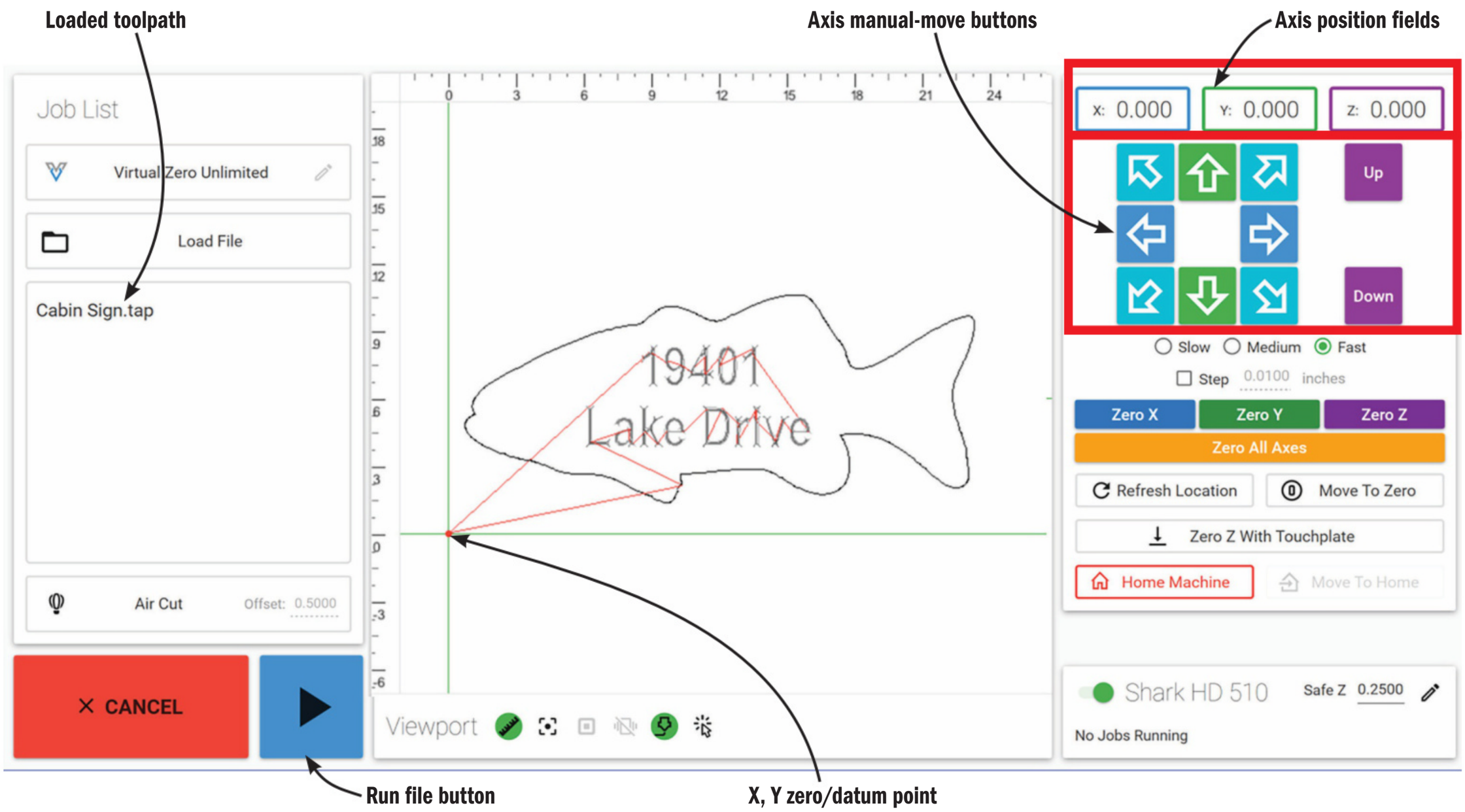

D **The computer control panel** provides a toolpath preview similar to what is seen in the CAD program. Dark lines represent cutting paths, red lines show travel above the material.

Next, load the toolpath/g-code file into the *computer control panel* software or *handheld control pendant*. Some CNC machines use only one of these methods, while others come equipped with both.

The computer control panel [**Photo D**] displays a simulation of the cutting process and may include other features not found on a handheld control pendant. However, using the computer control panel exposes your computer to the dust and hazards in your shop. By comparison, the handheld control pendant [**Photo E**] puts all the essential functions at your fingertips without taking your computer into the shop.

To load the g-code file into the computer control panel, simply open the file on your computer. To load a g-code file to the handheld control pendant, transfer the file to a USB drive, and plug it into the pendant.



E **A handheld control pendant** provides important machine controls, but no preview of toolpaths.

Step 4: Set up your material and machine your project

▶Learn several methods for mounting parts to a CNC. woodmagazine.com/cncgrip

Prior to running the g-code file, secure your material to the machine table and calibrate the CNC to the material's location. Choices for securing the material include clamps, screws, double-sided tape, hot-melt glue, wedges, cams, and even vacuum. No single method works for all projects. Some methods work quickly, some prove more secure, some suit large parts, and others work for small parts, so use what fits your situation. Whichever one you pick, you must get two things right: First, the hold-down must prevent your material from shifting during the machining process. Second, the hold-down must not encroach on the bit's toolpath which could damage the router bit, machine, or project.

Most CNC machines can't (yet) see where you mounted your material, so you must tell the machine where the material rests in relation to the bit [**Photo F**]. Do this by calibrating, or *zeroing*, the *X, Y,* and *Z axes* using the control panel or pendant. The X, Y, and Z zero settings must match the settings you used in your CAD/CAM program. A corner or the center of the material serves as the typical X/Y zero/datum position.

Once you have the g-code file loaded, material mounted, and the zero locations set for each axis, double-check your setup to make sure everything looks right. If everything checks out, press the RUN button and stand by while the CNC carries out your carefully planned project design.



Randy Johnson is the author of the book "CNC Router Essentials." He also hosts CNC webinars and VCarve design classes at cncrouteressentials.com and in person at Marc Adams School of Woodworking.

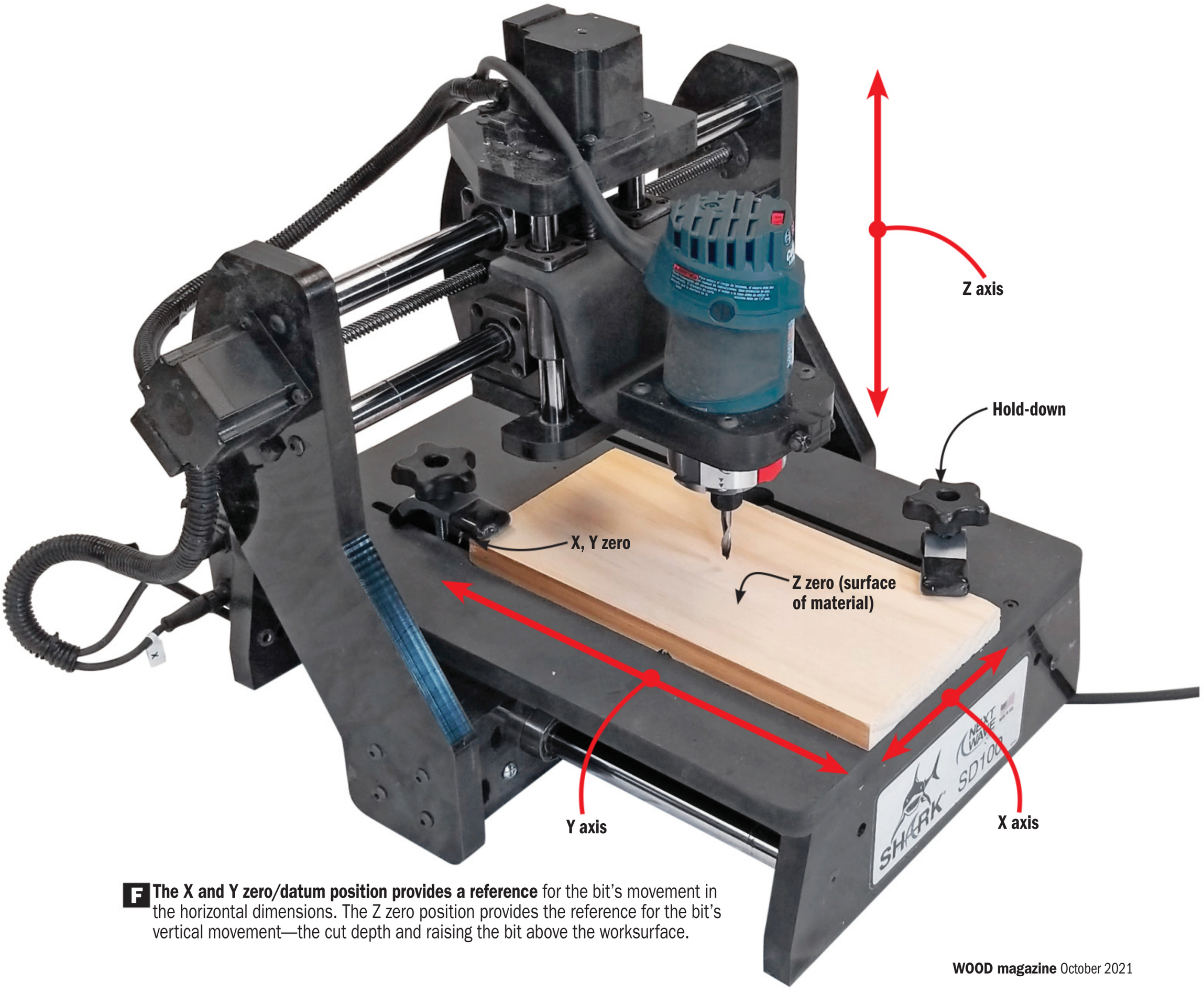

F **The X and Y zero/datum position provides a reference** for the bit's movement in the horizontal dimensions. The Z zero position provides the reference for the bit's vertical movement—the cut depth and raising the bit above the worksurface.

Like this issue's Rock 'n' Roll Maze Game?



Then, you'll love these downloadable Bartop Game Plans!











Don't forget the parts kits! **woodstore.net/bartopgames**

DIMENSIONS:
32½" W × 18" D × 56⅝" H

Approximate materials cost:
$200

Case interior dimensions:
26¼" W
11¾" D
20½" H

Woodcarvings created and provided by Randy Hansen

Display Table and Case

Show off your cherished objects, found or made.

This fully enclosed glass case protects the items within from dust and grubby fingers, while allowing 360° views. The case simply rests on the table, making it easy to remove for loading and unloading, and so you can choose to use the table as a stand-alone piece of furniture.

A table for your turnings

1 Cut to size the legs (A) [**Materials List**]. Lay out and cut the mortises on the legs [**Drawing 1, Photo A**].



Wooden sculpture created and provided by Tom Whalley

EXPLODED VIEW

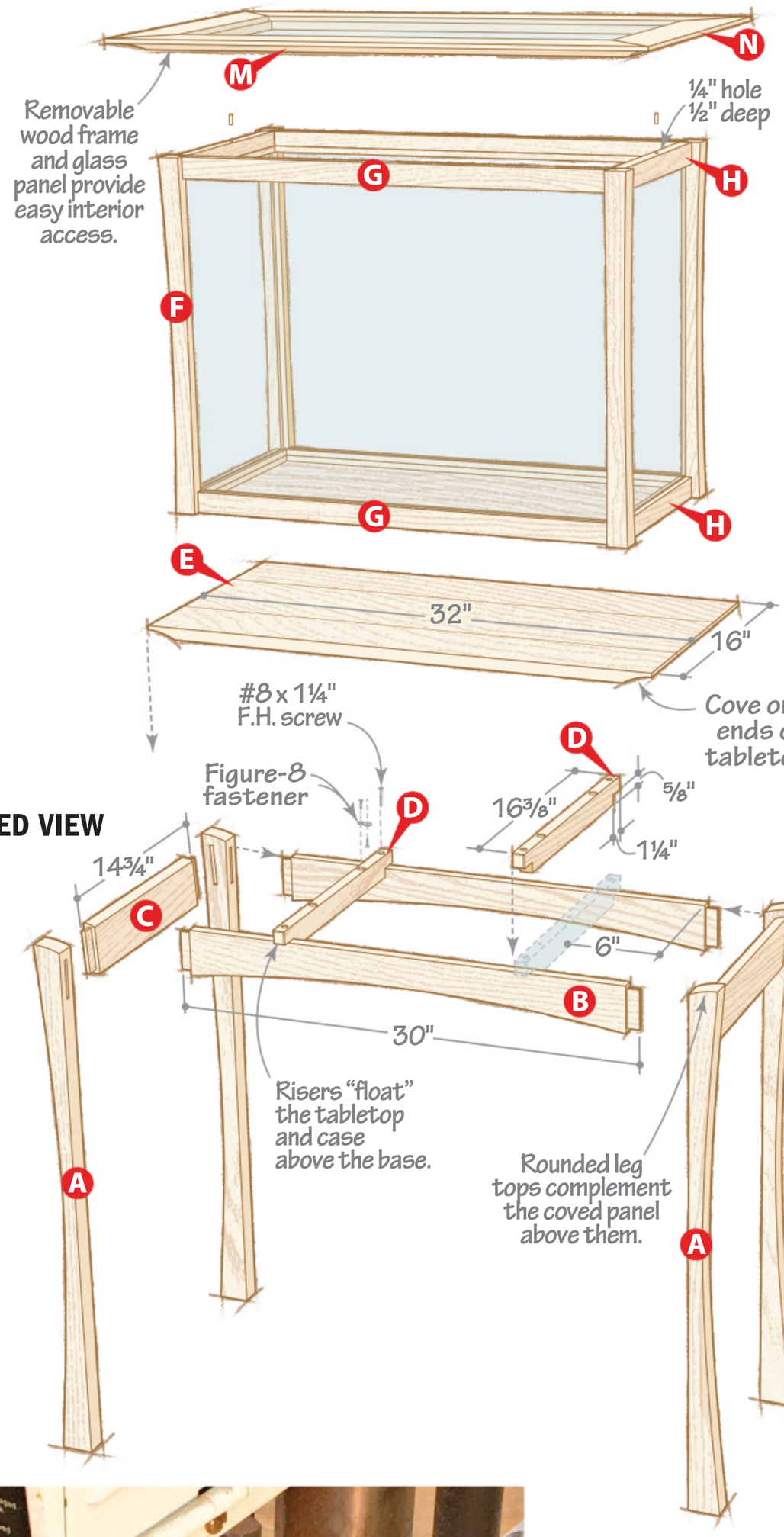

1 LEG MORTISE DETAIL (Left rear leg shown)

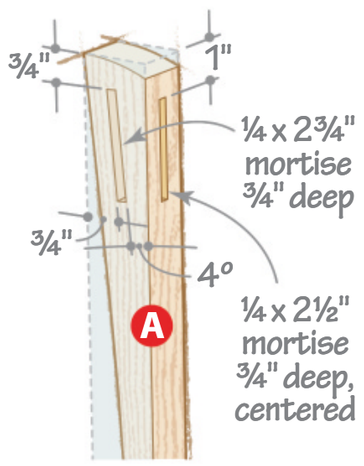



Cut the angled mortise on the legs (A) with a 4° block between the workpiece and the fence. Attach the block to the leg with double-faced tape.



Use a small block plane to clean up the curve on the legs (A), planing downhill from each end to the center to avoid tear-out.



Using a block plane, round the bevel from the outside edge to the inside. This mimics the curve on the top of the legs (A) and the cove cut later on the tabletop (E).

2 LEG FRONT/BACK VIEW

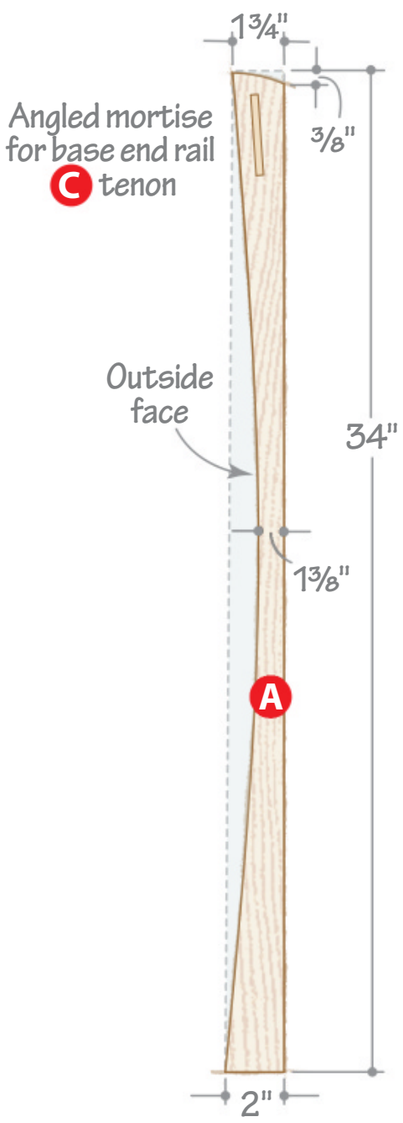

3 BASE RAILS

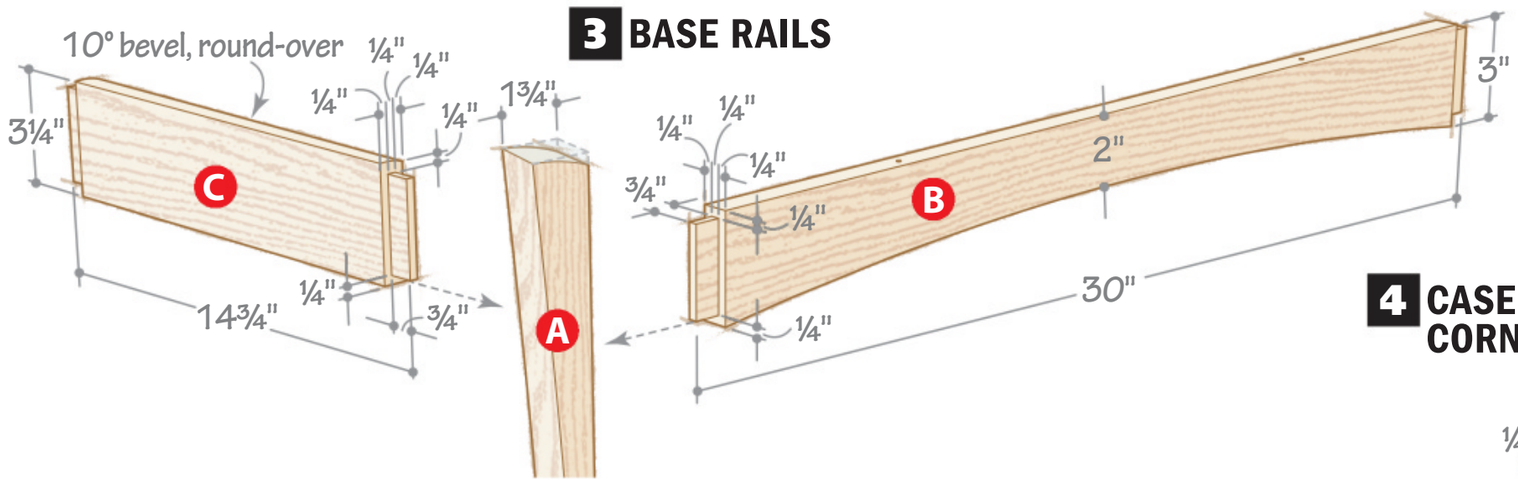

2 Lay out and cut the curve on the outside edge and top end of each leg (A) [**Drawing 2, Photo B**].

3 Cut to size the base rails (B, C) [**Drawing 3**]. Cut the tenons on the ends of the rails, then shape the curve on the bottom edge of the front and back rails (B).

4 Bevel the top edge of the end rails (C) [**Drawing 3**], then plane the bevel to an arc [**Photo C**].

5 Finish-sand the legs and rails (A–C). Apply glue to the end-rail tenons and assemble the sides [**Exploded View**]. Once the glue dries, finish assembling the base [**Photo D**].

4 CASE POST INSIDE CORNER VIEW

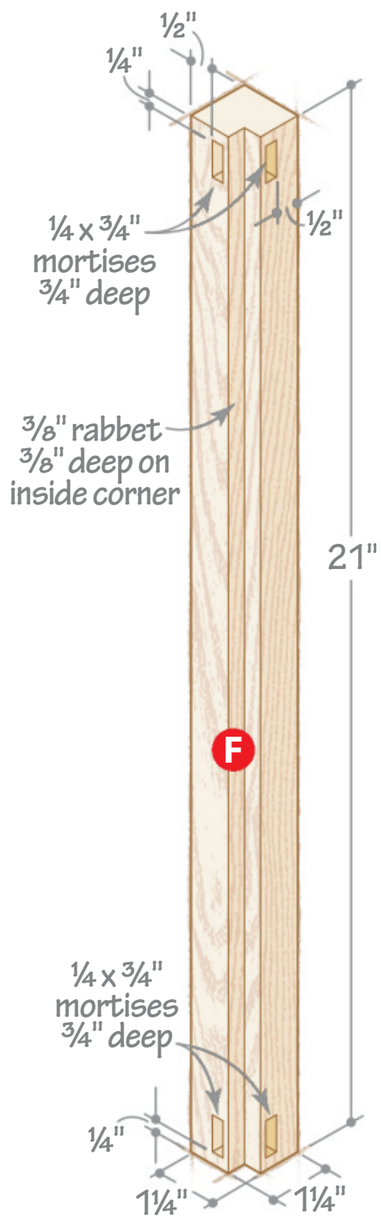

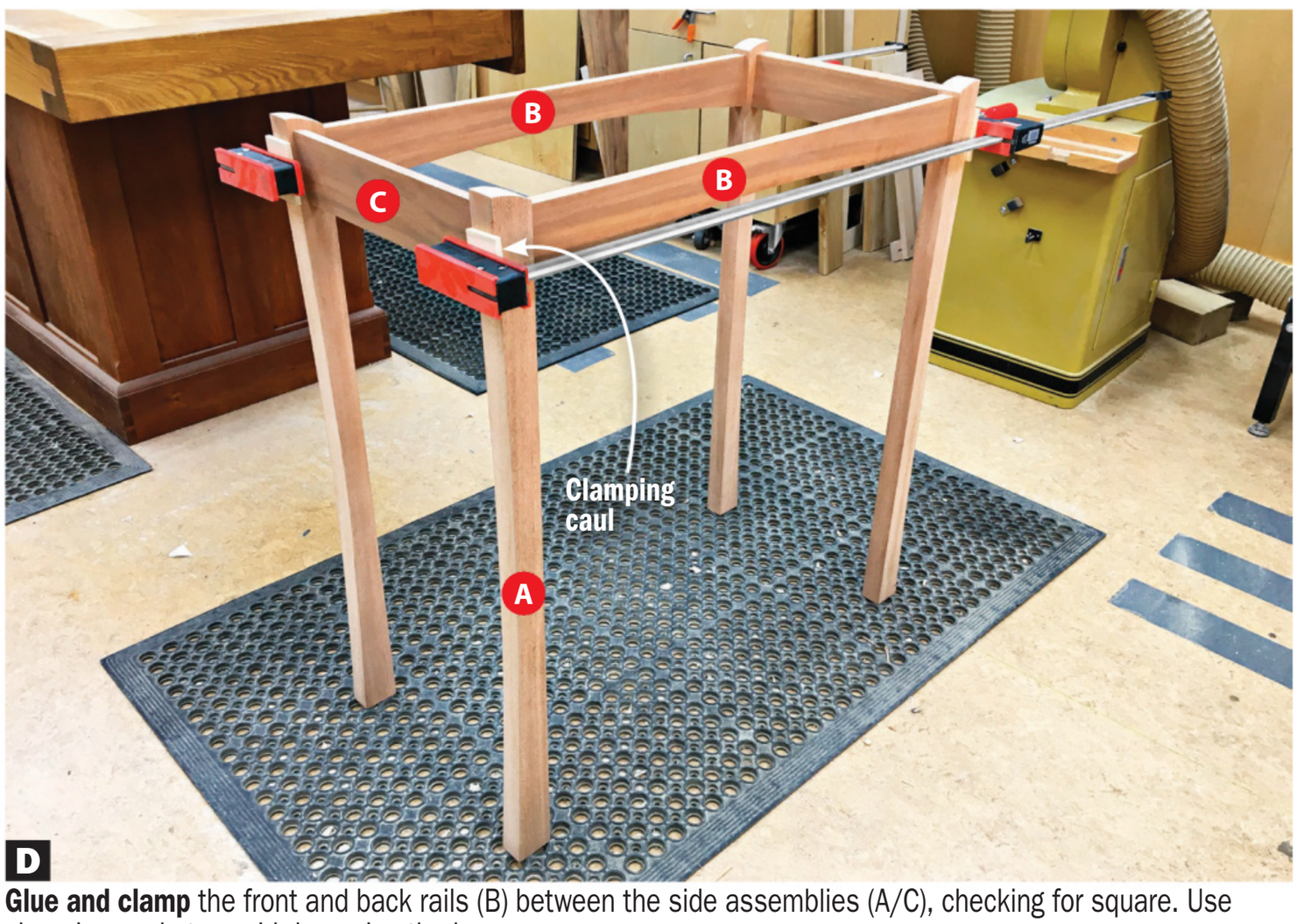

Glue and clamp the front and back rails (B) between the side assemblies (A/C), checking for square. Use clamping cauls to avoid damaging the legs.

▶Learn four ways to cut mortise-and-tenon joinery. woodmagazine.com/mt4ways

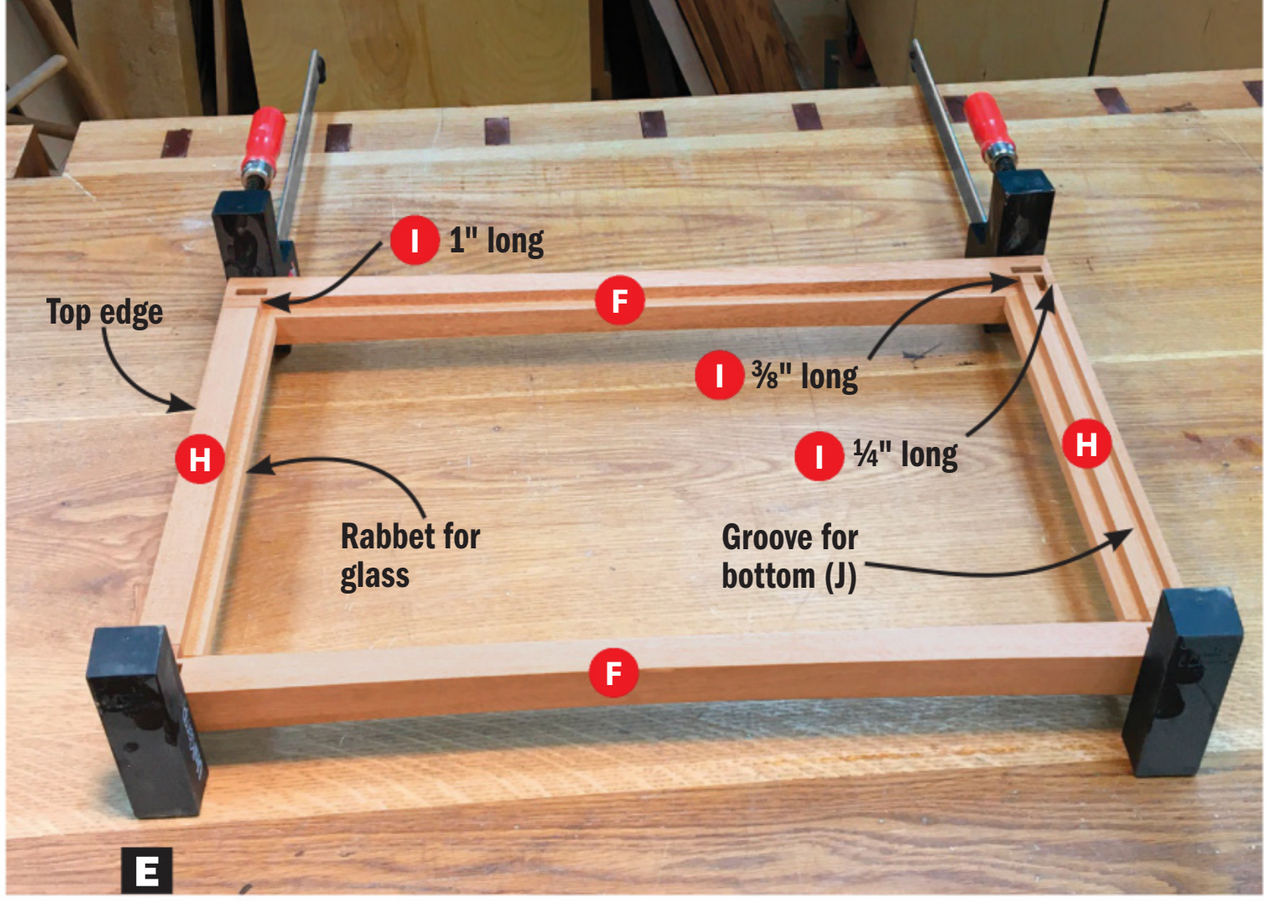

With the case sides assembled, glue the fillers (I) into the post (F) rabbets. Cut a single block for the top of each rabbet, and two blocks for the bottom to allow the bottom (J) groove to extend to the post.

6 CASE-RAIL DETAIL

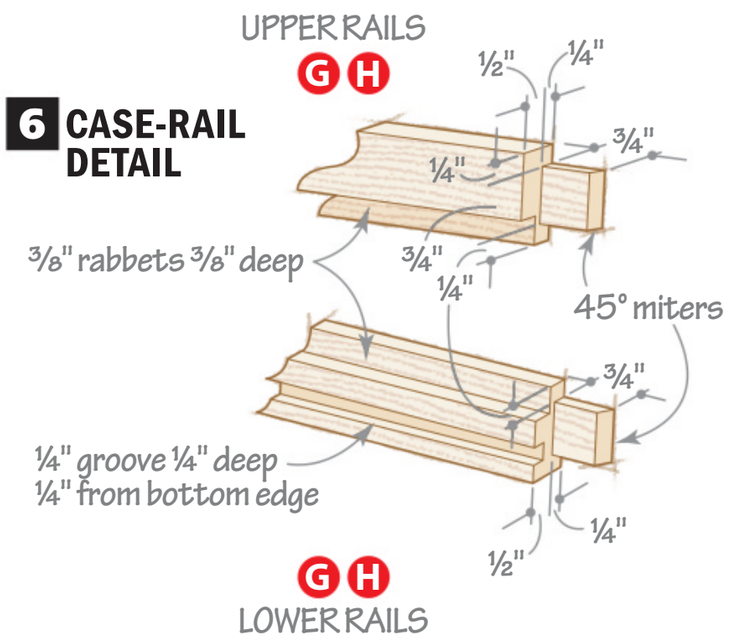

5 CASE EXPLODED VIEW

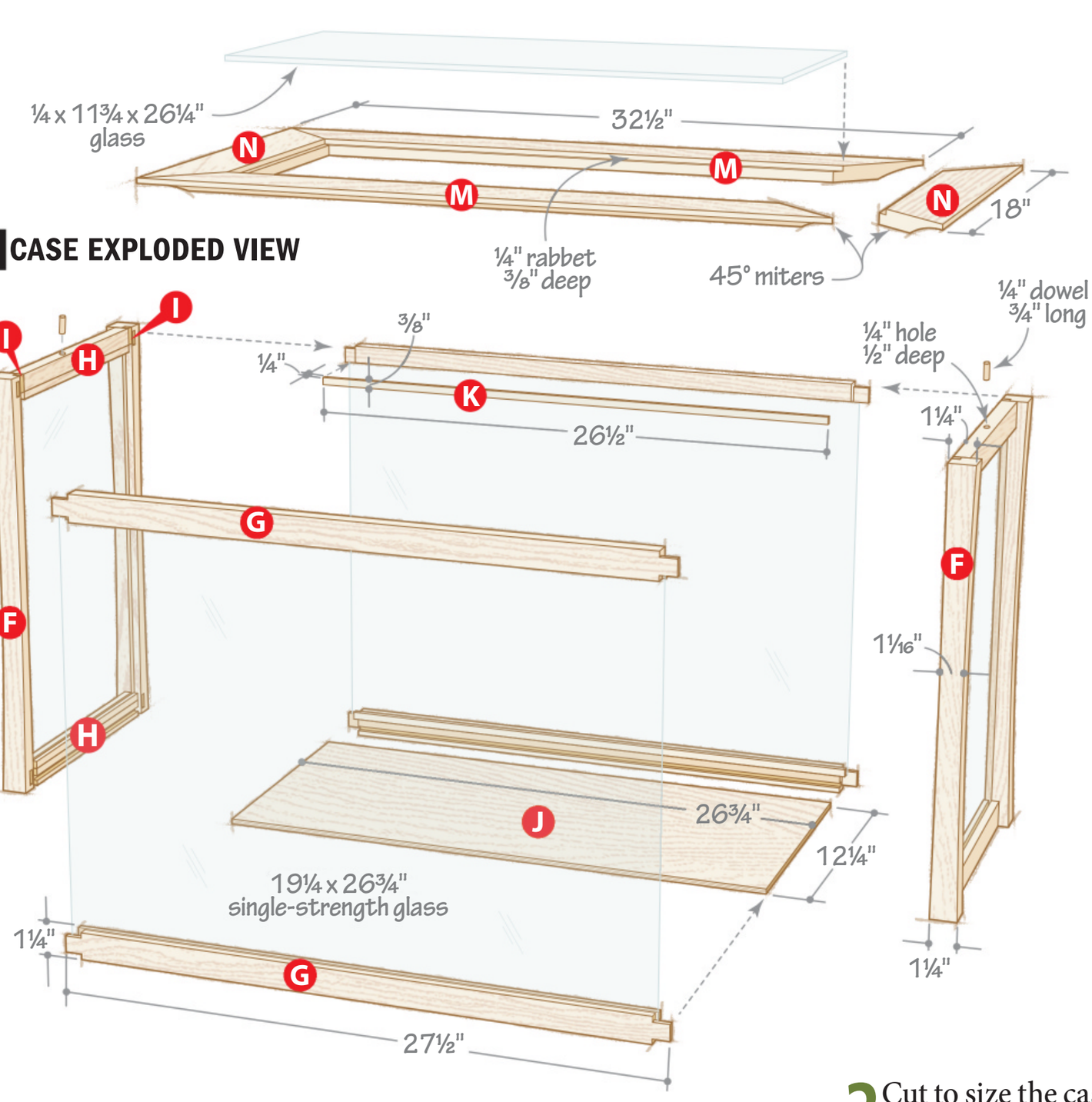

7 SIDE PANEL ASSEMBLY

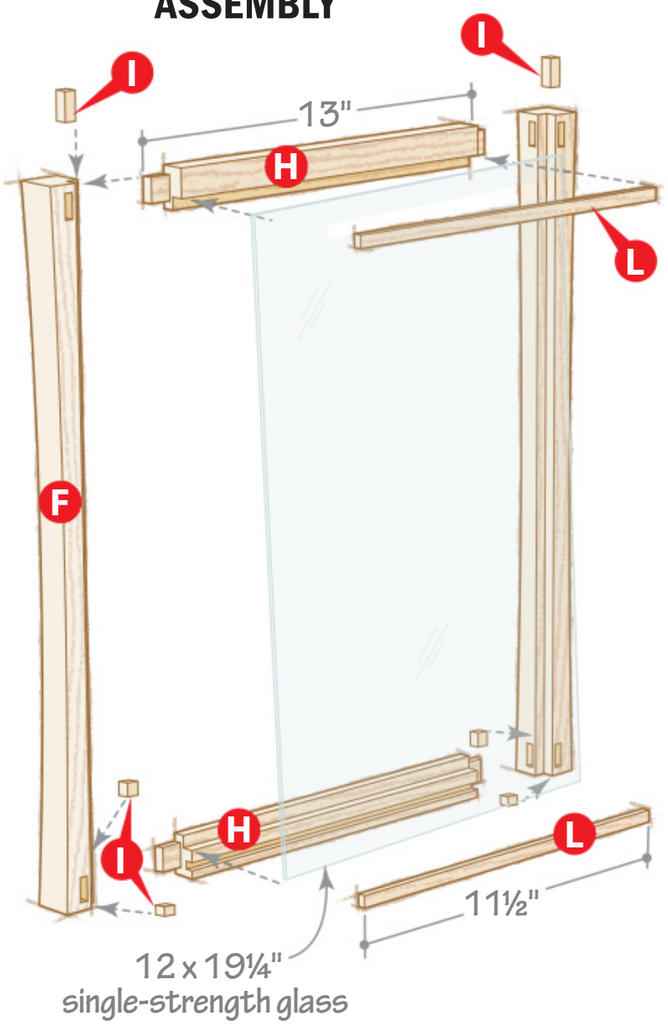

6 Cut to size the risers (D) [**Exploded View**]. Notch the ends, finish-sand the risers, and glue and screw them to the front and back rails (B) [**Exploded View**].

7 Glue up a panel for the tabletop (E) and set it aside for now.

A case for your carvings

1 Cut to size the case posts (F) [**Drawing 4**], then lay out and cut the mortises. Rabbet the inside corner; then shape the curve on both outside faces [**Drawing 5**].

2 Cut to size the case rails (G, H). Form the mitered tenons on the ends, and rabbet one edge [**Drawing 6**]. Groove the lower rails.

3 Finish-sand the case posts and rails (F–H), then glue together the case sides [**Drawing 7**]. Cut to size the fillers (I), then glue them into the case side assemblies [**Photo E**].

4 Cut to size the bottom (J) [**Drawing 5**]. Insert the bottom into the lower side rail (H) grooves, then glue and clamp the front and back rails (G) between the sides.

5 Cut to size the glass stops (K, L), finish-sand, and set them aside for now.

Tip! *Don't want to buy a full sheet of mahogany plywood? Learn how to make your own.* woodmagazine.com/veneering

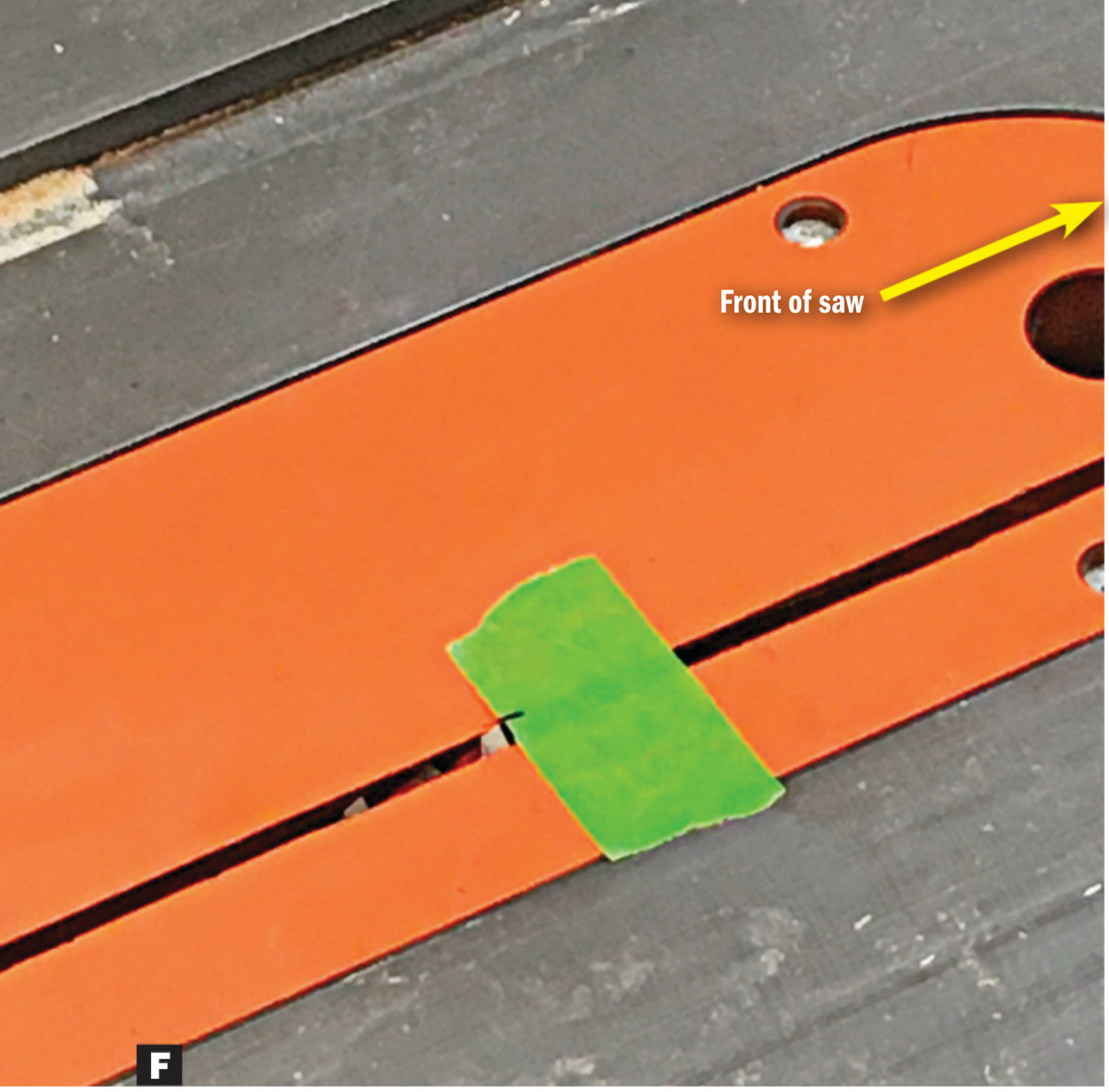

F

Raise the blade until a tooth barely protrudes above the surface. Place masking tape at this position and make a pencil mark on the right side of the tooth.

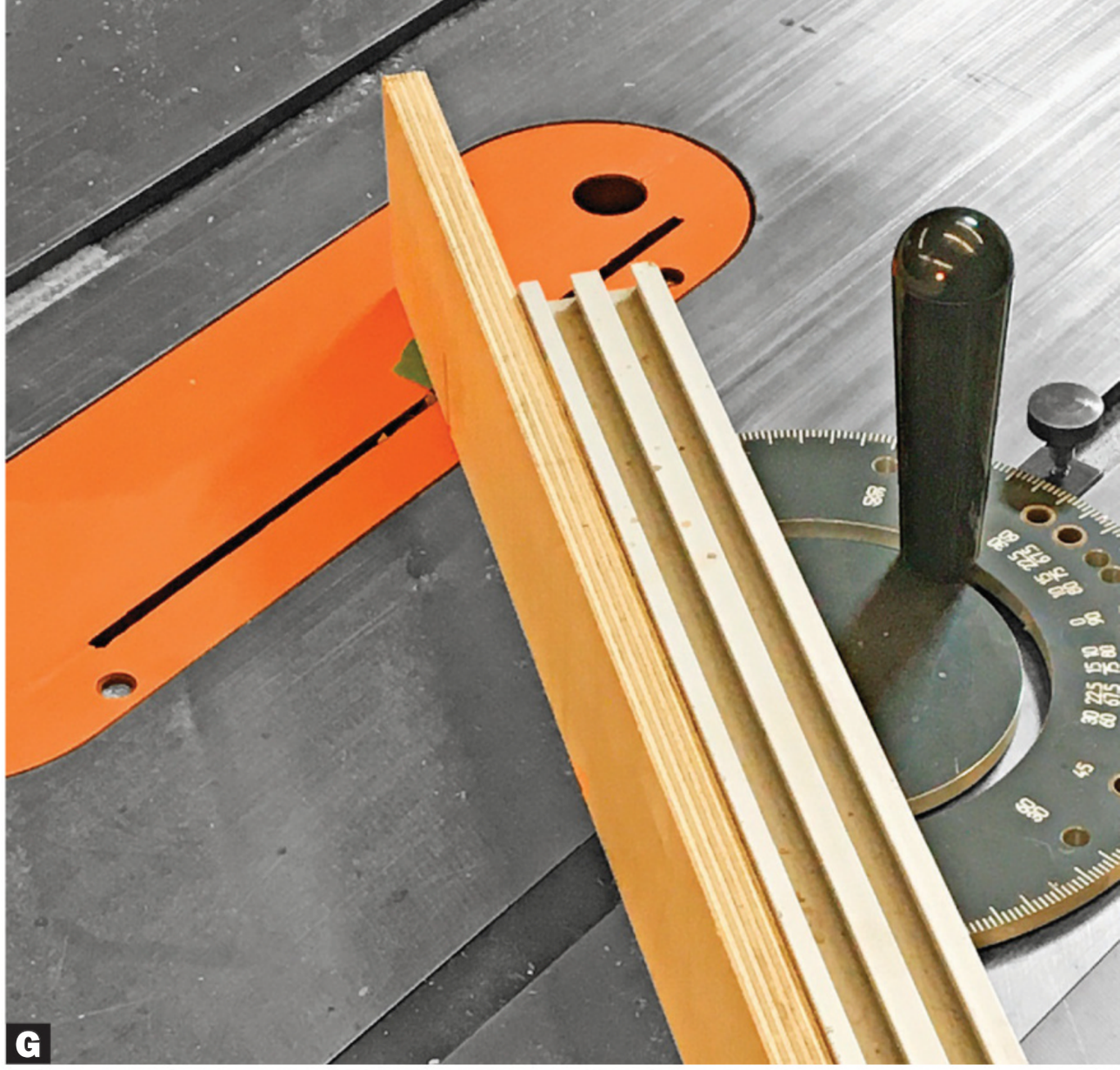

G

Adjust your miter gauge to 37° and install an auxiliary fence. Position the miter gauge so the fence intersects the pencil mark. Clamp a long fence to your tablesaw against the miter gauge and extending beyond the saw's surface, then remove the miter gauge.

Trim and finish

1 Cut three ¾×3½×40" blanks for the case top trim (M, N).

2 Install an 80-tooth blade in your tablesaw, and set up the saw for cutting coves [**Photos F, G**]. Cut the cove profile on the top trim blanks and the tabletop (E) [**Drawing 8, Photo H**].

3 Rabbet the trim blanks, then miter-cut the top trim (M, N) to length [**Drawing 5**]. Assemble the top frame [**Photo I**], and once the glue dries, finish-sand the frame and the tabletop (E).

4 Drill a centered hole in the top of each upper side rail (H) [**Drawing 5**]. Insert dowel center finders in each hole, center the top frame on the case, and press down to mark the locations of the dowel holes. Drill a ¼" hole 5/16" deep in each location on the frame, then glue dowels into the holes on the case.

5 Touch up any sanding and apply a finish. We used a wipe-on polyurethane.

6 After the finish dries, attach the tabletop (E) to the base using figure-8 fasteners [**Exploded View**]. Install the glass in the sides of the case using the glass stops (K, L) [**Drawing 7**].

7 Place a cherished object into the case, insert the glass in the top frame, then fit the top frame over the dowel pins [**Drawing 5**].

▶Learn additional tips for cutting coves, including how to sand away the saw marks. woodmagazine.com/cuttingcoves

▶We used a 23-gauge pin nailer to install the glass stops. No nailer? Try this tip. woodmagazine.com/startingstop

8 TOP TRIM AND TABLETOP PROFILE

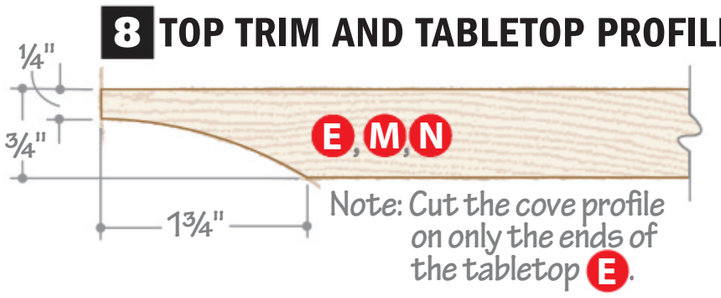

Materials List

Part		FINISHED SIZE T	W	L	Matl.	Qty.
Base						
A	legs	1⅜"	2"	34"	M	4
B	base front/back rails	¾"	3"	30"	M	2
C	base end rails	¾"	3¼"	14¾"	M	2
D	risers	¾"	1½"	16⅜"	M	2
E	tabletop	¾"	16"	32"	EM	1
Case						
F	case posts	1¼"	1¼"	21"	M	4
G	case front/back rails	¾"	1¼"	27½"	M	4
H	case side rails	¾"	1¼"	13"	M	4
I	fillers	⅜"	⅜"	**	M	12
J	bottom	¼"	12¼"	26¾"	MP	1
K	long glass stops	¼"	⅜"	26½"	M	4
L	short glass stops	¼"	⅜"	11½"	M	4
M*	case top front/back trim	¾"	3½"	32½"	M	2
N*	case top side trim	¾"	3½"	18"	M	2

*Parts initially cut oversize. See the instructions.
**Length varies. See the instructions.

Materials key: M–mahogany, EM–edge-glued mahogany, MP–mahogany plywood.

Supplies: #8×1¼" flathead screws, ¾" brad nails, ¼" dowels, figure-8 fasteners (4), 12×19¼" single-strength glass (2), 19¼×26¾" single-strength glass (2), ¼×11¾×26¼" glass (1).



H

Cut the cove profiles, making a pass on each workpiece [both ends of the top (E), and outside edges of the trim (M, N)]. Raise the blade 1/16" between passes.

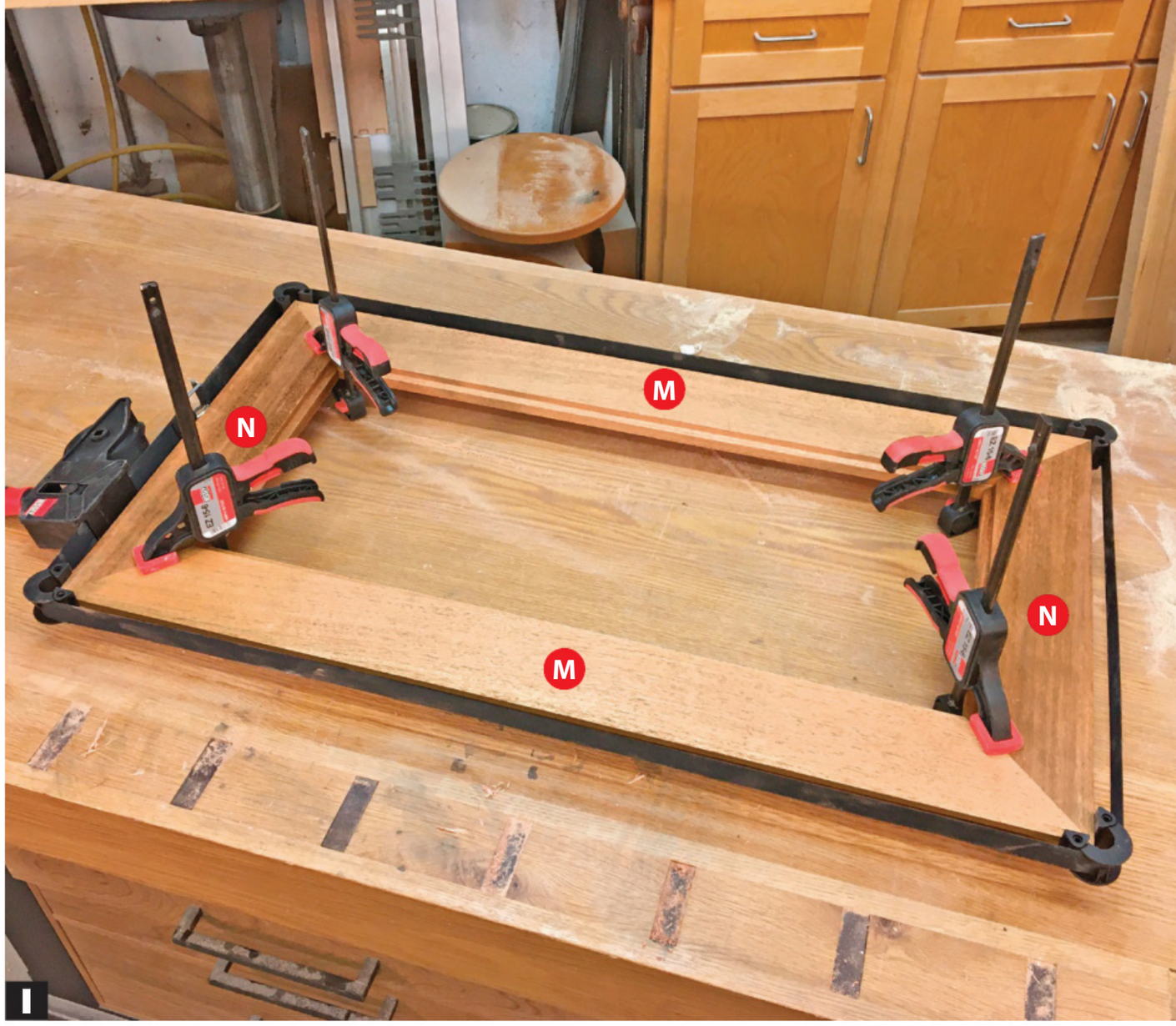

I

Glue and clamp the top trim (M, N) into a frame. Use small clamps at each miter to keep the parts aligned.

Cutting Diagram



1½ x 7¼ x 72" Mahogany



¾ x 3½ x 96" Mahogany



¾ x 5½ x 72" Mahogany

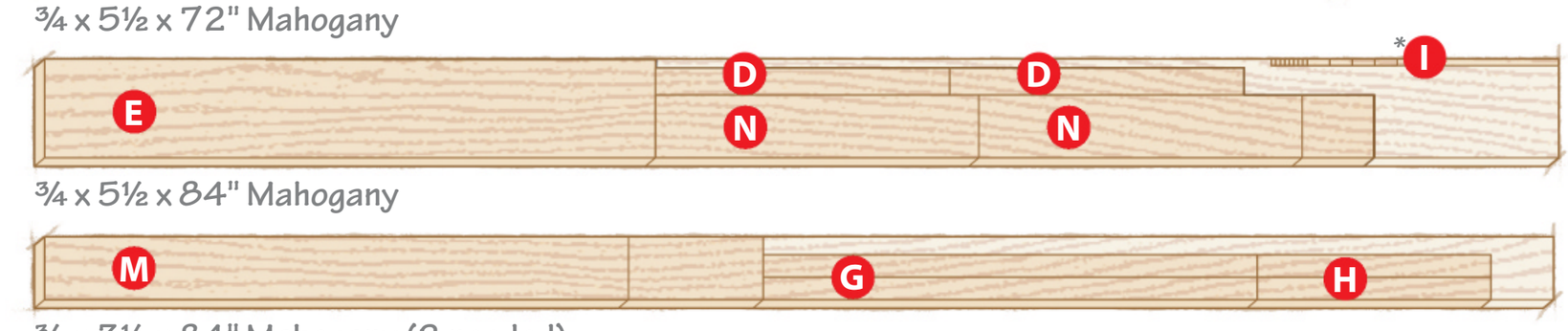

¾ x 5½ x 84" Mahogany

¾ x 3½ x 84" Mahogany (2 needed)



¼ x 3½ x 48" Mahogany



¼ x 24 x 48" Mahogany plywood

This project requires 6 board feet of 6/4 mahogany, 10 board feet of 4/4 mahogany, 2 square feet of ¼" mahogany, and a quarter sheet of ¼" mahogany plywood.

Produced by **Zach Brown** with **Brian Bergstrom**
Project design: **Kevin Boyle**
Illustrations: **Roxanne LeMoine, Lorna Johnson**

Japanese Hand Planes

Turn the plane around.
We're pulling for ya.

Because they look different than steel-body Western planes, Japanese hand planes (*kanna*) may seem like primitive mystery tools used only by esoteric craftsmen. Converts from Western hand planes insist the steel in a Japanese plane provides a smoother finish on their work, with additional tactile feedback and an intimate connection with the workpiece. And, not to get all mystic, but the Zen-like experience and satisfaction of seeing a paper-thin ribbon of wood float out from a tool you carefully tuned is surprisingly rewarding.

To dismiss Japanese hand planes as a possible addition to your hand-tool collection means overlooking their benefits. Let's take a closer look at these neo-ancient tools and see if one or more might be in your future.



A

Some Japanese planes have soles about the same size as Western planes.

▶The body of a Japanese plane is called a *dai* (pronounced "die").

Why do they look like that?

Other than appearance, the most striking difference between these and Western planes is the direction of planing: Japanese planes cut on the pull stroke, similar to Japanese saws. Though they provide no totes or knobs, they perfectly suit a two-handed grip [**opening photo**]. A longer sole ahead of the blade helps steady the plane on the workpiece at the start of the stroke.

Their simple design, without mechanical blade adjusters, has changed little over hundreds of years. You adjust the blade depth and lateral position by tapping it with a mallet.

Unlike Western planes, where the footprint of the sole determines their primary usage, Japanese planes are classified by their blade width, with wider blades intended for smoothing wide panels. Still, you can find them in sizes similar to Western planes [**Photo A**]. But note: Japanese "block planes" differ from Western block planes, serving instead as small smoothing planes.

The blade makes the plane

Better-quality Japanese planes feature blades—and often chip breakers—forged by highly skilled blacksmiths [**Photo B**]. In fact, when shopping for a Japanese hand plane, you'll find them categorized by the blacksmith's name. Each blade-maker uses a unique combination of forging techniques and metals that make his blades unique. Some blade-makers have such a reputation

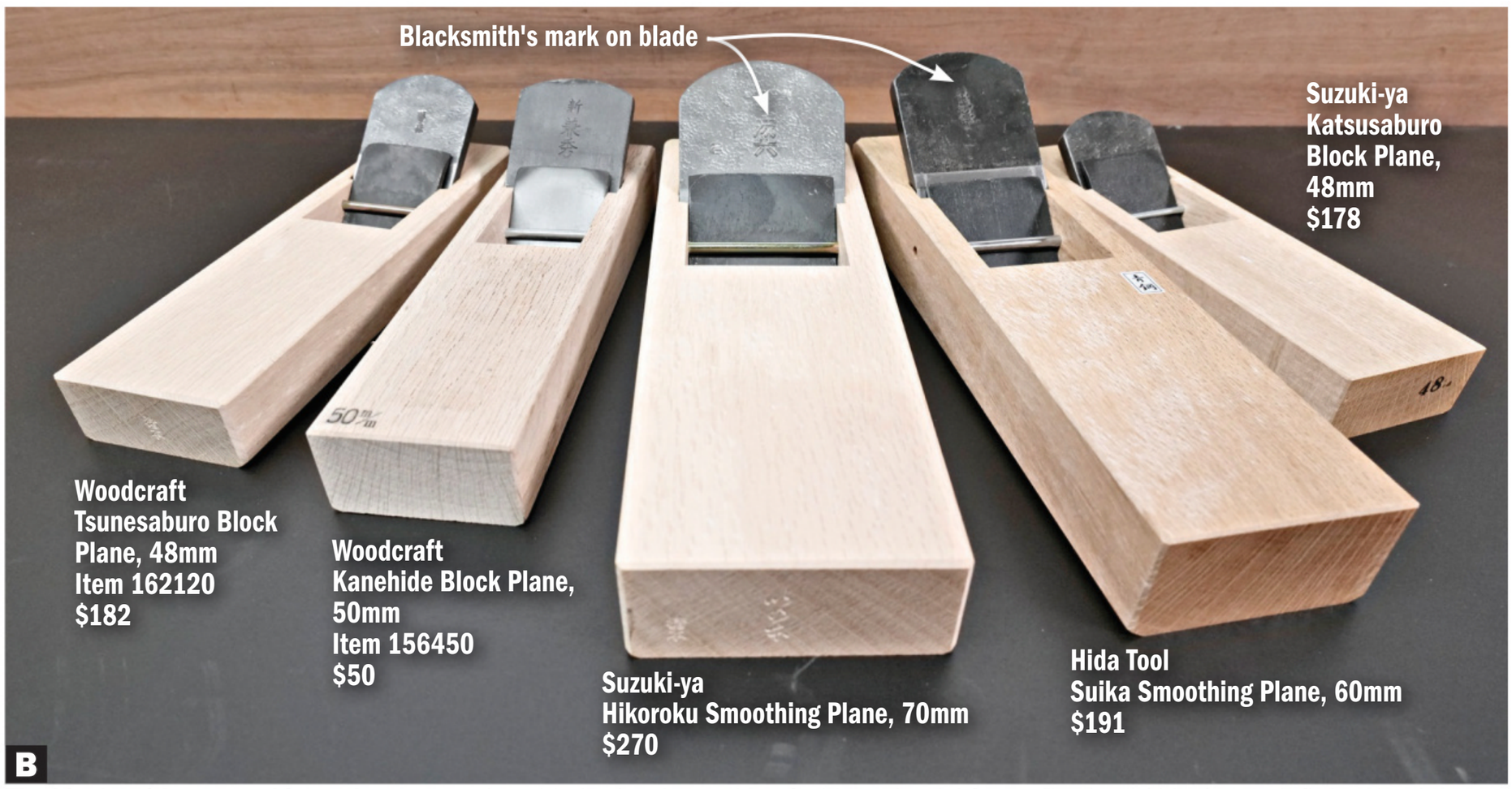

B

The blacksmith stamps his mark on every plane blade. Another artisan fashions the dai from a hardwood blank, rough-fitting the throat for the blade.

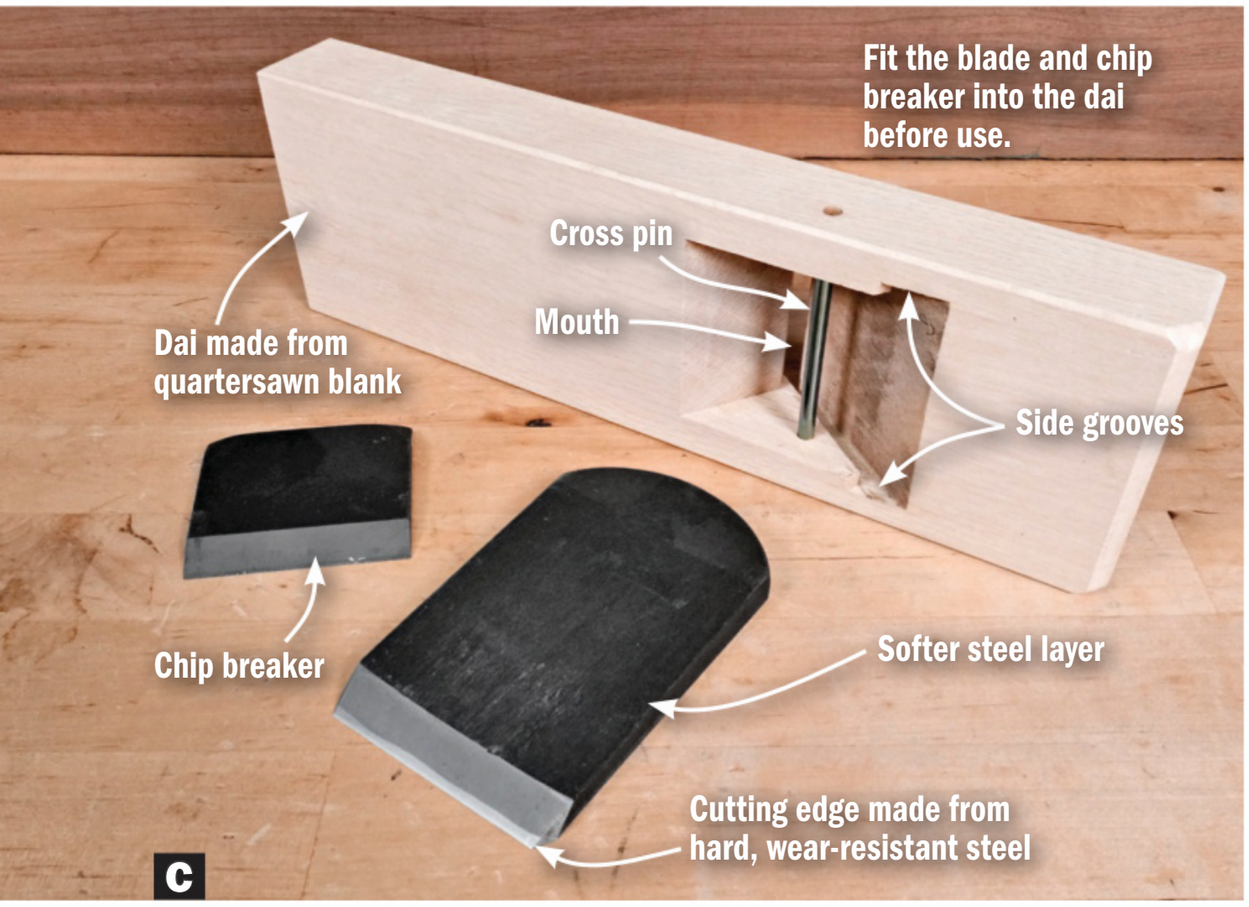

The thick, sharp blade and chip breaker work as a team to create thin shavings when properly fit into the dai.

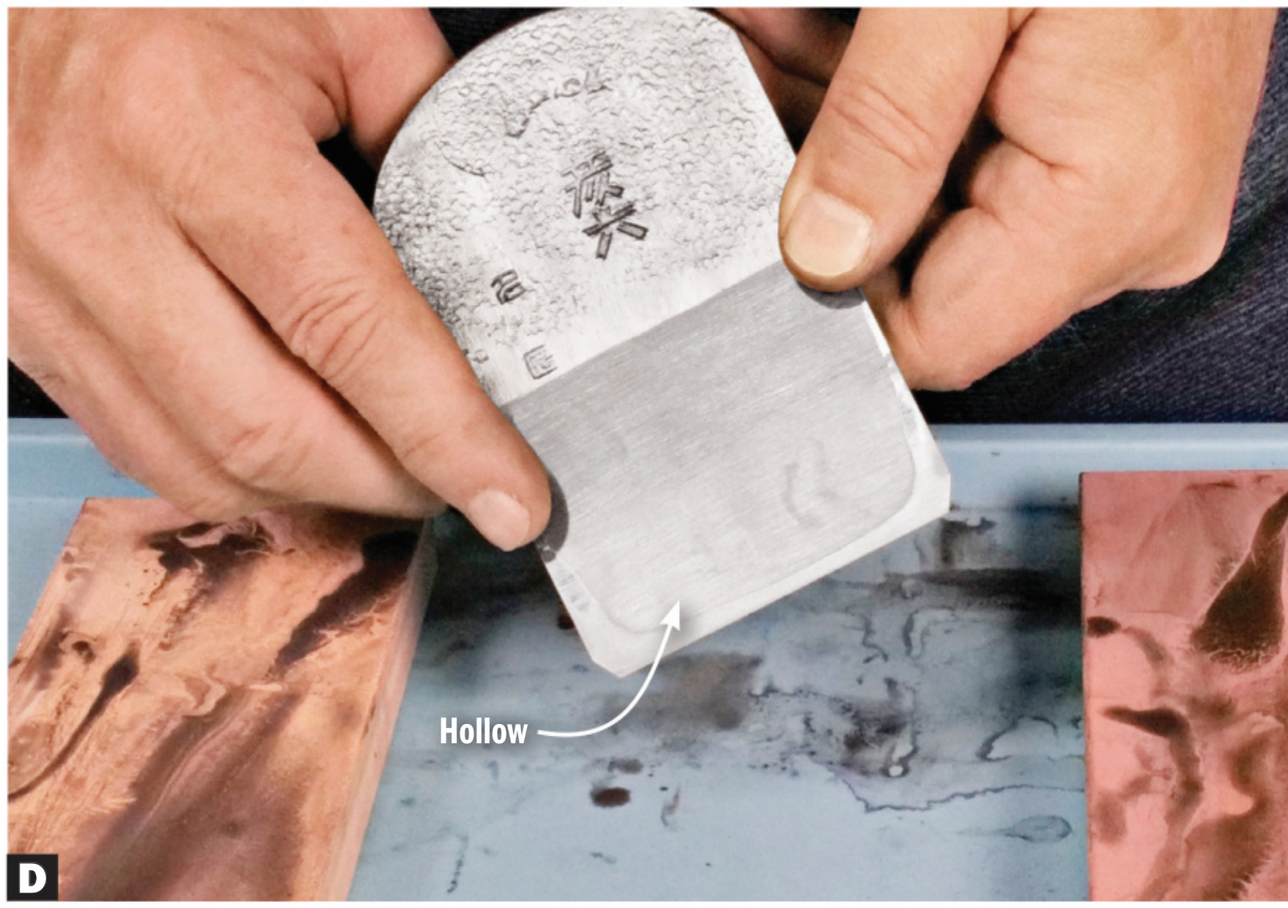

The hollow reduces the surface area contacting the sharpening stone, making flattening the back of the blade easier before sharpening the bevel.

for quality that their planes cost well over $1,000. Don't fret; you can find perfectly suitable planes for no more than you would spend on a new Western plane.

The blacksmith starts with a hard, but brittle, steel for the cutting edge. To offset the brittleness and add mass that dampens vibration while planing, the blacksmith laminates a softer steel on top. The thick blade holds a super-sharp cutting edge, the hallmark of a Japanese hand plane [**Photo C**].

The blade differs from that on a Western plane in other ways, too. For example, the wedge-shaped blade tapers in thickness, which helps hold it in place. Also, a hollow on the back of the blade reduces the amount of material to remove when flattening the back—the first step in the sharpening process [**Photo D**]. The two narrow strips along the edges of the blade and the area directly behind the cutting edge form a flat reference surface. This helps ensure a sharp cutting edge but also provides the foundation for a tight-fitting chip breaker.

The sole of a Japanese plane contacts the workpiece at only two points ahead of the blade, with a hollow of about 1/64" between them [**Drawing**]. An optional third contact point at the shorter end of the dai keeps the plane from tipping at the end of the stroke and is helpful when planing narrow stock. Note: Since the plane cuts on the pull stroke, the front and back of the plane are opposite of Western planes.

▶Watch a video on how to set up a Japanese hand plane. woodmagazine.com/japaneseplane

Fitting and fettling

When you purchase a new Japanese hand plane, you receive a kit of parts. First, remove and sharpen the blade. As with sharpening any blade, flatten and polish the back before focusing on the bevel.

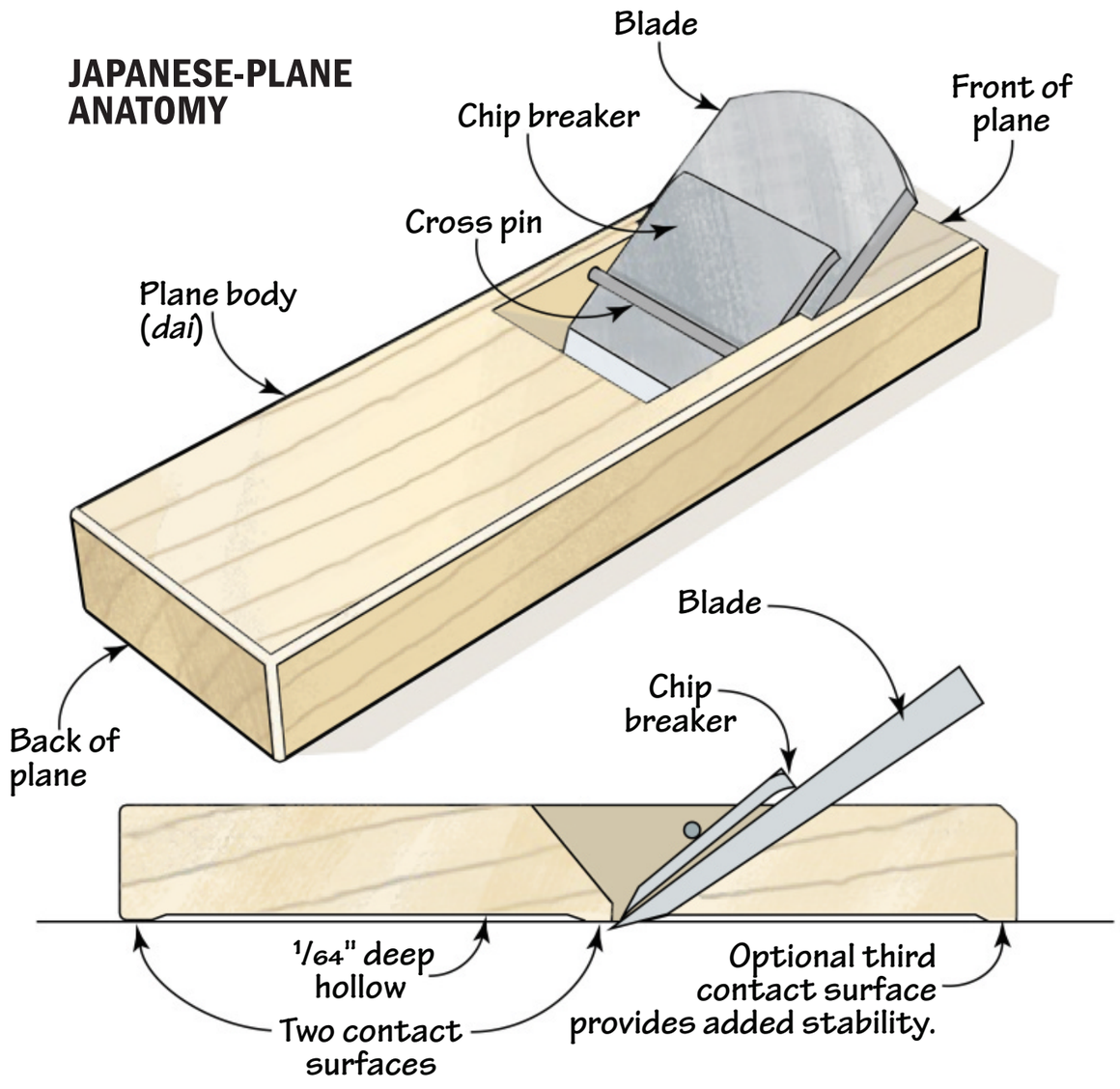



When removing high spots from the side grooves, concentrate on the upper end only, keeping the width at the mouth intact.



Space on each side of the blade permits lateral adjustment to keep the cutting edge parallel to the sole.

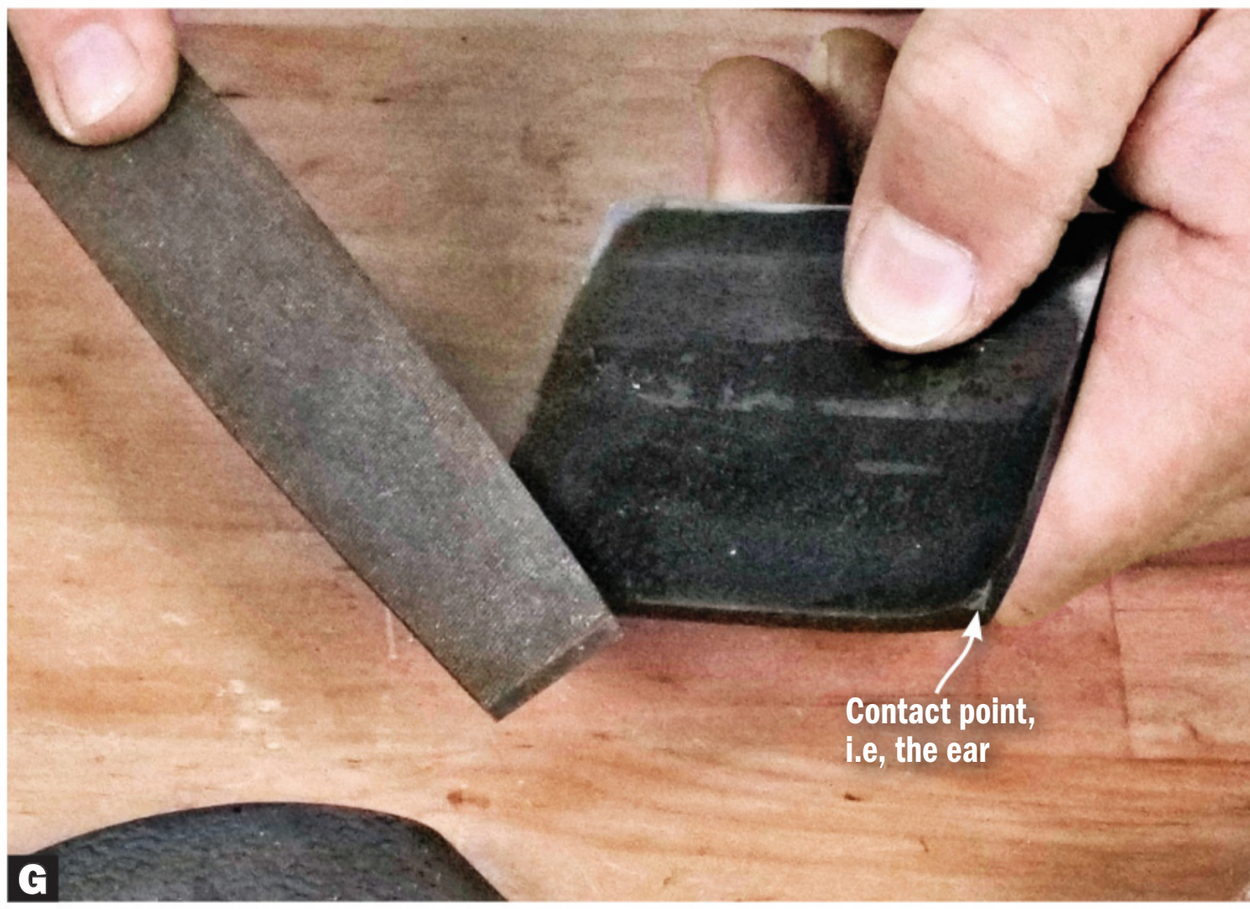

File and smooth the chipbreaker so it sits flat on the blade without gaps at the cutting edge.

Out of the box, the blade seats too high in the throat, so adjust the mouth of the dai using plane floats, small rasps, files, or a sharp chisel [**Photo E, Sources**]. Darken the blade back with a soft pencil, then test the fit. Graphite left behind in the throat indicates high spots that need further trimming.

Keep repeating this process, removing the high spots in the throat until the cutting edge of the blade drops to within a couple of millimeters above the mouth opening. With the depth of the blade almost set, continue to file the side grooves until they allow no more than 1/16" of space for lateral blade adjustments [**Photo F**].

A hand-forged blade and chip breaker may not fit together perfectly at first. If the chip breaker rocks or "rattles" against the blade when applying pressure at the corners, file material from the point of the "ear" on the back where it contacts the blade [**Photo G**]. Work slowly and keep checking your progress until the chip breaker sits flat.

Finally, flatten the back side of the front edge of the chip breaker and check the fit on the blade. You shouldn't be able to see any light between them at the cutting edge. Using fine sharpening stones, hone the beveled leading edge so that shavings easily glide over it. You want a smooth edge and polished surface so shavings slide up and out of the throat, but the edge doesn't need to be razor sharp.

Install the blade and chip breaker and adjust the depth until the blade nearly protrudes through the bottom of the dai. This stresses the dai as it will be during use, so check the bottom of the dai for flatness using a straightedge. If the dai needs work, sand the bottom on a flat reference surface, such as a piece of float glass, until flat.



Sight along the sole to judge the blade protrusion and parallelism to the sole. Make test cuts and adjust the blade until you get full-width, onion-skin-thin shavings that leave a smooth surface.

Form the slight hollows [**Drawing**] using a card scraper or wide chisel until you see a thin line of light under a straightedge. Since you're removing so little material, this process takes almost no time at all.

Finally, set the depth and lateral position of the cutting edge with light taps on the blade [**Photo H**]. Then tap the chip breaker firmly in place before planing.

Why bother?

By now you may be wondering why anyone would go through all this fuss to set up a Japanese hand plane. But after you do it once, it becomes second nature. And, if this process makes you nervous, your tool vendor can point you in the right direction for additional guidance. The time you dedicate to learning how to finesse a plane for ultimate performance will be rewarded.

▶ Buy tools to tune your hand plane.
woodmagazine.com/planetools

Sources:

Suzuki-ya
510-409-0217
suzukitool.com

Hida Tool & Hardware Co.
510-524-3700
hidatool.com

Woodcraft
800-225-1153
woodcraft.com

Plane floats and rasps:
Lee Valley
800-871-8158
leevalley.com

Produced by **Randy Maxey**
Illustration: **David Kallemyn**

Pocket Hole in One

If your pocket-hole drilling setup seems subpar, putter around in the shop for a weekend building this overachieving organizer.

Besides a large, stable platform for supporting workpieces, this fixture also provides ample storage for screws, bits, and accessories. When you finish using it for the day, hang it conveniently out of the way.

DIMENSIONS:
29" W × 10" D × 5½" H

Approximate materials cost:
$80
Pocket-hole jig not included

16
Pocket screws used to build this project



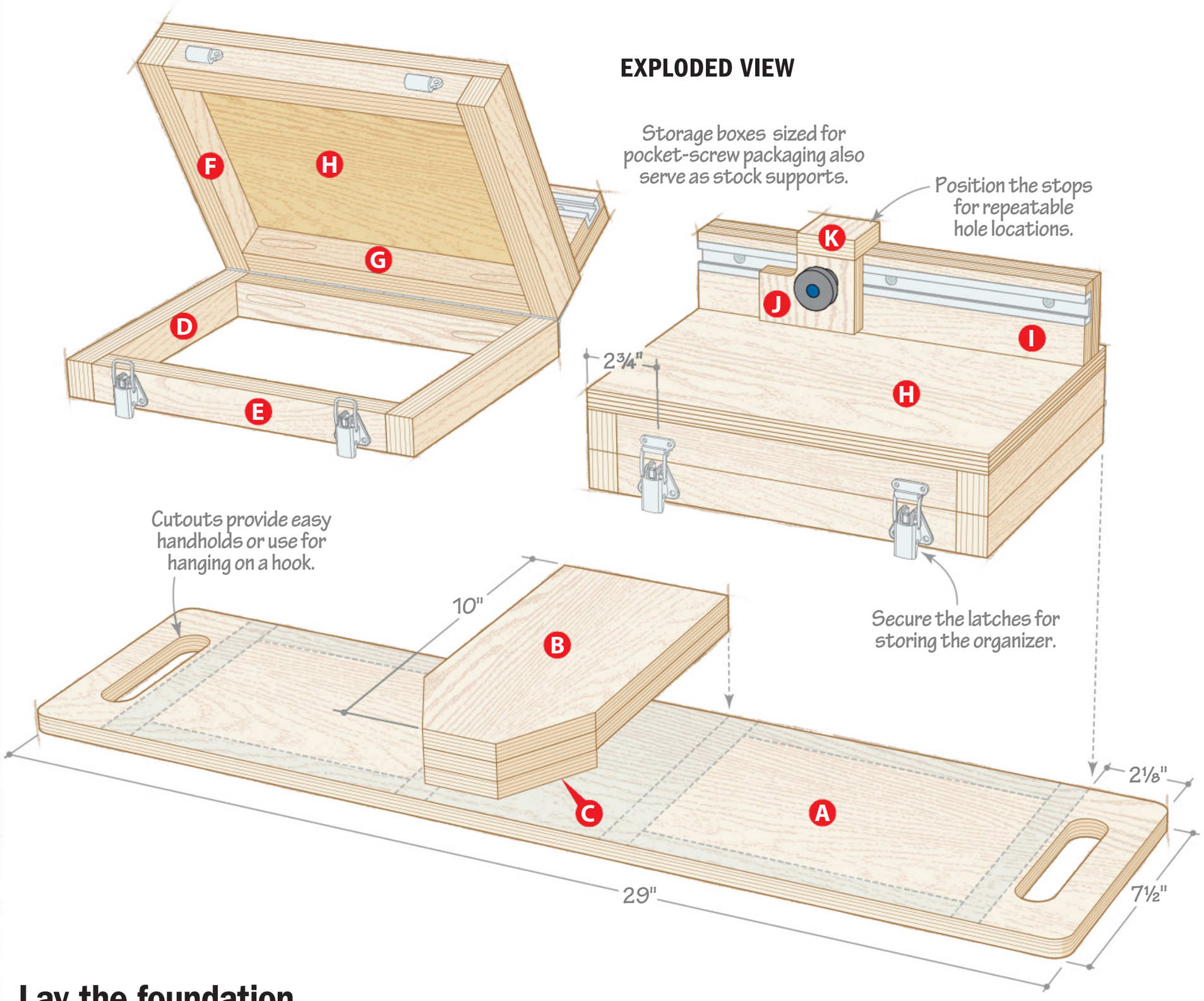

Lay the foundation

This organizer consists of three main components: a base, the storage boxes, and the fences [**Exploded View**]. We sized the base for the Kreg 720 pocket-hole jig (available at online and retail sources). If you own a different brand or model, you may have to modify the base and riser dimensions to accommodate it.

1 Cut to size the base (A) [**Materials List, Exploded View**]. Lay out and cut the handle openings at each end [**Photo A, Drawing 1**]. Sand the openings smooth and radius the corners of the base.

1 HANDLE DETAIL

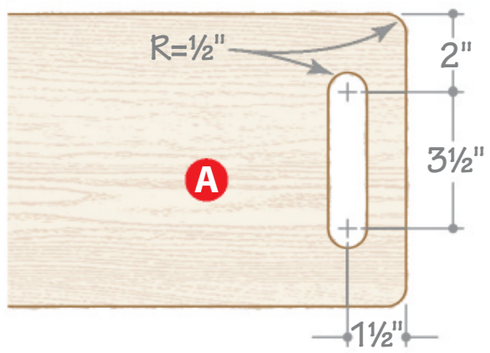

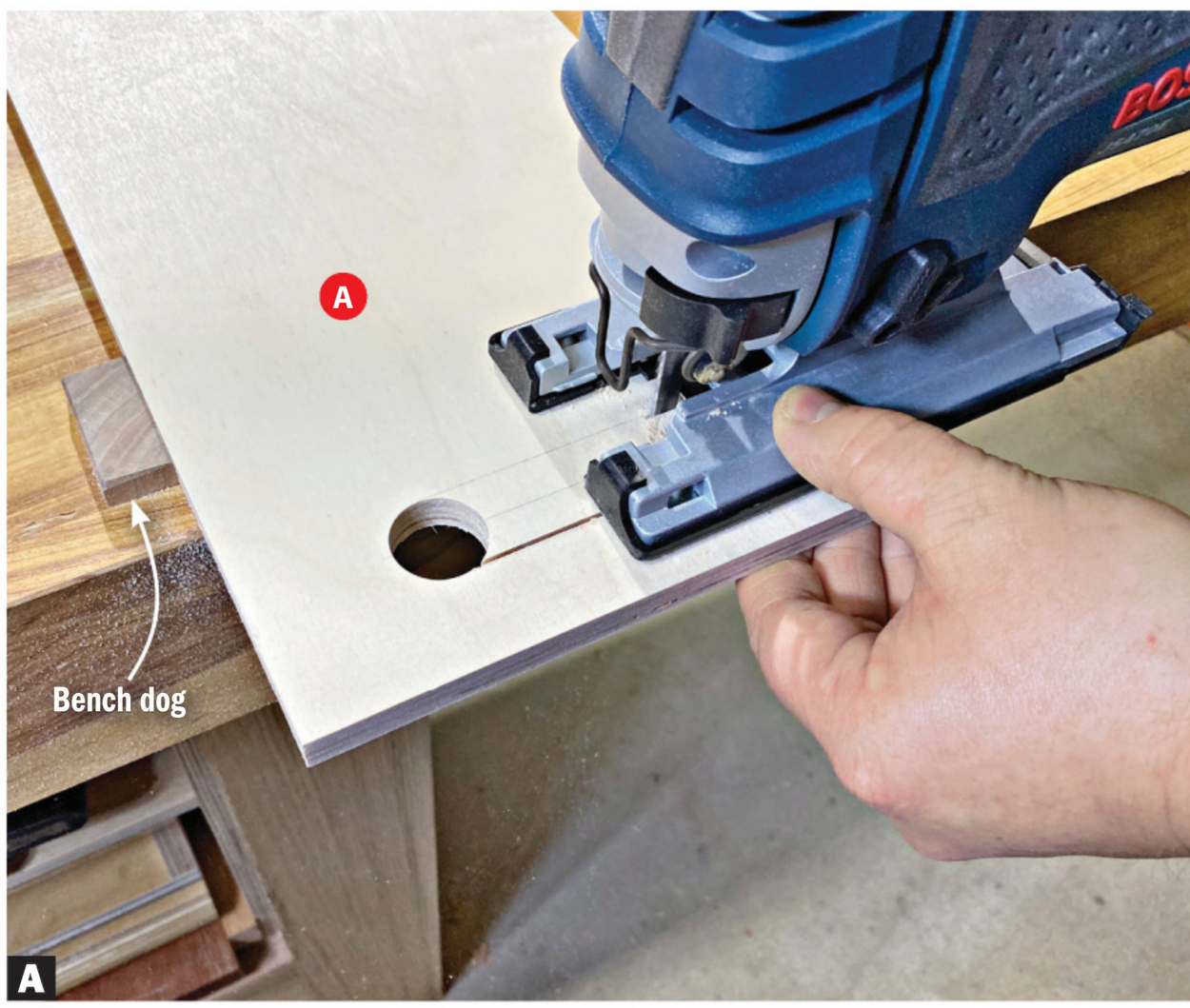

Drill out the ends of the handle opening with a 1" bit, backing up the workpiece with scrap to avoid blow-out. Then jigsaw away the waste between the holes.

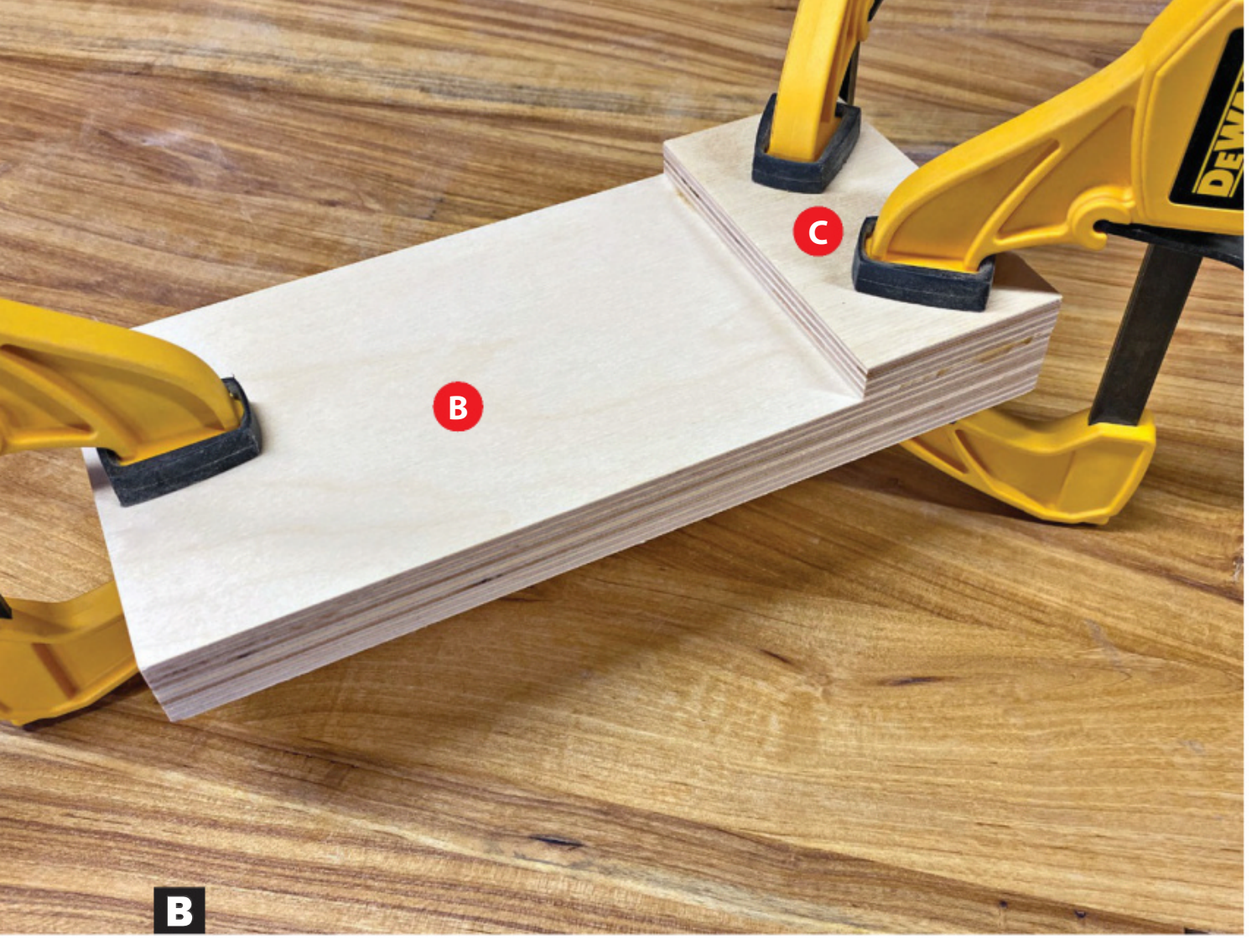

Keeping the edges flush, glue and clamp the filler (C) to one end of the riser (B).



To account for variations in plywood thickness, measure the height of the riser (B) to determine the width of the box sides, fronts, and backs (D, E).

▶Laminate: Glue two workpieces face-to-face.

2 Cut to size and laminate two pieces of ½" plywood for the riser (B) [**Materials List**]. Cut to size a blank for the filler (C) and glue it to the riser [**Photo B**].

3 With the glue dry, jigsaw the end of the riser/filler assembly (B/C) to final shape and sand smooth [**Drawing 2**].

4 Center the riser/filler assembly on the base (A) and glue and clamp it in place [**Exploded View**].

Boxing match

1 Measure the height of the riser [**Photo C**]. Using this dimension as the width, cut the box sides, fronts, and backs (D, E) to size [**Drawing 3**].

2 Drill pocket holes in the ends of the box fronts/backs (E), then glue and screw together the two box assemblies. Finish-sand the assemblies and glue them to the base and riser [**Exploded View**].

2 RISER/FILLER ASSEMBLY

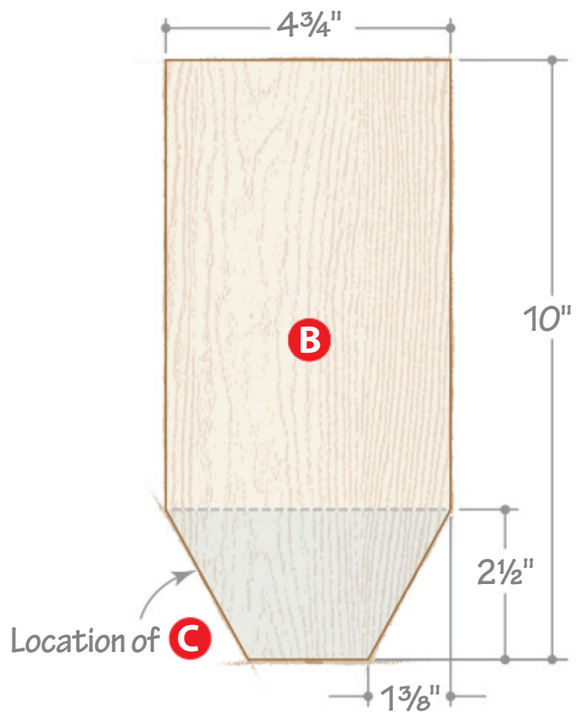

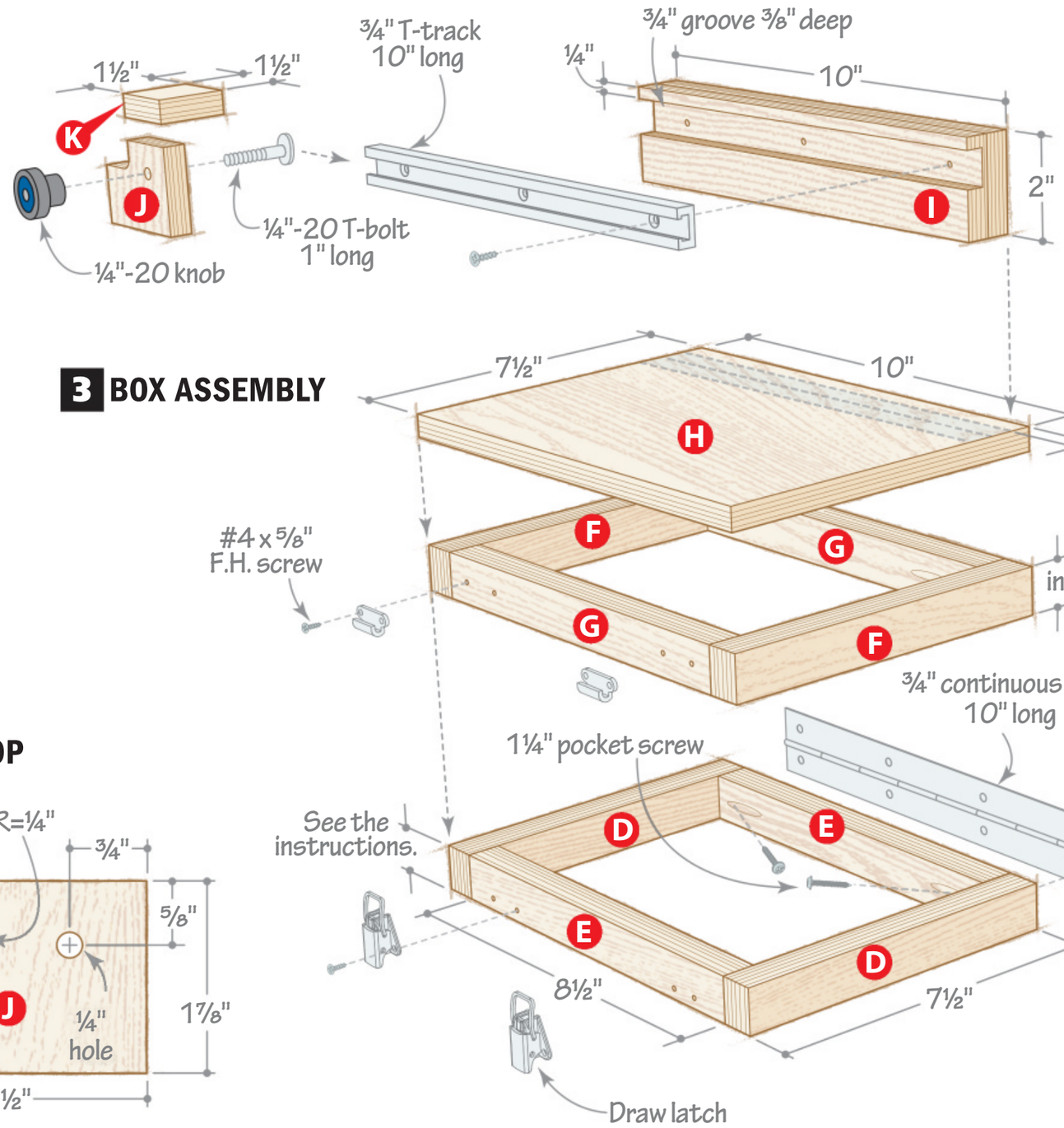

3a STOP

3 Place a scrap of ½" plywood on top of one of the box assemblies. Rest your pocket-hole jig on the riser (B/C) and measure from the face of the plywood scrap to the work-surface of the pocket-hole jig. Using this dimension as the width, cut to size the lid sides, fronts, and backs (F, G) [**Drawing 3**].

4 Assemble the lids as you did the storage boxes. Then, cut to size the lid tops (H) and glue them to the lid assemblies. Finish-sand the lids.

Don't fence me in

1 From ½" plywood, cut four blanks for the fences (I) [**Materials List, Drawing 3**]. Laminate each pair of blanks.

2 Using a dado blade, cut a groove in the face of each fence to accept the T-track [**Drawing 3, Sources**].

Tip! *Don't own a dado blade? Cut the groove for the T-track by making multiple passes with a standard blade, moving the rip fence after each cut.*

3 Glue the fences to the lid assemblies, positioning them as shown [**Drawing 3**].

4 Cut a 2½×6" blank from a piece of ½" plywood for the fence stops (J). Lay out the shape and hole locations for the stops at both ends of the blank [**Drawing 3a**]. Drill the holes [**Photo D**] and cut the stops to shape.

5 Cut the stop tops (K) to size. Glue the tops to the stops to create two mirrored, L-shape stop assemblies [**Exploded View**].

Add some hardware

1 Finish-sand the remaining parts to 150-grit. Apply a finish to all components. (We sprayed on a lacquer finish.)

2 With the finish dry, cut the T-track and continuous hinges [**Sources**] to length [**Drawing 3**]. Screw the T-track into the grooves in the fences. Attach the lids to the boxes with the continuous hinges.

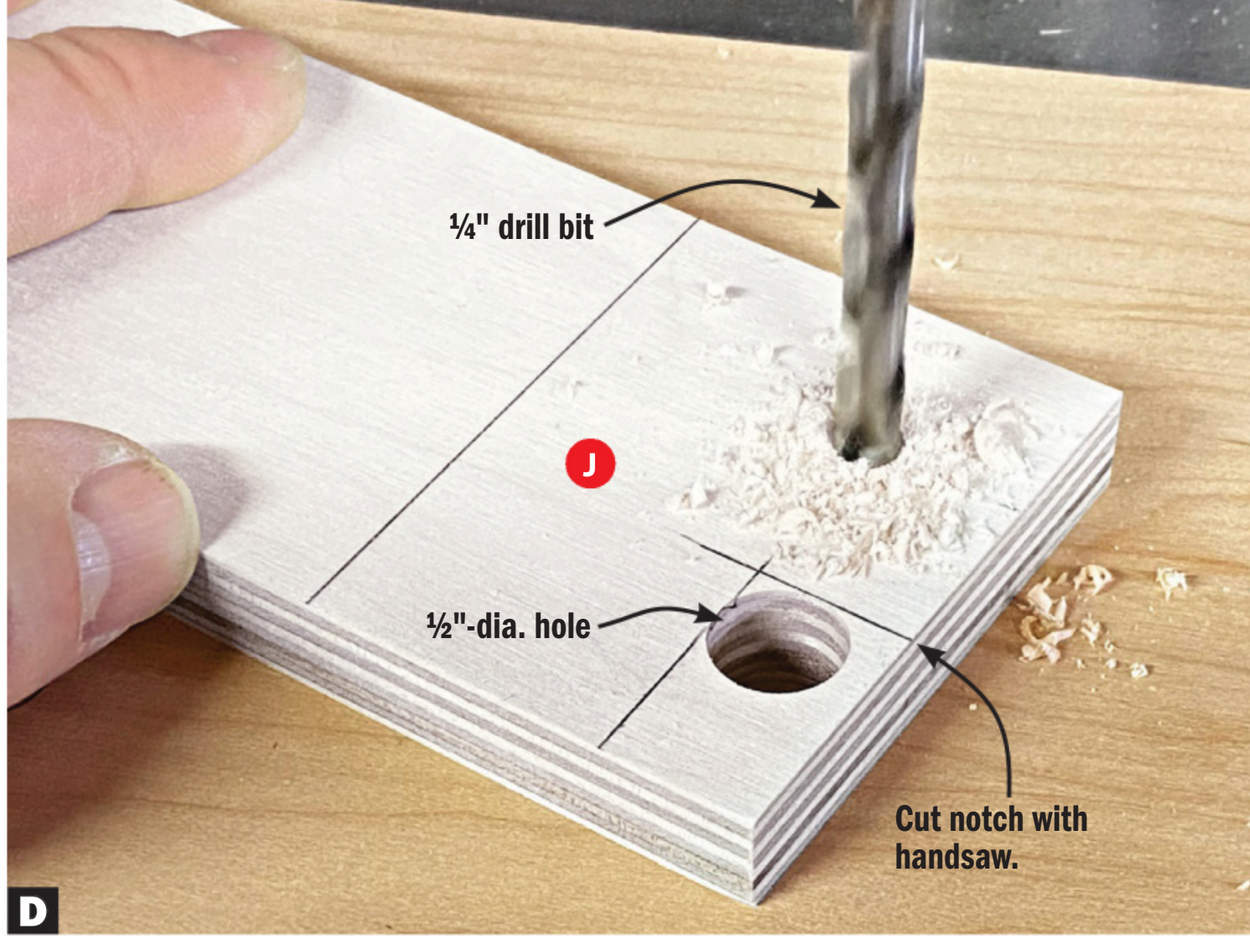

Keep your fingers a safe distance from the bit when drilling the holes for the stops (J). After forming the notch, cut the stop from the blank.

3 Install the draw latches [**Sources**] on the front of the boxes and lids [**Exploded View, Drawing 3**]. Attach the stops with T-bolts and knobs [**Sources**].

4 Place your pocket-hole jig on the riser (B) and center it between the two box assemblies. Clamp a straightedge or straight board across both fence assemblies and align the jig with the board. Mark the location of the jig on the riser and remove the board. Flip open the box lids and open the support wings on the pocket-hole jig to expose the mounting screw holes. Screw the jig to the organizer, then fold the support wings in. After testing the alignment, you're ready to take your pocket-hole jig for a spin.

▶ Make easy work of installing continuous hinges. woodmagazine.com/pianohinge

Cutting Diagram

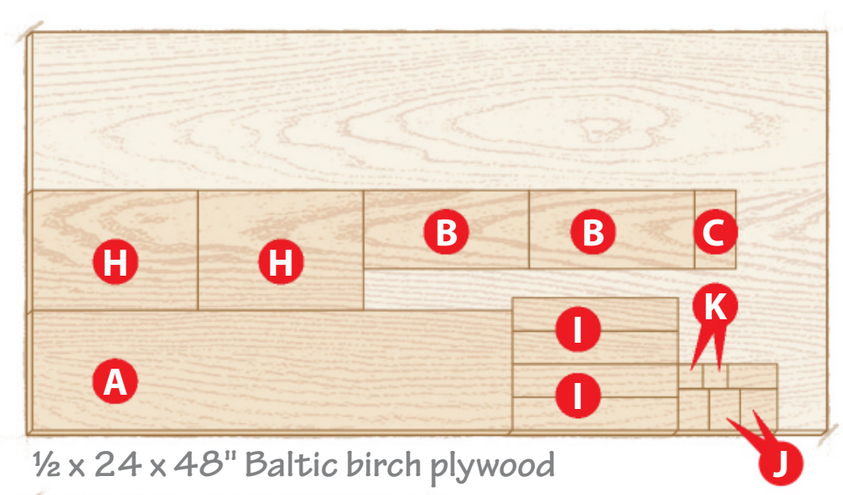

Materials List

Part		FINISHED SIZE T	W	L	Matl.	Qty.
A	base	½"	7½"	29"	Ply	1
B	riser	1"	4¾"	10"	LP	1
C	filler	½"	4¾"	2½"	Ply	1
D	box sides	¾"	*1"	7½"	Ply	4
E	box fronts/backs	¾"	*1"	8½"	Ply	4
F	lid sides	¾"	*1"	7½"	Ply	4
G	lid fronts/backs	¾"	*1"	8½"	Ply	4
H	lid tops	½"	7½"	*10"	Ply	2
I	fences	1"	2"	*10"	LP	2
J	stops	½"	2½"	1⅞"	Ply	2
K	stop tops	½"	1½"	1½"	Ply	2

*Approximate dimension. Cut parts to fit. See the instructions.

Materials key: Ply–Baltic birch plywood, LP–laminated plywood.

Supplies: #6×⅝" flathead screws, 1¼" pocket screws.

Blade: Dado set.

Sources: 2' T-track (1) no. 22104, $15; 1½×36" nickel continuous hinge (1) no. 30085, $20; 1×¼"-20 round knobs (2) no. 58088, $3 each; 1×¼"-20 T-bolts (pack of 5) no. 31969, $5, Rockler, 800-279-4441, rockler.com.

Draw latches (2) no. 1889A34, $5.46 each, McMaster-Carr, 562-692-5911, mcmaster.com.

Produced by **Vince Ancona** with **John Olson**
Project design: **John Olson**
Illustrations: **Roxanne LeMoine, Lorna Johnson**

Minimize Shop Noise

Share your work, not the racket.

Reducing the howl of power tools to acceptable levels outside the shop goes a long way toward keeping the peace in your household and the neighborhood. Whether you are planning a new shop, or working in an existing space, you can improve walls and ceilings to make your shop far friendlier to outside ears.

But just as auto racers have the saying, "How fast can you afford to spend?" one can ask about sound reduction, "How quiet can you afford to build?" By not shooting for recording-studio-level soundproofing, you can achieve meaningful levels of noise reduction at a reasonable cost. Choose and combine the strategies outlined here to best suit your budget and shop space, and make sure your planned modifications meet local building codes before you begin.

Note: *These strategies mitigate sounds down to about 125Hz (the 2nd B below middle C, if you have a keyboard), but most shop noise falls above that.*

Outer drywall installed vertically

Inner drywall installed horizontally

Insulation

Staggered-stud construction

Sound-isolation clip

Hat channel

You make a lovely decouple

As you may remember from junior-high science class, sound consists of vibrations, and louder sounds contain more energy. Consider how this energy interacts with a typical interior wall of ½"-thick drywall screwed to opposite edges of 2×4 studs [**Drawing 1**]—essentially, a taut drum. The studs join the two surfaces, creating one assembly. Noise striking one face vibrates this assembly, and the sound travels easily through the wall.

To reduce this "drum effect," you need to *decouple* the two wall faces. If you're planning a new home or an addition for your shop, consider placing lesser-used rooms between the living space and shop [**Drawing 2**]. But for an existing shop, try these strategies for decoupling walls.

With the first strategy—staggered-stud construction—drywall touches only one edge of the studs, not both [**Drawing 3**]. Sound transmission through the air cavity remains, but the two walls can't vibrate as one unit.

To stagger studs in a new wall, use a 2×6 sill plate and header with 2×4 studs. On an existing wall, remove the drywall from one face, add 2×2 furring strips to the sill plate, header, and around door and window frames, then toenail new studs centered between the existing studs and flush with the outside faces of each furring strip. (We'll address reinstalling drywall in a bit.)

Note: *Many of these strategies require removing existing drywall from at least one face of a wall so you can access the framing.*

▶ See **Deal with doors and windows** later in this article for additional important information about framing walls.

1 COUPLED WALL Top View: Typical construction

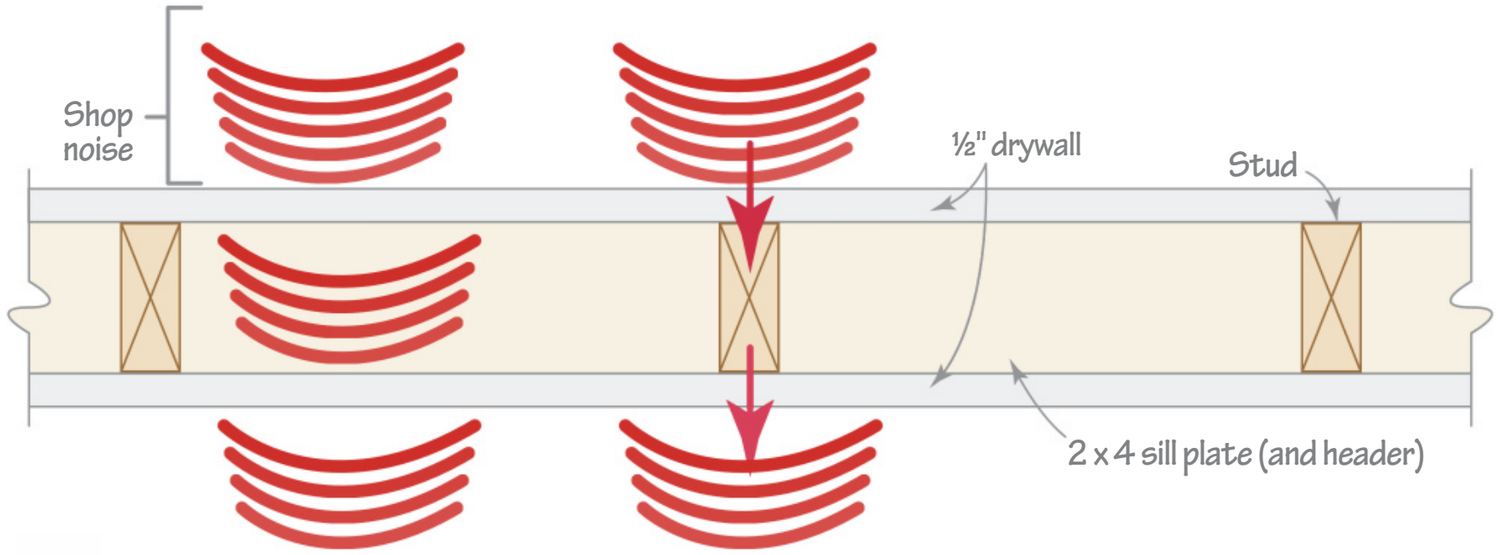

2 ROOMS AS DECOUPLING SPACE

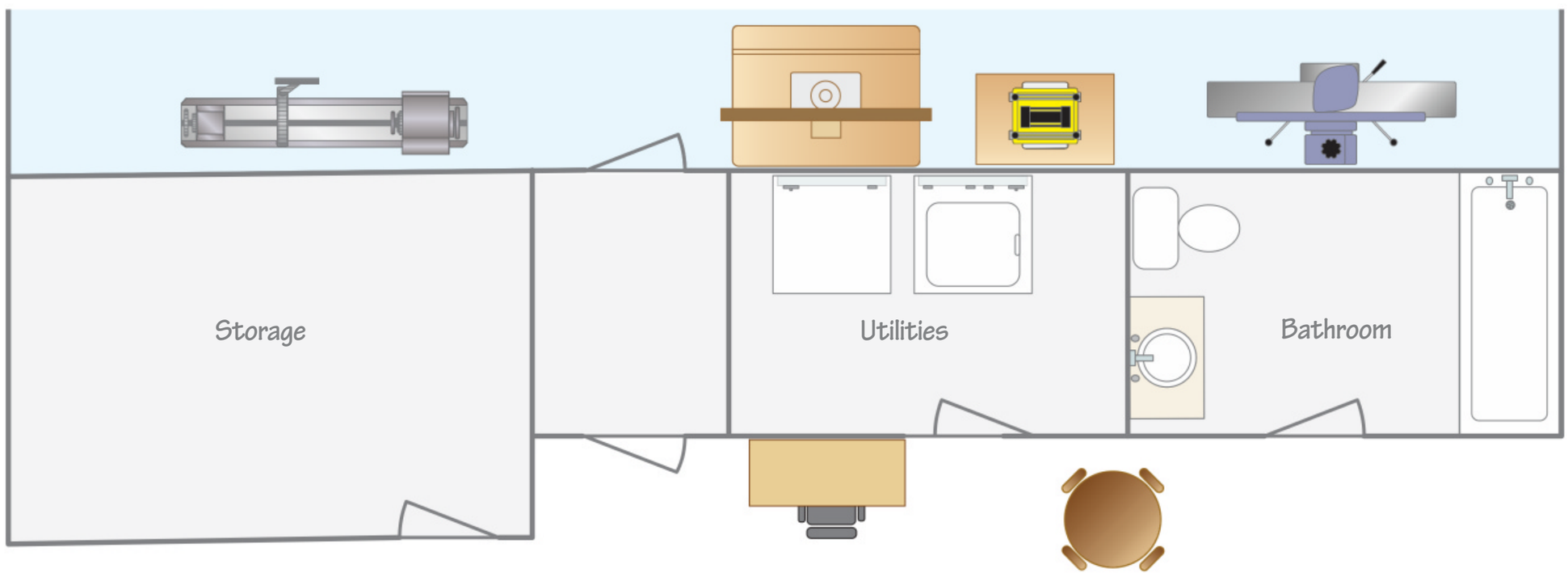

3 DECOUPLED WALL Top View: Staggered studs

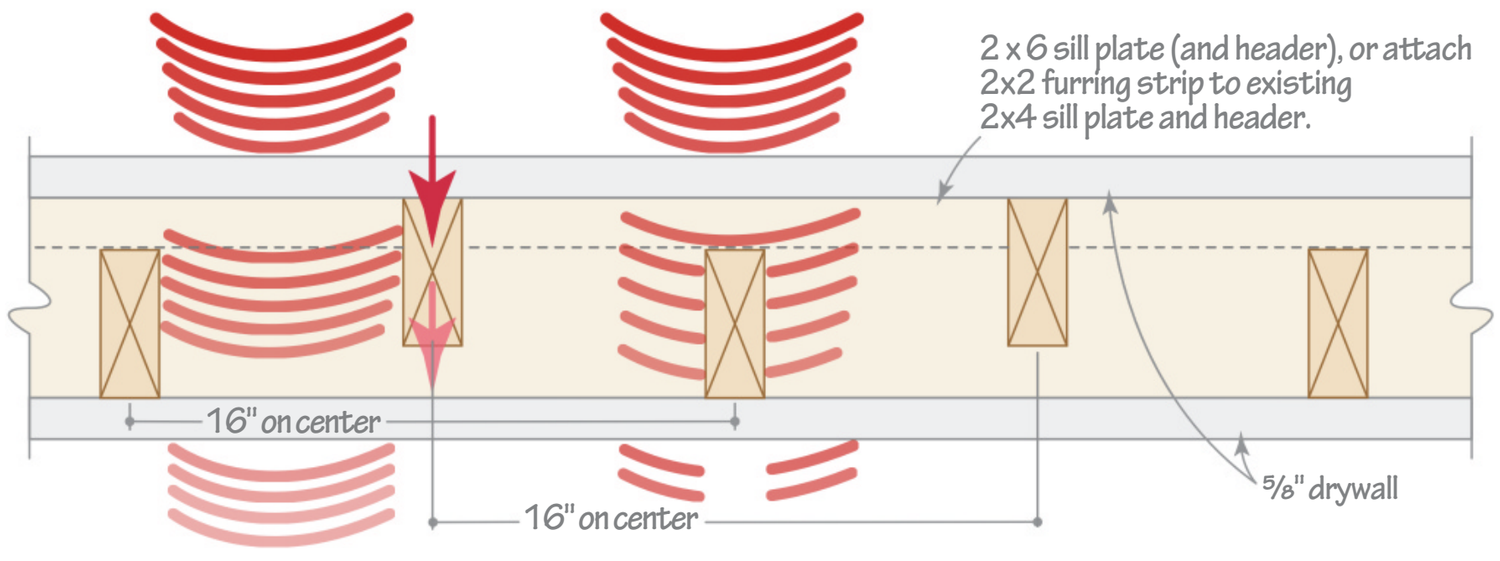

4 DOUBLE WALL

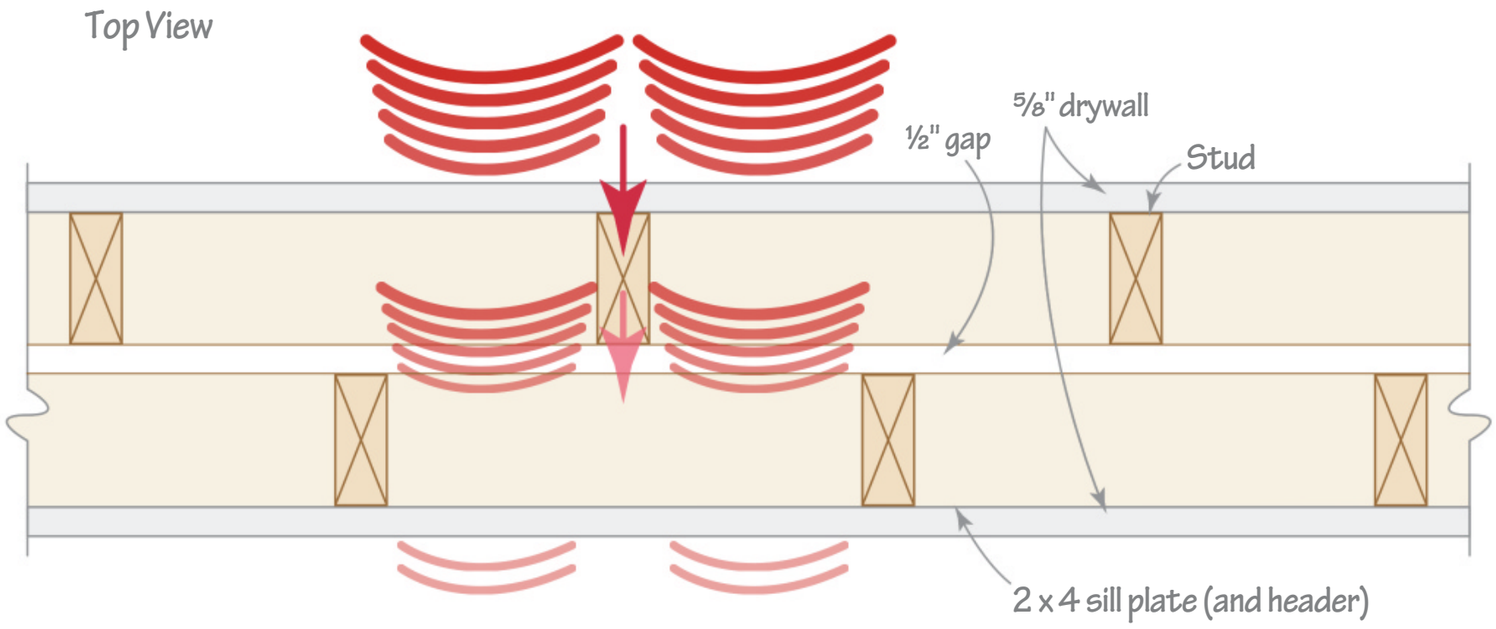

Taking this approach one step further, double walls with an air gap between them provide fully separated framing, so the vibration of one wall can't transfer directly to the other [**Drawing 4**]. Of course, the extra wall eats up floor space as well as sound.

For further decoupling of walls and for ceilings, 25-gauge hat channel (also called drywall furring channel, and available in home centers), held by stud- or joist-mounted clips [**Source**], minimizes contact between the drywall and framing [**Photo A, opening photo**]. The downside: Using hat channel on walls prevents screwing heavy items, such as cabinets or tool racks, to the studs, as that defeats the purpose of the channel.

Tip! *Add two layers of drywall over hat channel for increased sound reduction.*

Dampen with more mass

The covering of a wall or ceiling also affects how much sound passes through. By using material that adds mass, sound energy can't move the surface as much.

The simplest way to add mass to walls and ceilings is to install heavier drywall. Using ⅝" sheets (70 lbs per sheet) instead of ½" (50 lbs per sheet) knocks down some sound, as shown in **Drawing 3**. Applying two layers to each side of a wall further increases mass [**Drawing 5, opening photo**]. Sound will leak through gaps where drywall sheets meet, so use the longest panels practical to reduce the number of seams, then stagger those seams between layers. Save time and money by taping and mudding only the outer layer.

Although more expensive, replacing the inner drywall layer with ¾" oriented strand board (OSB, 73 lbs per sheet) or 1" plywood (80 lbs per sheet) allows you to drive a screw anywhere when hanging items on the wall.

After adding a layer to an existing wall, extend electrical boxes so switches and receptacles sit flush with the new surface [**Photo B**]. If you add hat channel to a wall, you may need to install deeper boxes.

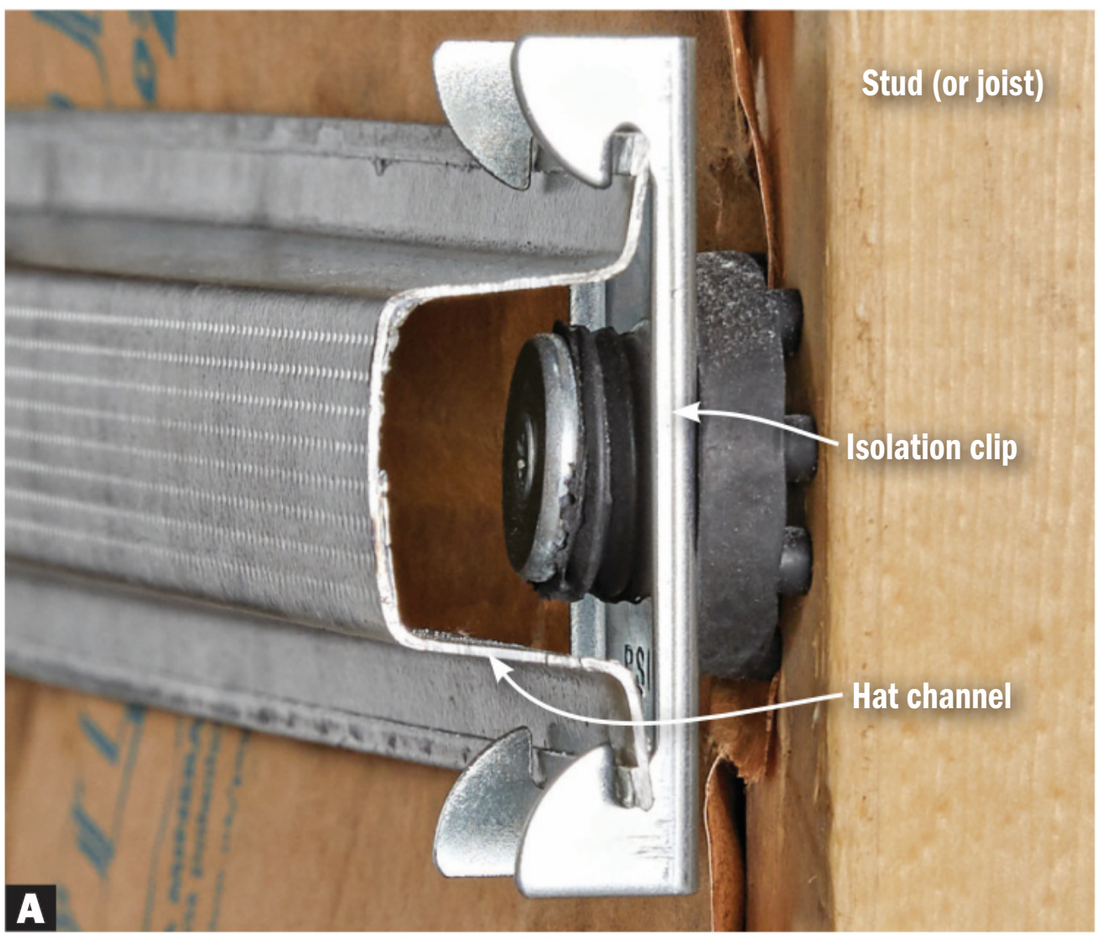

Hat channel mounts perpendicular to joists or studs. Rubber pads on the clips isolate the channel from the wood framing members. Screw drywall to the channel, not to the studs or joists.

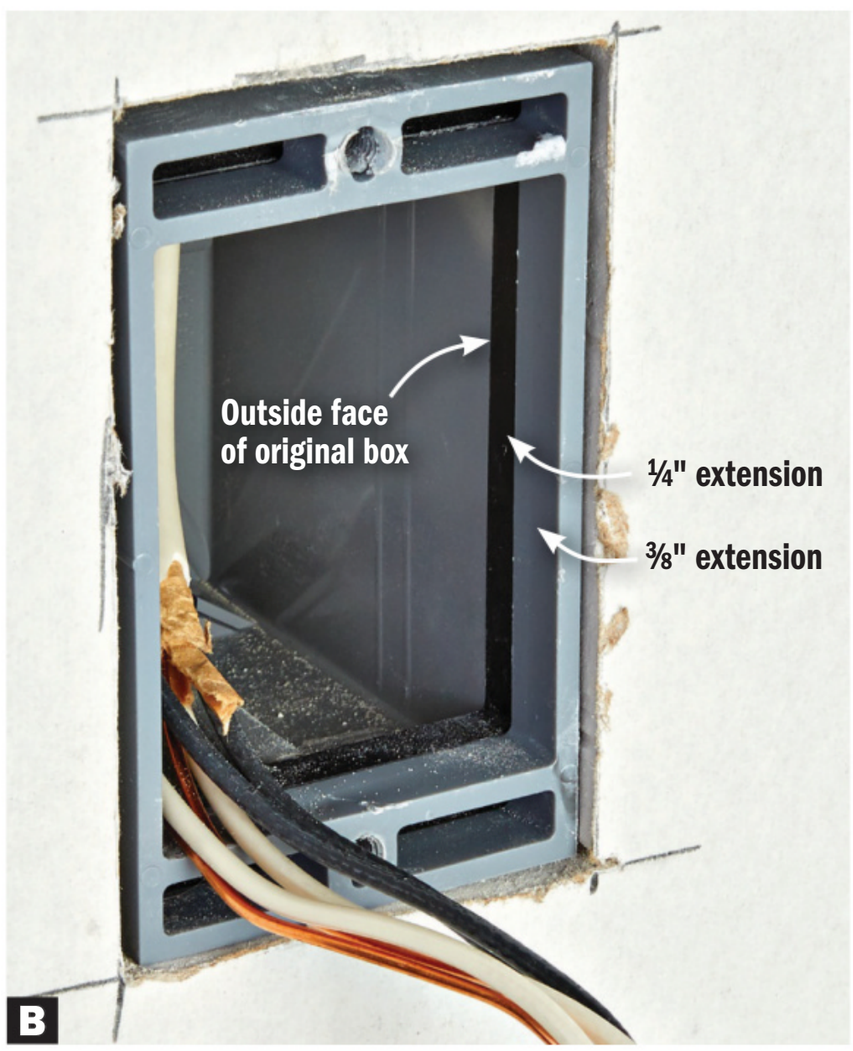

Box extensions slide over receptacles and switches and against the existing box without disconnecting wires. Stack different thicknesses to get the needed depth.

5 ADDING MASS

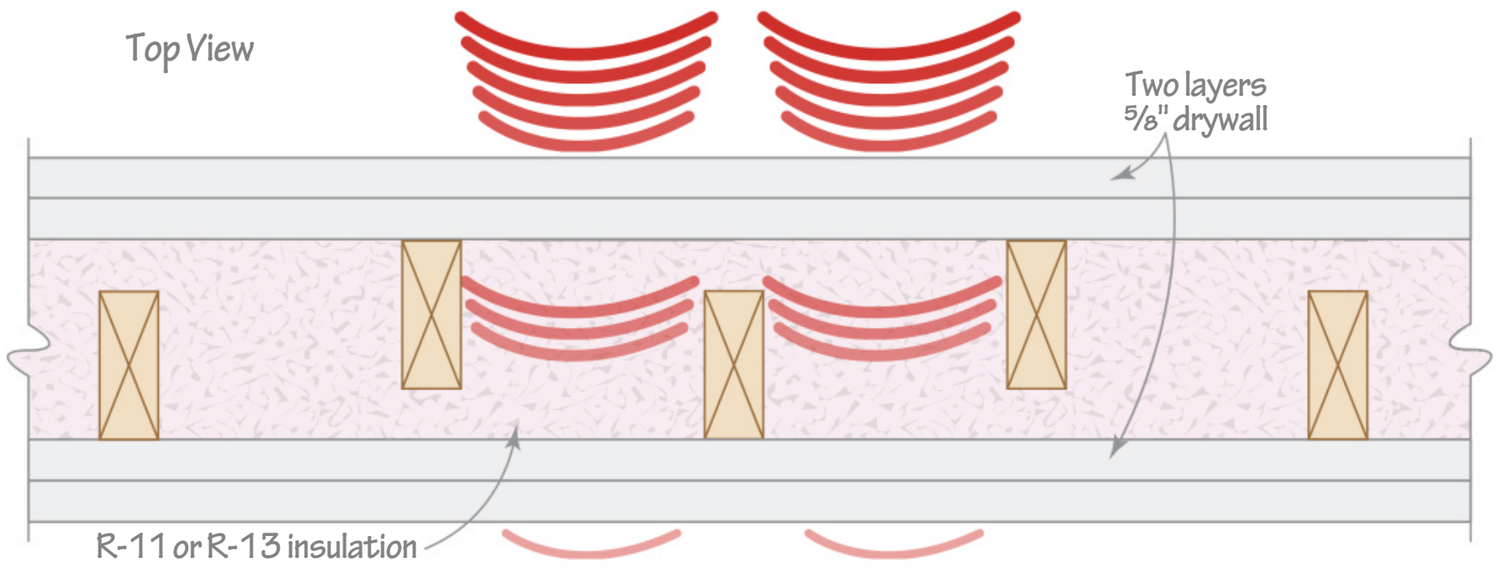

Quiet the inside, fill the gaps

Because sound moves efficiently through the air, any gaps in a wall or ceiling, such as electrical boxes, provide an easy pathway for noise. Wrap boxes with acoustical putty [**Photos C, D**], available at home centers and online sources. Seal the gap between boxes and drywall with a bead of acoustical sealant (available at home centers) from the front, rear, or both.

▶ Acoustical sealant applies like caulking, but stays flexible to absorb sound vibrations.

Before attaching drywall, apply acoustical sealant where the framing intersects adjacent walls, ceiling, and floor. To find remaining gaps, remove the faceplates from switches, outlets, and any HVAC ducts on both sides of the wall. Turn on all the lights in rooms opposite the shop or aim worklights at the walls, and turn off the shop lights and cover any windows. Allow your eyes to adjust to the dark, then scan the shared wall for light leaks. Inspect the length of the wall along corners, the floor, ceiling, and around any wall penetrations, such as ducts and pipes. Seal openings with acoustical sealant, then repeat the process on the opposite side of the wall.

Tip! *You'll spot light leaks better with your peripheral vision, rather than by looking straight at a surface.*

The high-energy sound generated by power tools will still penetrate sealed, separated, and mass-added walls, so install material inside the wall to help dissipate the noise. Regular R-11 or R-13 fiberglass batt insulation between the studs proves the best and, pleasantly, the most affordable option [**Photo E, Drawing 5**].

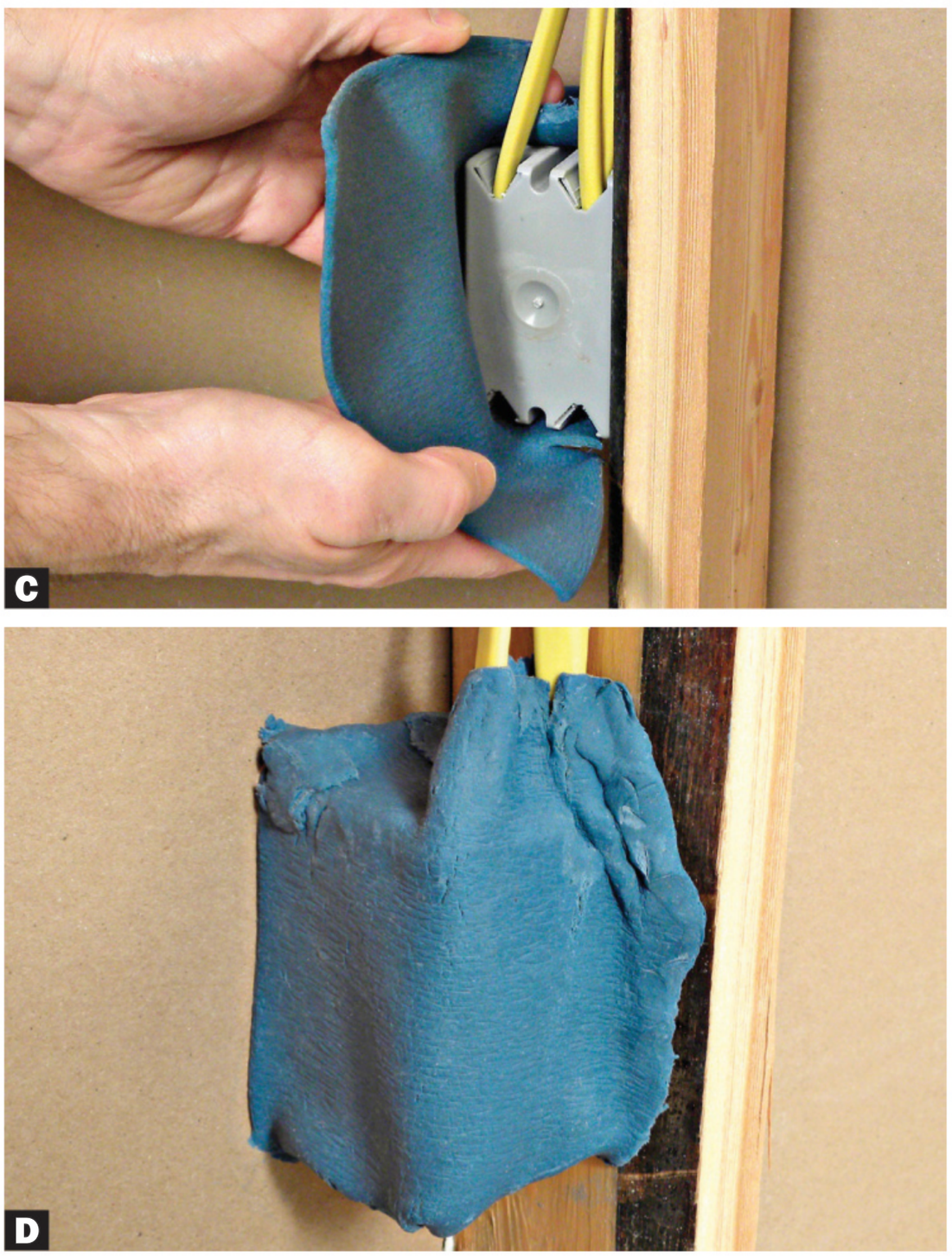

C

D

The 7¼×7¼" squares of acoustical putty feel like stiff modeling clay. One square covers a single-gang box. Use more squares on larger boxes, folding them around the box and wires, sealing openings in the box and absorbing sound that would otherwise leak through.



E

Install batts between studs, as for a typical wall. Avoid the temptation to stuff in more—densely packing the fibers reduces the effectiveness.

Take this vinyl for a spin

Mass-loaded vinyl provides sound-damping mass in a ⅛" or ¼"-thick flexible mat that lies flat or wraps around surfaces. Loosely wrap it around wall and ceiling penetrations, such as HVAC ducts and plumbing stacks, reducing noise that reaches them. Hang it as a curtain over windows and doors, or install it under floor treatments to reduce sound transmission to spaces below. Because the material weighs about 1–2 lbs per square foot, you'll need a helper to move and install it on large surfaces. Order rolls or sheets through home centers or soundproofing companies.

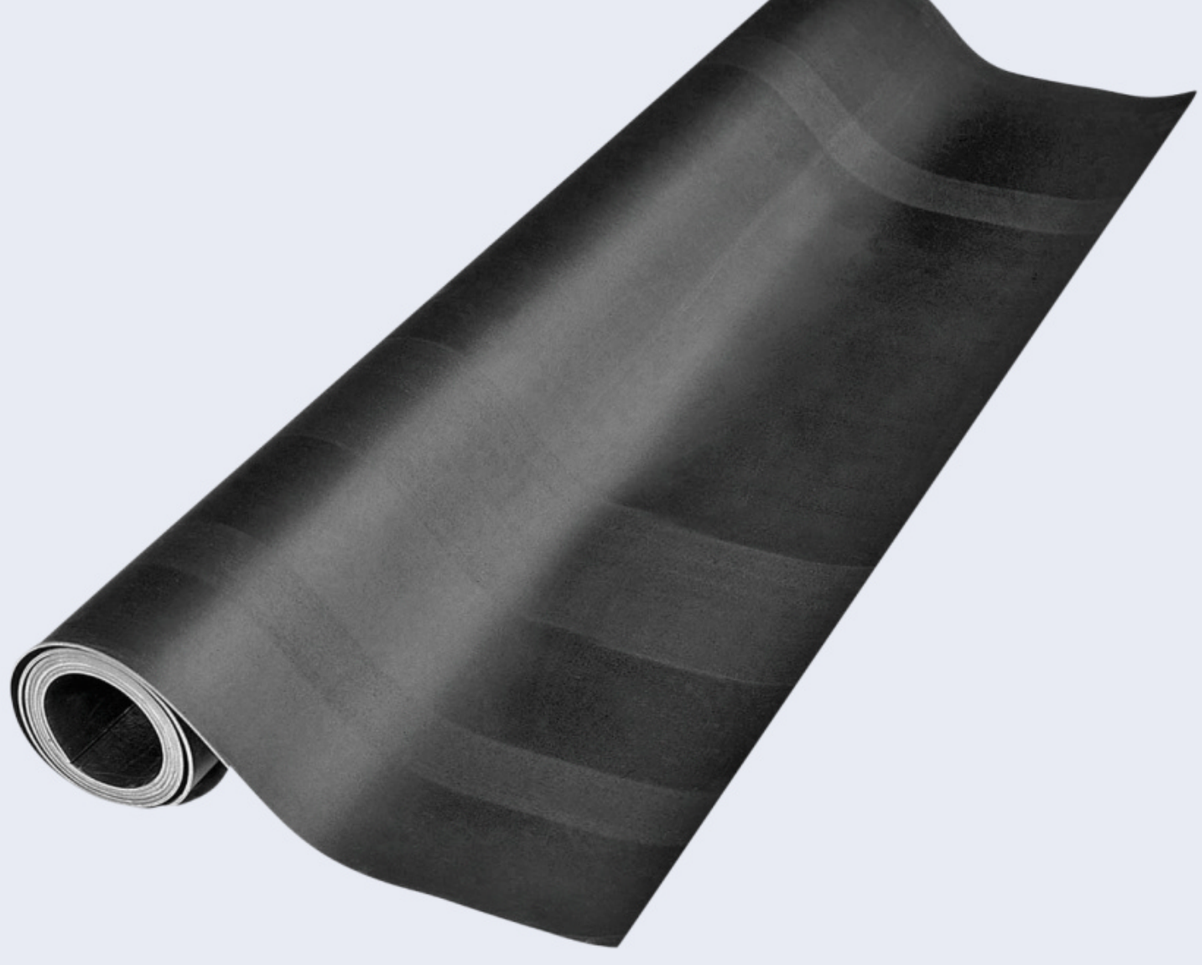

Deal with doors and windows

If small gaps around electrical boxes and framing pose a noise-transmission concern, how do you address door and window openings? The same principles apply as for walls: add mass, decouple, seal openings, and dissipate energy.

Increase mass by replacing hollow-core doors with solid-core doors. If aesthetics don't matter too much, a layer of mass-loaded vinyl [**Take this vinyl for a spin**, *above*] secured to the door can further reduce sound passage, as can screwing a sheet of MDF to the door with a layer of Green Glue between the door and MDF [**What is Green Glue?**, *next page*]. Seal gaps between the door and the stop with weather stripping and a threshhold, or add a self-retracting sweep [**Photos F, G**].

Apply similar strategies to windows. Double- and triple-pane windows provide more mass than single-pane. Fixed-lite windows don't open, so they don't have the sound-leaking gaps of windows that do open. And fill gaps behind trim with insulation, as recommended for doors.

Tip! *Consider prehung exterior-grade doors for interior walls—they come with tight seals between the door and frame.*

Tip! *Remove door trim and loosely stuff batt insulation in gaps between the rough opening and door frame.*



F



G

On a self-retracting sweep, a plunger presses against the hinge-side of the door frame with the door closed, dropping the sweep to the floor. Open the door, and the sweep lifts for easy door operation.

What is Green Glue?

Despite its name, Green Glue noise-proofing compound doesn't act as an adhesive. Rather it serves as a "cushion" between mating surfaces, such as layers of drywall, decoupling them from each other, and reducing noise transmission. Unlike silicone or other types of caulk, it stays elastic, allowing it to dissipate sound energy.

Consider using Green Glue if other strategies listed here create a wall too thick for you. It works well for interiors with a temperature range of 65–85°F, but can add significant cost to a job—recommended application is two 28-oz tubes per 4×8' sheet of drywall, and each tube costs around $25. Search online or visit greengluecompany.com to find distributors.



Staggered-stud and double walls provide enough depth for installing two doors or windows facing each other in the same frame, providing additional mass and decoupling. Prehung doors will mount as usual in a double wall; the shallower depth of a staggered-stud wall requires more creative framing and trimming methods that may involve hanging the second door on the jamb of the first, or installing prehung doors to stand proud of the finished surface. Consult a contractor or finish carpenter if needed. Because the doors fit close to one another, the two interior faces may require low-profile knobs.

Overhead garage doors prove problematic, especially if you want them to remain operable. An insulated door without windows absorbs sound better than a thin metal or fiberglass door. Attaching a layer of foam insulation board to the interior helps dissipate sound, without adding excessive weight. Chamfer the mating edges so they don't bind as the door panels round the bend in the track. Installing a movable curtain of heavy moving blankets or mass-loaded vinyl near or against the door further reduces noise, and still allows access. If you can live with reduced or no access, add a wall just inside the door, either of temporary or permanent construction, using the methods previously discussed.

Containing the whine of tools ensures that those around you will look forward to the projects that come out of your woodshop rather than dreading the noise.

Tip! *Eliminate a hole in a door by replacing a traditional doorknob and latch with a handle, and adding a closer or self-closing hinges.*

Source: Resilient sound isolation clips no. RSIC-1, box of 50, $240, Acoustical Solutions, 844-960-1114, acousticalsolutions.com.

Produced by **Craig Ruegsegger**
Illustrations: **Roxanne LeMoine, Lorna Johnson**

AccuMASTER™

Precision Woodworking Tools



Your Solution to Fine Building

2-in-1 Digital Angle Gauge

- Find true level
- Precisely check angles
- Accuracy of ±0.2° *Model 7434*

Digital 7" Angle Finder Ruler

- Full 360° protractor • Accuracy of ±0.3°
- 7-inch stainless steel rulers *Model 7455*

amazon ★★★★★

CALCULATED INDUSTRIES®

For a dealer near you call **1-800-854-8075**
or go to **calculated.com**



All-in-one Tablesaw/ Router Station

Downloadable plan only $9.95

woodstore.net/allinone

"Better than we even hoped it would be!!!"



Trustpilot ★★★★★

"My husband was tired of lifting off bags and dumping numerous times during cutting the yard and I was tired of raking leaves around plants and other obstacles, putting them on a tarp or wheelbarrow and hauling them off.

The first day we used our new Cyclone Rake the yard was cut, leaves vacuumed and dumped all in a matter of hours instead of an entire day of backbreaking work.

Both my husband and I highly recommend this product and their customer service.

We love our Cyclone Rake!!"

Elizabeth C.

Cyclone Rake

Get Your FREE INFO KIT to learn more!

Call: 1-800-815-0014 or Visit: CycloneRake.com

The Cyclone Rake is shown with optional Mower Deck Adapter abd Roof Rack Carrier. Mower not included. ©2021 Woodland Power Products, Inc. • 72 Acton Street • West Haven, CT 06516

Convex Curve Cutter®



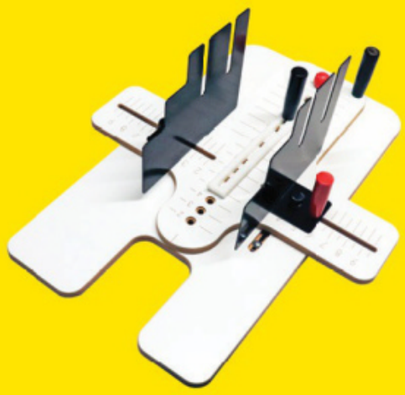

Free shipping contiguous U.S.

Beautiful curves are so Easy... ...with your Bandsaw and the CCC!

See it in action at
convexcurve.com

MADE IN USA

A feast for your eyes!

Optical Illusion Cutting Board

Downloadable Plan



woodstore.net/illusion

Oneida® Air Systems

The Industry Leader in Dust Collection

SUPERCELL®

THE WORLD'S FIRST UNIVERSAL DUST COLLECTOR

Combines a high-CFM dust collector AND a high-pressure system in one revolutionary design.

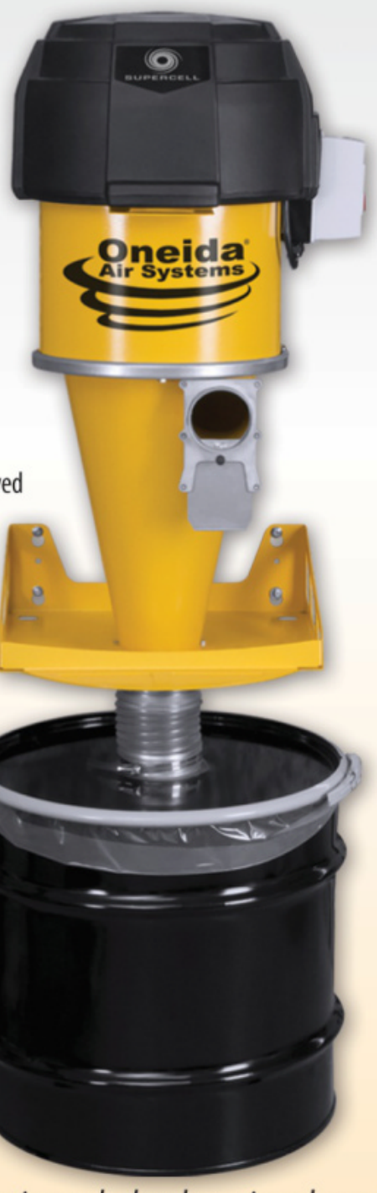

U.S. Pat.
9125535
8393050
8377160
ETL Approved

Shown with 35 gal. drum

Best Dust Collector
Popular Mechanics - 2020 Tool Awards

A Top Tool of 2020
Popular Woodworking - Nov. 2020

"A boss of a dust collector"
Fine Woodworking - Aug. 2020

Best Dust Collection Product of 2020
FDMC Magazine - Dec. 2020

- Exceptional performance across all tools with 1" to 5" ports
- 10x the suction of standard dust collectors
- HEPA filter with pulse cleaner
- Small profile, industrial quality
- The most awarded dust collector ever made

Mobile option and other drum sizes also available.

Upgrade the Supercell with our modular Quick-Clamp Ductwork Kit (shown below) to connect to multiple tools simultaneously.



800-732-4065
oneida-air.com

MADE IN USA SINCE 1993

Precision on the go

For precisely drilled holes, you can't beat a drill press if the workpiece fits on it. So if you don't own a drill press, but have a portable drill, investing in one of these drill guides will help you achieve the same accuracy. All three feature V-groove holders to center the drill bit on round stock, such as dowels or chair stretchers.



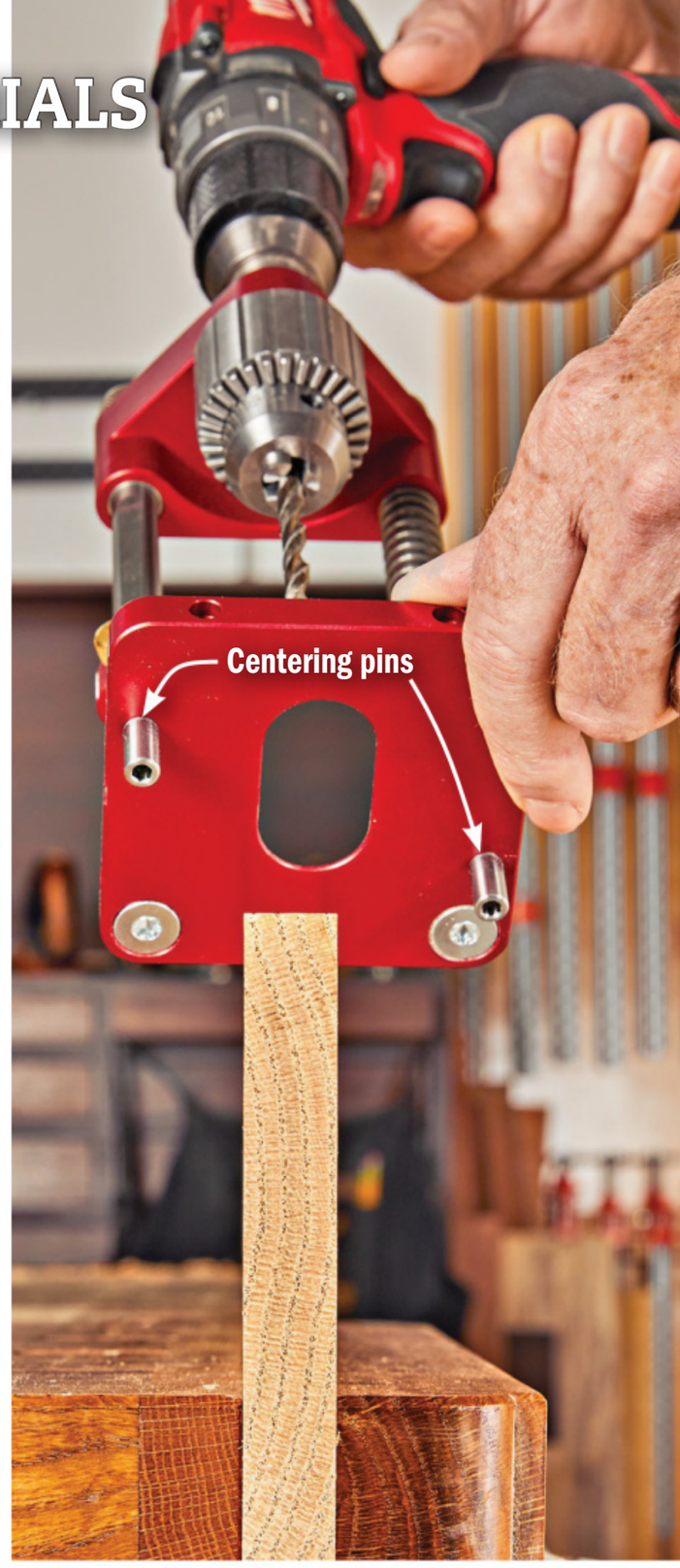

Woodpeckers Auto-Line Drill Guide

No. ALDG-21, $260
Maximum plunge depth: 4¾" with spring installed; 5⅛" with spring and depth stop removed

Despite a shorter plunge capacity than the guides shown *below* (albeit plenty and on par with a drill press), this well-made aluminum and steel guide proved to be our favorite. The ½" chuck mounts to an assembly that slides up and down the guide rods with a silky smoothness; the column spring easily returns the head without excessive resistance when plunging. The base's four etched alignment marks make it easy to center the bit on a crosshair layout mark. Although its 1" base opening limits bit size, you can remove the chuck assembly, turn it 180°, and reinstall it so the chuck is now on the back of the guide, allowing you to drill holes up to 2". A pair of pins thread into the base (*above right*) for drilling perfectly centered, no-measure holes in the edge of a workpiece. It's also the only model we tested that comes with an edge guide that replicates the fence of a drill press, helping you drill multiple holes the same distance from a workpiece edge.

800-752-0725, woodpeck.com

Rockler Portable Drill Guide

No. 52885, $180
Maximum plunge depth: 8⅞" with depth stops removed



Like the Woodpeckers model, this guide is also well-made from aluminum and steel, and provides a ½" chuck and centering pins. The head glides smoothly, but without a return spring the drill drops unless you tighten the locking knob, making it more tedious to line up a bit to a layout mark. The base has a large opening, but etched alignment marks in only one axis. The guide tilts up to 60° with marks in 5° increments, making drilling angled holes a breeze. A rubbery pad on the base's bottom prevents scooting.

800-279-4441, rockler.com

Milescraft Drillmate

No. 1318, $38
Maximum plunge depth: 6¼" with spring installed; 8¼" with spring and depth stop removed

You can't beat the value of this sturdy guide. It has plenty of vertical travel and a large bit opening, but only a ⅜" chuck. Rubber feet on the base prevent scooting, but we wish it had markings to line up a bit. The head tilts to stops at 75°, 60°, and 45°, and although accurate, we found this process clumsy.

224-236-2532, milescraft.com



continued on page 74

DOWELMAX

PRECISION ENGINEERED JOINING SYSTEM



- Dresser Project Designed and Built by Dowelmax Inventor with 100% Dowel Construction
- For More Dowel Construction Project Articles and Videos Visit Gallery of Projects at www.dowelmax.com
- Our Unequivocal Guarantee: Wood Joints Stronger than a Comp. M&T or Domino Joint
- Accuracy is Directly Prop'l. to Joint Strength

- Not a Dowel Jig - A Comprehensive & Versatile Tool
- Hundreds of Functions, and Infinitely Adjustable
- Adapts to Any Length, Width, or Thickness of Stock
- Introduce Sound Engineering into Your Woodworking

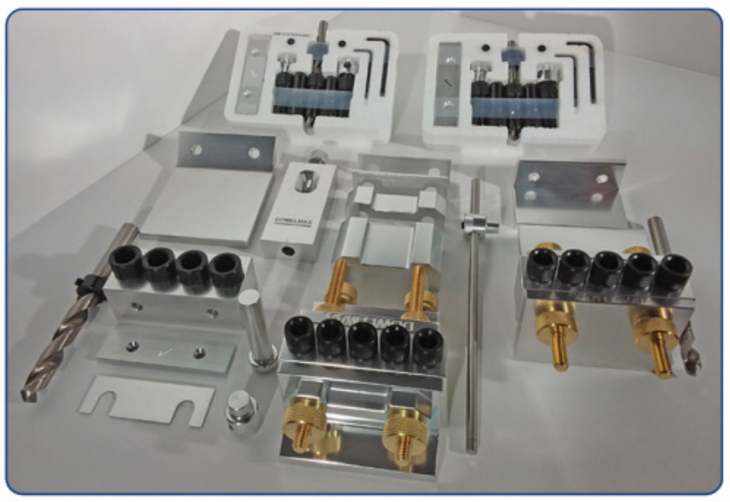

Call 1.877.986.9400 or visit dowelmax.com

Never lose electricity again!



Own the #1 brand in home standby power.

USA ENGINEERED & BUILT*

*Built in the USA using domestic and foreign parts.

8 out of 10 buyers choose Generac Home Standby Generators to automatically provide electricity to their homes during power outages. GENERAC Home Standby Generators start at just $1,999.*

CALL for FREE Generator Buyer's Guide and get...

Limited Time BONUS OFFER!

GENERAC®

TOLL FREE **800-795-5639**

FreeGeneratorGuide.com

*Price does not include installation.

Moisture Meters

Dependable - Accurate - Built-to-last

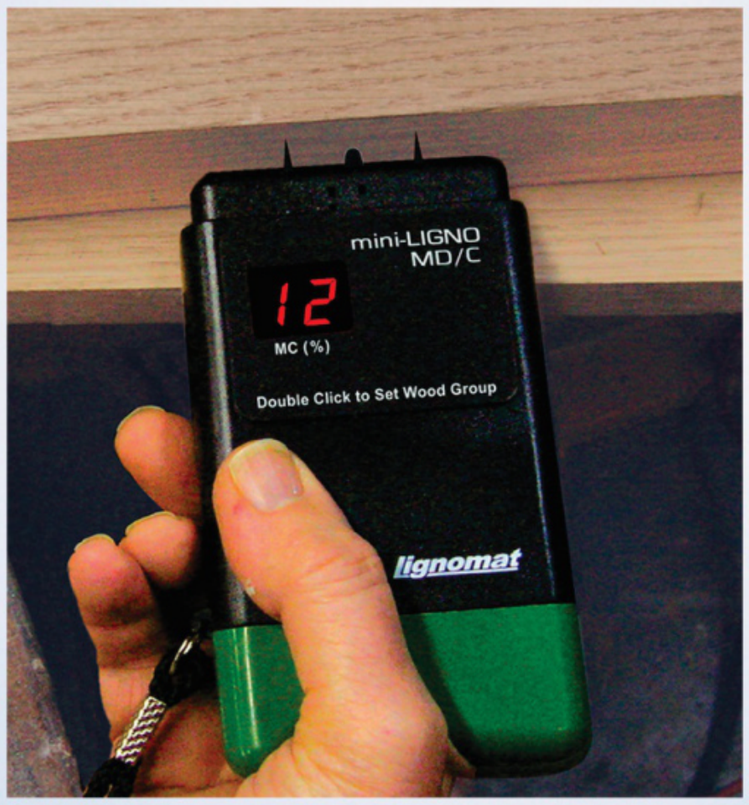

Pin Meter Versatility:

Measures flat boards, round and oddly shaped work pieces.

Everything woodworking.

Order as **#MD-1.**

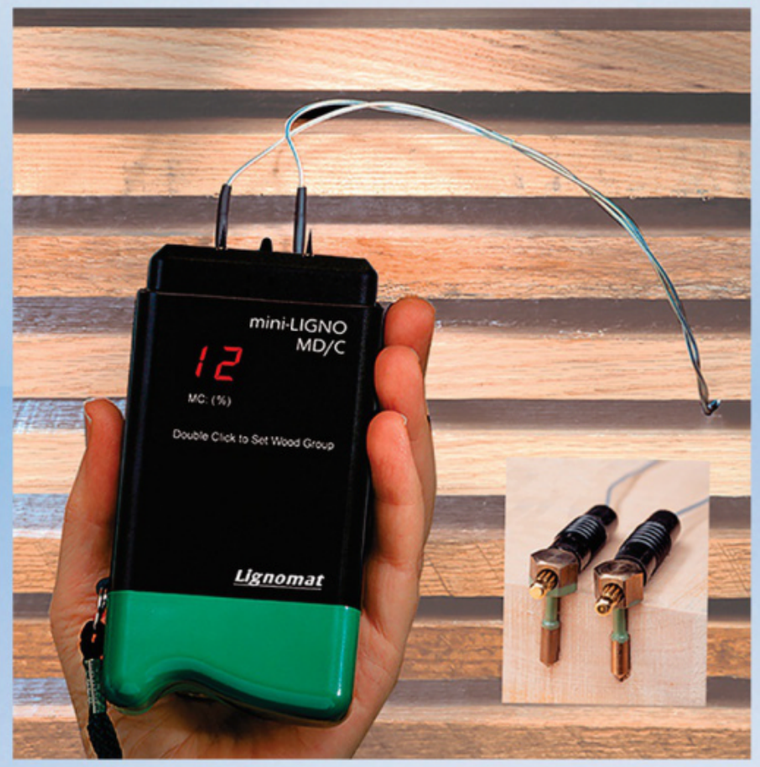

Pin Meter Versatility:

Add cables and probes to your meter.

Monitor your kiln from the outside.

Fast and easy.

Order as **#MD-11.**



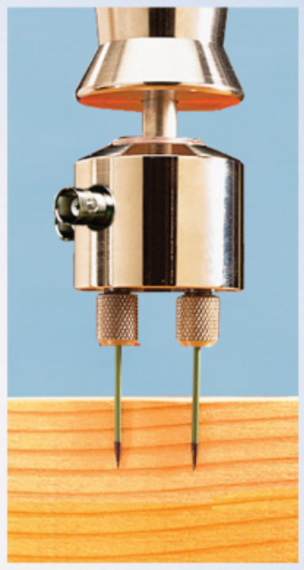

Order Package as **#MD2-M.**

Add slide-hammer for core measurement in thick wood.

Lignomat **Call 800-227-2105**

www.Lignomat.com



Cordless tracksaw cuts with the power of a cord

5½" 18-volt tracksaw, no. GKT18V-20GCL14, $650

Bosch's 18-volt tracksaw impressed me with its power, accuracy, and cord-free convenience. This saw cuts through sheet goods and solid hardwoods like a corded saw without bogging down. And the runtime exceeded my expectation: In tests, it cut 267' of ¾" plywood on a full charge, thanks to its included 8.0-amp-hour battery pack and brushless motor. The motor has six speeds and an "eco" mode (intended to conserve battery runtime); I found these features irrelevant for a woodworking shop.

This saw lacks an antisplinter guard, but the 42-tooth blade cuts cleanly with little tear-out, and the track's rubber edge helps reduce splintering. The included dust bag does a decent job, but connecting the saw to a vacuum captured nearly all the dust.

This saw mounts to its proprietary aluminum track via a thin, raised rib (inset photo, *above*), so it will not work with other brands of track. On the saw's base, two adjusters let you snug the fit on that rib to eliminate any wiggle. Despite the 5½" blade, you can still cut up to 2⅜" deep. The cut-depth limiter adjusts easily, with inch and metric scales, and the saw tilts from -1° to 47° for making bevel cuts.

Tracks sell separately in four sizes, ranging from 31" (no. FSN800, $79) to 83" (no. FSN2100, $199). Connectors and clamps also sell separately.

—Tested by Bob Hunter, Tools Editor

Bosch
877-267-2499, boschtools.com



Can pocket holes get any easier? Yes, they can!

Pocket-hole drilling jig, no. KPHJ720, $130; no. KPHJ720PRO (shown), $150

Give the folks at Kreg Tool credit: They keep trying to improve on the already-easy process of drilling pocket holes. And their new 720 series of jigs makes the process nearly foolproof by taking the guesswork and measuring out of clamping your workpiece. With these jigs, you place a workpiece from ½" to 1½" thick in the jig, press the drilling guide block down against the workpiece, then lock the handle—it self-sets the clamping pressure. Should you need just a little more grip, twist the tension adjuster. I like the dust collection this jig provides, better than previous models.

The 720 comes with a drill bit, two driver bits, dust-collection port and adapter, and a sample of screws. For just $20 more, I'd get the 720 Pro, which includes those accessories plus storage containers that connect to the jig and serve as workpiece supports, a clamp to secure the jig to the workbench, a movable stop for drilling repeatable holes, and a larger selection of screws.

—Tested by John Olson, Design Editor

Kreg Tool
800-447-8638, kregtool.com

continued on page 76

Do it Right with DR®

Make Yard Cleanup EASY with a Chipper Shredder!



- CHIP big branches up to 5" thick
- SHRED lighter yard and garden waste
- REDUCE it all to a fraction of its original volume

DRchipper.com

Trim and Mow the EASY Way!



- TRIM fencelines & perimeters
- MOW waist-high grass and weeds
- 5X the power of hand-held trimmers
- Self-propelled models
- Gas- or battery-powered

DRtrimmer.com

World's Most POWERFUL Leaf Vacuum!
DR® Leaf & Lawn Vac





Tow-Behind

- Rated #1 in vacuum power
- Huge capacity up to 321 gals.
- Folds flat for storage

Walk-Behind

- For landscaped or smaller properties
- Easy on/off 8-bushel collector bag
- Self-propelled models available



DRleafvac.com

America's Original Field & Brush Mower



- Mow grass up to 8' high
- Cut brush up to 3" thick
- Engines up to 22 HP
- Decks up to 34" wide
- Power steering

DRfieldbrush.com



World's Fastest Splitters!

- Cycle times of just 1-3 seconds
- Proven rack & pinion technology
- 10- to 34-ton splitting force
- Electric models available for splitting wood indoors or out



DRlogsplitter.com

SALE!

Including
FREE SHIPPING | EASY FINANCING
Some limitations apply. Go online or call for details.

GoDRpower.com

Request your FREE PRODUCT CATALOG
Online or Toll-Free at 877-201-9888

PROFESSIONAL POWER DR DONE RIGHT



Vary feed rates to suit the wood or the finish

15" 3-hp planer, no. SB1108, $3,545

South Bend's new 15" planer comes with an insert cutterhead equipped with 52 carbide inserts. With variable feed rates from 10 to 28 feet per minute, you can speed up for dimensioning cuts, and then slow down for the final passes (more cuts per inch). This machine also has a digital thickness scale, cast-iron infeed and outfeed tables, and three drive belts.

South Bend Tools
360-734-1540, southbendtools.com

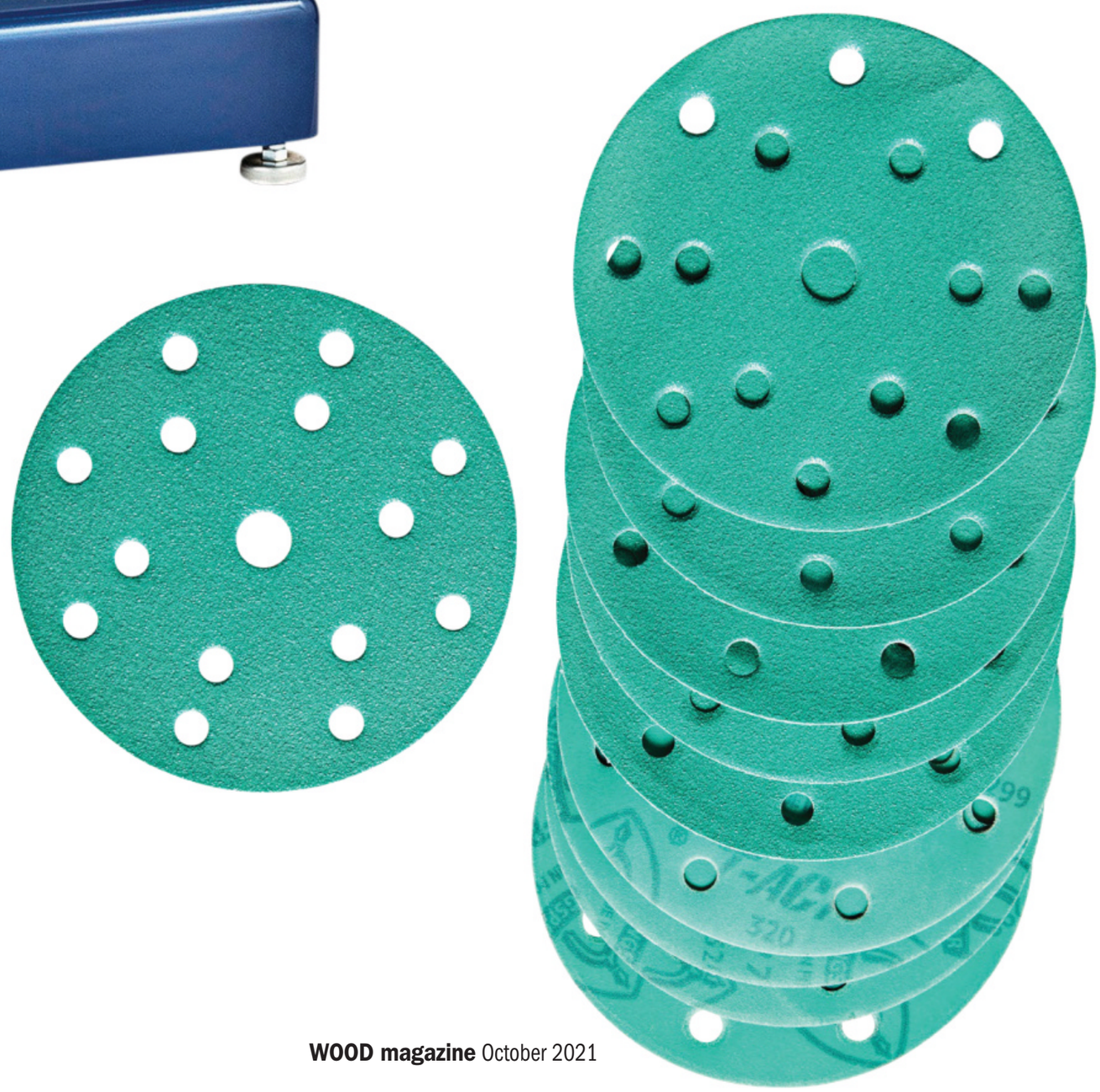

New abrasive promises better sanding

GreenTec abrasive sanding discs, sold in multiple sizes, styles, and quantities

Klingspor's GreenTec sanding discs use a new "T-ACT" coating that the company says provides more abrasive-grain exposure, reduced heat buildup, and less loading than traditional stearate abrasives. This means, Klingspor's says, longer life and cooler sanding temperatures for sensitive coatings, such as epoxies.

Klingspor's Woodworking Shop
800-228-0000, woodworkingshop.com

Quilter's Paradise Project Bundle

15 downloadable plans for the quilt lover in your life.
Quilt racks, material storage, and workstations

Only $25











woodstore.net/quiltersparadise



Get this with your money
at a typical auto parts store.



Or ALL this at
www.RockAuto.com!

ROCKAUTO.COM
ALL THE PARTS YOUR CAR WILL EVER NEED.

✓ Reliably Low Prices
✓ Easy To Use Website
✓ Huge Selection
✓ Fast Shipping

Powermate® Portable Generators

Easy to use. Innovative. Reliable.

POWERMATE®

plus Chippers, Log Splitters, Pressure Washers and more...

powermate.com

Woodworkers of Texas
PRESENTS

HOUSTON WOODWORKING SHOW

Sept. 10–12, 2021

Friday & Saturday 9am–6pm
Sunday 11am–4pm

Shrine Arabia Temple
10510 Harwin Dr.
Houston, Texas 77242

Come and Enjoy
Texas' 1st and Largest
Post-COVID Show

65 Plus Vendors! Showcasing:

TOOLS & EQUIPMENT
SHOP ACCESSORIES
SAFETY ITEMS
WOOD & SLABS FINISHING
CNC/LASER MOLDS - EPOXY
ADHESIVES - ABRASIVES

Special Feature:

Turning of Pens to Support Our Veterans
We Will Help You as Needed
Turn a Second Pen to Keep

Admission $12
Good for ALL 3 days

For more information, contact
Woodworkers of Texas
713-503-2284
woodworkingshowoftexas.com

NU-LIFE
Pitch and Resin Remover
Cleans sanding belts for wide belt sanders.
Cleans paper or cloth belts instantly.
abrasiveservice.com

Water Based
Non-Flammable
Biodegragable
SNAP & GO!
ABRASIVE SERVICE COMPANY
ORDER NOW





866.948.2185
woodmizer.com/localsawmills

American
FABRIC FILTER

A NEW FILTER WILL MAKE YOUR OLD DUST COLLECTOR WORK LIKE NEW!

CYCLONES, STAND-ALONES, BAGHOUSES & MORE



+ Optimum Performance
+ Low Maintenance
+ Custom Designs
+ Cleaner Air
+ Longer Life
+ Economical
+ Best Size & Fit
+ Proudly Made In USA

6 MIL POLYBAGS IN STOCK

CALL TODAY!
(800) 367-3591

www.americanfabricfilter.com

SCHLABAUGH
AND SONS

Woodworking Supplies
Clocks Parts
Toy Supplies and More!

Visit SchSons.com to learn more



WOOD GLUE
TOUGH
No Foam
100% WATERPROOF
GLUE



100% WATERPROOF · Type I · OPEN TIME UP TO 15 MINUTES · Extended Working Time · ALL-WEATHER · Our Most Durable Wood Glue

JET-KLEEN™
MADE IN THE USA
Series of Personnel Blow-off & De-dusting Systems

PERFORMANCE & PROTECTION

Safer but with the same performance as compressed air. Great for blowing off wood chips, metal flakes and other debris from persons, clothing and all surfaces.



specializedsafetyproducts.com
773.777.7100 | sales@specializedsafetyproducts.com

Woodworker's Marketplace

What's Ahead

A GLIMPSE INSIDE THE NOVEMBER ISSUE (ON SALE OCTOBER 8)

Nesting desk and credenza
On work-from-home days, separate the desk and credenza to instantly expand your working area. At the end of the day, slide them back together and effectively hide the home office.





Heirloom child's rocker
Your descendants will fight over this handsome rocker for generations, thanks to its classic styling and stout construction.



Must-have hand tools
WOOD® magazine staff and contributors compiled this list of the hand tools you should buy first, and we explain why.

Ring presentation box
Better buy a better ring, because this gorgeous box may outshine its contents when you pop the question.

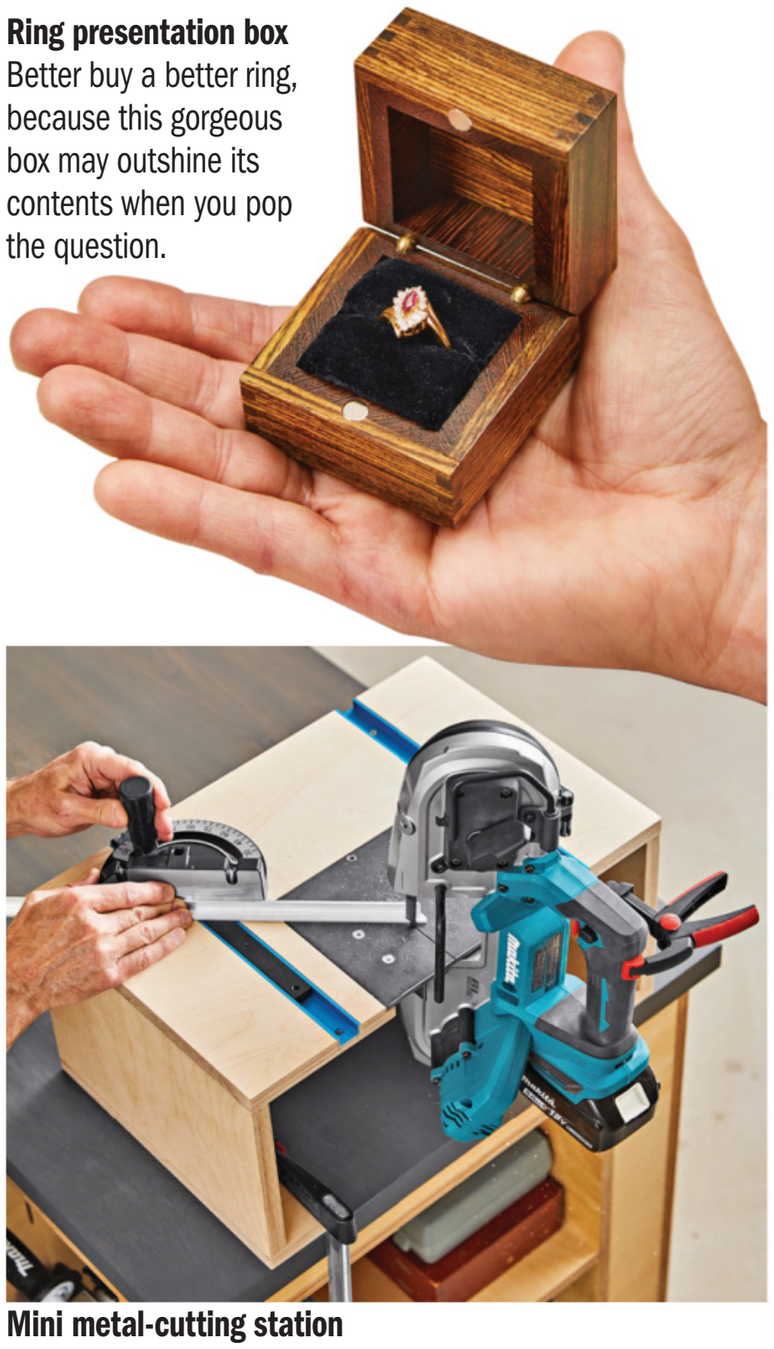

Mini metal-cutting station
Bag your hacksaw: This precision unit cuts metal parts, such as angle iron and continuous hinges, faster and cleaner.

Better Homes & Gardens® WOOD® magazine (ISSN-0743-894X); October 2021, Volume 38, No. 5, is published 7 times a year in March, May, July, Sept, Oct, Nov, Dec/Jan by Meredith Corporation, 1716 Locust Street, Des Moines, IA 50309-3023. Periodicals postage paid at Des Moines, IA, and at additional mailing offices.
Subscription prices: $29.99 per year in the U.S.; $44.99 (U.S. dollars) in Canada; $49.99 (U.S. dollars) overseas. Your bank may provide updates to the card information we have on file. You may opt out of this service at any time. POSTMASTER: Send all UAA to CFS. (See DMM 507.1.5.2); NON-POSTAL AND MILITARY FACILITIES: Send address corrections to Better Homes & Gardens WOOD, PO Box 37508, Boone, IA 50037-0508. In Canada: mailed under Publications Mail Sales Product Agreement No. 40069223; Canadian BN 12348 2887 RT. © Meredith Corporation 2021. All rights reserved. Printed in the U.S.A.

GET A FREE FACE CLAMP WITH PURCHASE!
AVAILABLE SEPTEMBER.

ARMOR™ TOOL

SELF-ADJUSTING DRILL GUIDE

SELF-ADJUSTING DRILL BIT COLLAR

COLOR-COAT™ SCREW SYSTEM

PUSH BUTTON LOCKING MECHANISM

OPEN CAMERA

THE NEW SELF-ADJUSTING MINI-JIG

The new Mini-Jig offers One-Step Setup and Optimal Portability. By simply grabbing the material with the caliper, the **Mini-Jig will automatically adjust the Drill Guide Block and Drill Bit Collar** to the correct depth based off the material thickness, while matching the perfect screw length with our Color-Coat™ System.

1. PUSH THE BUTTON
Grab Your Material.



2. AUTOMATIC ADJUSTMENTS
Based On Material Thickness.



3. CLAMP & DRILL
No Adjustments Needed.



For More Information Visit: ARMOR-TOOL.COM

@armortool @armor_tool armor tool

TACKLE A VARIETY OF CUTS FROM ONE PROJECT TO THE NEXT

JET BANDSAWS

JET RED ASSURANCE®

FOR MORE INFORMATION AND TO FIND A DEALER NEAR YOU VISIT JETTOOLS.COM

550+ SERVICE CENTERS NATIONWIDE | INDUSTRY-LEADING WARRANTIES | EXPERT TECHNICAL SERVICE

@JET.WOODWORKING @JET_WOODWORKING @JET.WOODWORKING

JPW INDUSTRIES

STAND BEHIND YOUR WORK™

JET